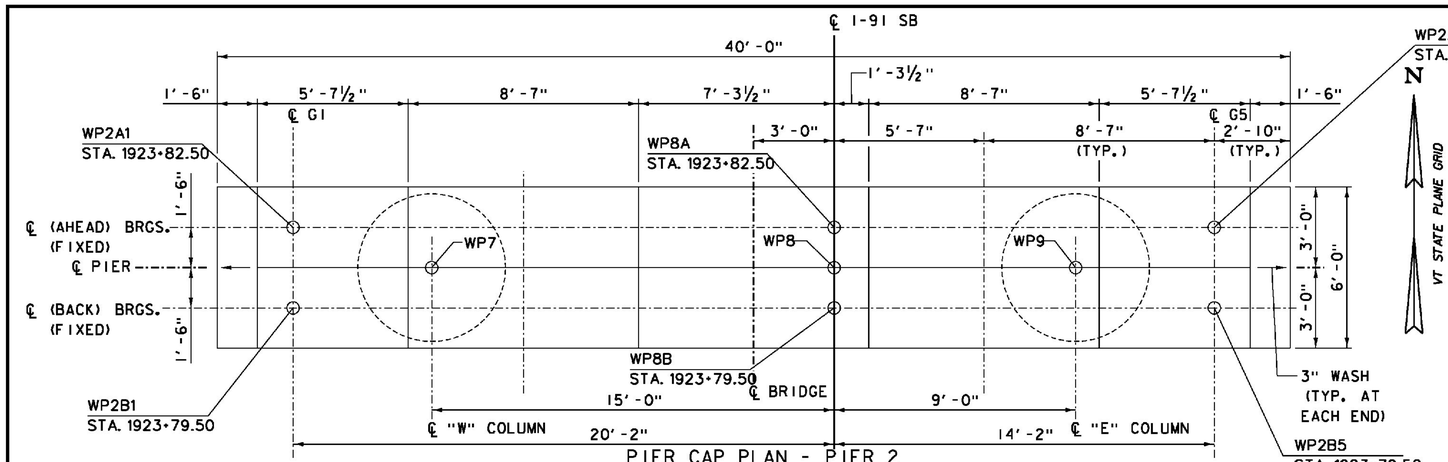

PIER CAP PLAN - PIER 2

SCALE ⅜" = 1'-0"

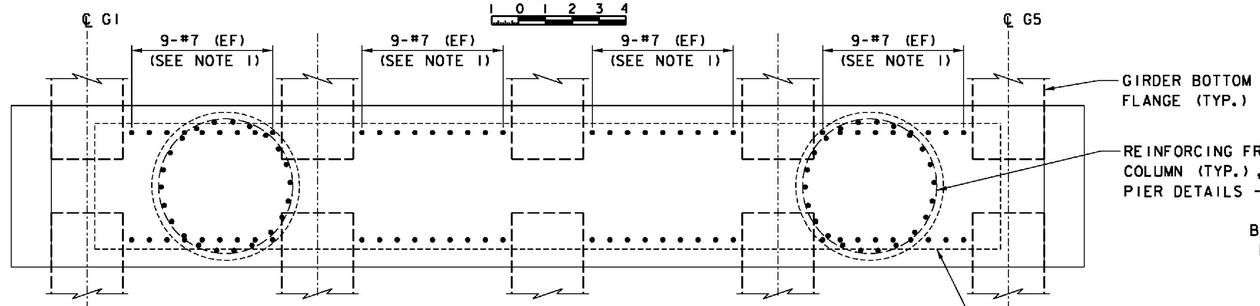

PIER CAP REINFORCING PLAN - PIER 2

SCALE ⅜" = 1'-0"

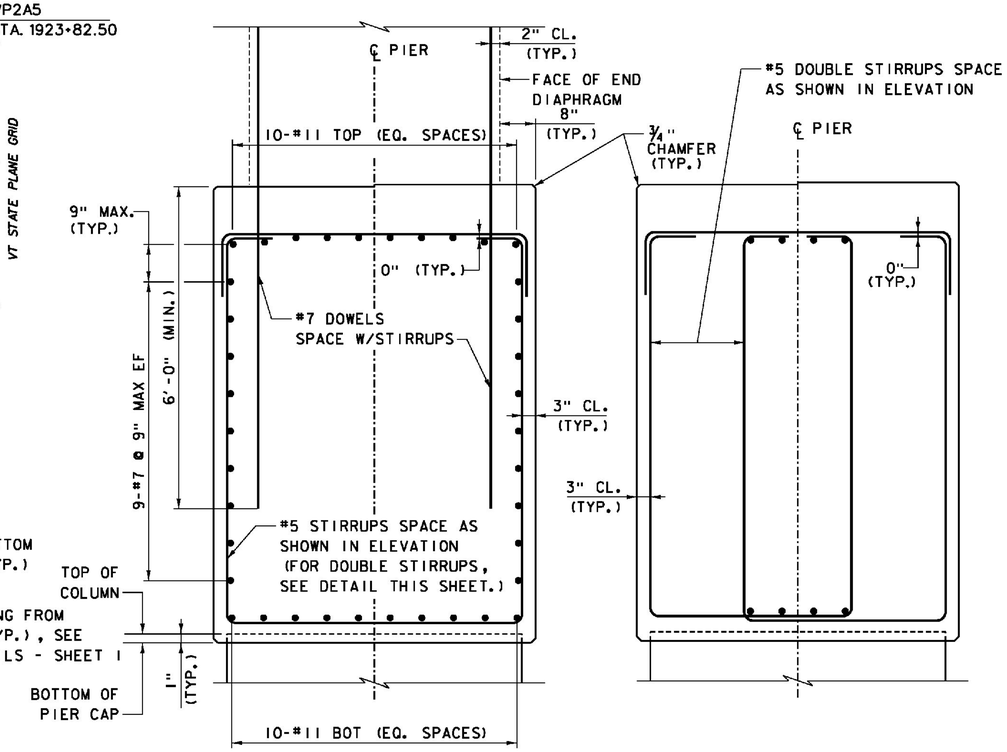

TYPICAL PIER CAP REINFORCING SECTION
PIER 2

SCALE ¾" = 1'-0"

DOUBLE STIRRUP DETAIL
PIER 2

SCALE ¾" = 1'-0"

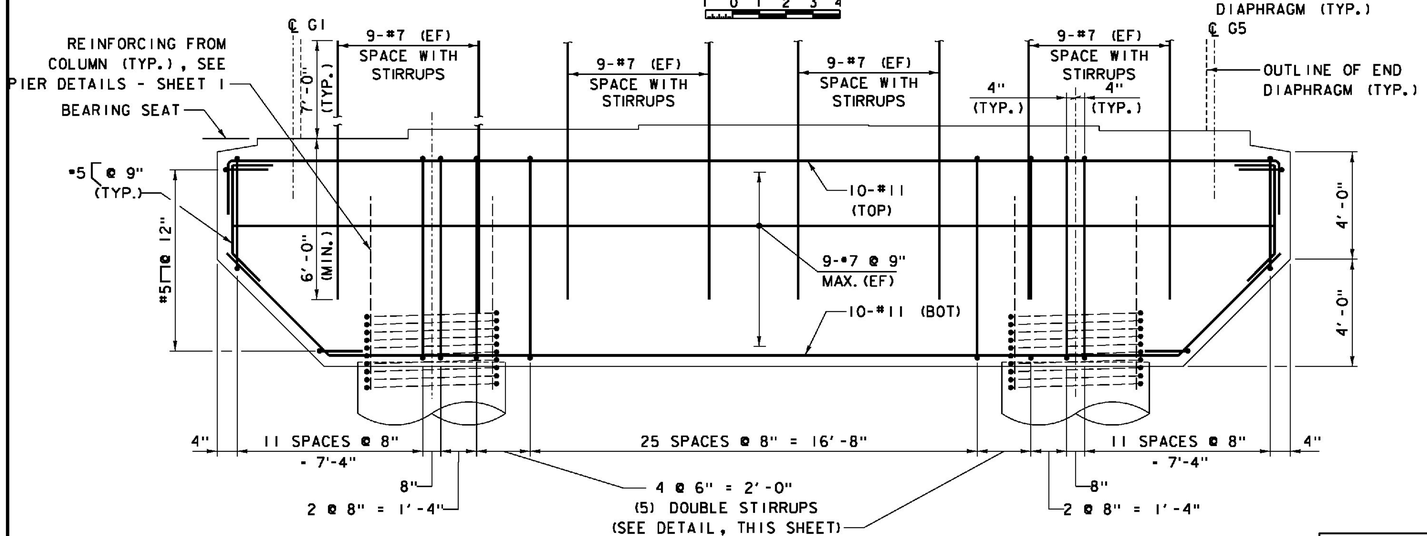

PIER CAP REINFORCING ELEVATION - -PIER 2

SCALE ⅜" = 1'-0"

NOTES:

1. REINFORCING STEEL DOWELS EXTENDING FROM PIER CAP INTO END DIAPHRAGM SHALL BE SPACED WITH STIRRUPS AS SHOWN. NINE DOWELS SHALL EXTEND FROM CAP BETWEEN BOTTOM FLANGES OF ADJACENT GIRDERS ON EACH SIDE OF CAP. ADJUST TO AVOID INTERFERENCE WITH COLUMN REINFORCING AS REQUIRED.

WORKING POINT CONTROL

PIER	POINT NO.	STATION	NORTHING	EASTING
2	WP2B1	1923+79.50, 20.17' LT.	347524.6779	1665070.2879
	WP8B	1923+79.50, CL	347524.2786	1665090.4506
	WP2B5	1923+79.50, 14.17' RT.	347523.9982	1665104.6145
	WP2A1	1923+82.50, 20.17' LT.	347527.6773	1665070.3473
	WP8A	1923+82.50, CL	347527.2781	1665090.5100
	WP2A5	1923+82.50, 14.17' RT.	347526.9976	1665104.6739

ITEMS USED ON THIS SHEET

ITEM NO.	DESCRIPTION
501.34	CONCRETE, HIGH PERFORMANCE CLASS B
507.17	EPOXY COATED REINFORCING STEEL
900.635	STAINLESS STEEL REINFORCING

PROJECT NAME: WINDSOR
PROJECT NUMBER: IM 091-1(64)

FILE NAME: z10a188PD3.dgn
PROJECT LEADER: J. WILSON
DESIGNED BY: S. BOYINGTON
SB PIER DETAILS - SHEET 3

PLOT DATE: 7/30/2015
DRAWN BY: S. GUNN
CHECKED BY: S. HALLORAN
SHEET 116 OF 156