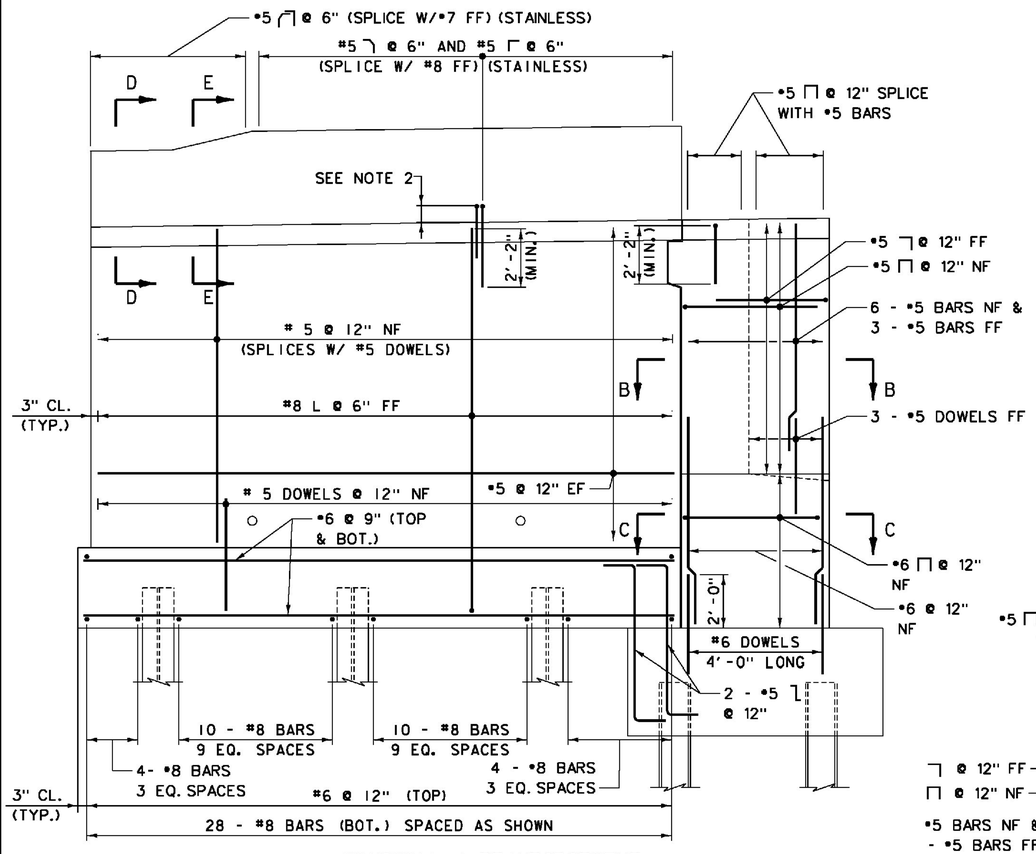

WINGWALL 1 REINFORCEMENT

SCALE 3/8" = 1'-0"

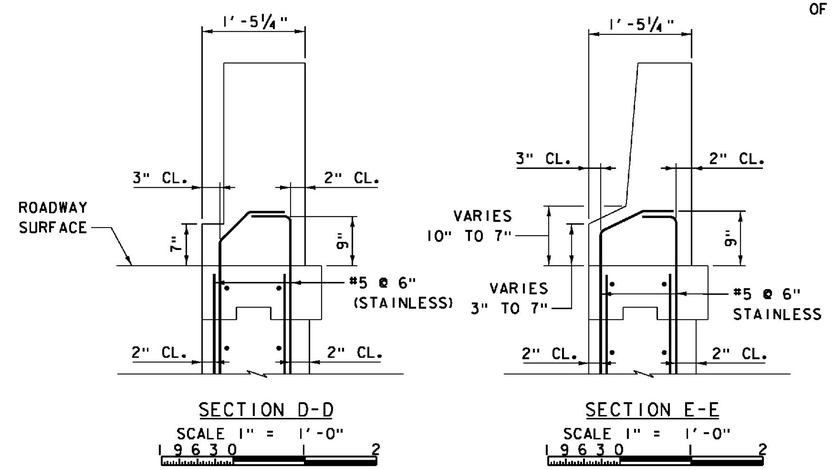

SECTION D-D

SCALE 1" = 1'-0"

SECTION E-E

SCALE 1" = 1'-0"

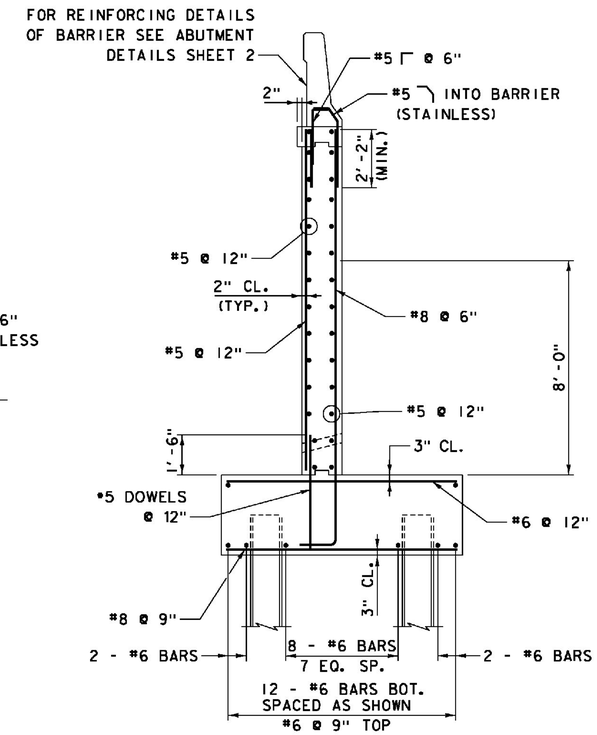

TYPICAL WINGWALL SECTION REINFORCEMENT

SCALE 3/8" = 1'-0"

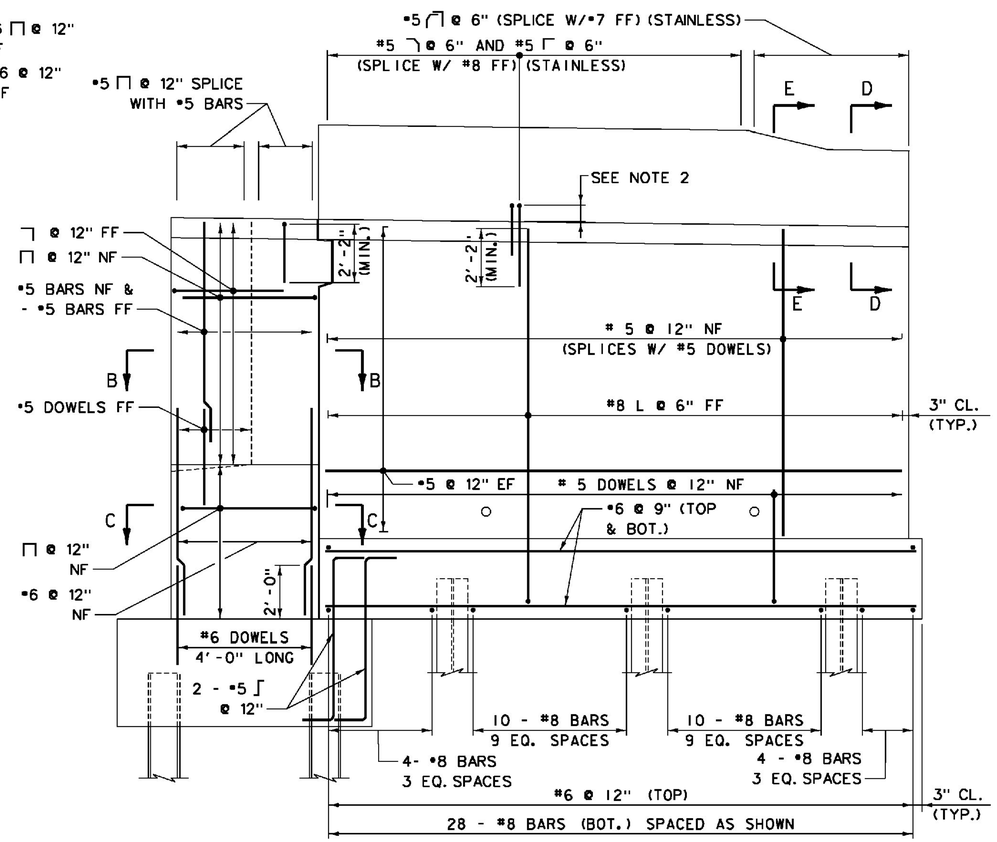

WINGWALL 2 REINFORCEMENT

SCALE 3/8" = 1'-0"

LEGEND
NF - NEAR FACE
FF - FAR FACE
EF - EACH FACE

ITEMS USED ON THIS SHEET	
ITEM NO.	DESCRIPTION
501.33	CONCRETE, HIGH PERFORMANCE CLASS A
501.34	CONCRETE, HIGH PERFORMANCE CLASS B
507.15	REINFORCING STEEL
507.17	EPOXY COATED REINFORCING STEEL
900.635	STAINLESS STEEL REINFORCING
900.640	BRIDGE RAILING, F-SHAPE CONCRETE

NOTES:

1. REINFORCEMENT ABOVE FOOTINGS TO BE EPOXY COATED; FOOTING REBAR IS UNCOATED; REINFORCEMENT IN AND INTO F-SHAPE BARRIER TO BE SOLID STAINLESS.
2. FOR F-SHAPE BARRIER AND BAR EXTENSION INTO BARRIER REINFORCING DETAILS, SEE ABUTMENT DETAILS - SHEET 2.
3. FOR SECTION B-B AND SECTION C-C PILASTER REINFORCING DETAILS, SEE ABUTMENT DETAILS - SHEET 3.
4. FOR ADDITIONAL DETAILS OF BARRIER TRANSITION AT END OF WINGWALLS, SEE SUPERSTRUCTURE PLANS.

PROJECT NAME: WINDSOR
PROJECT NUMBER: IM 091-1(64)

FILE NAME: z10o188Abut1RW.dgn
PROJECT LEADER: J. WILSON
DESIGNED BY: S. BOYINGTON
ABUT. 1 WINGWALL REINFORCEMENT

PLOT DATE: 7/30/2015
DRAWN BY: S. GUNN
CHECKED BY: S. HALLORAN
SHEET 92 OF 156