ITEMS USED ON THIS SHEET	
ITEM NO.	DESCRIPTION
501.33	CONCRETE, HIGH PERFORMANCE CLASS A
501.34	CONCRETE, HIGH PERFORMANCE CLASS B
507.15	REINFORCING STEEL
507.17	EPOXY COATED REINFORCING STEEL

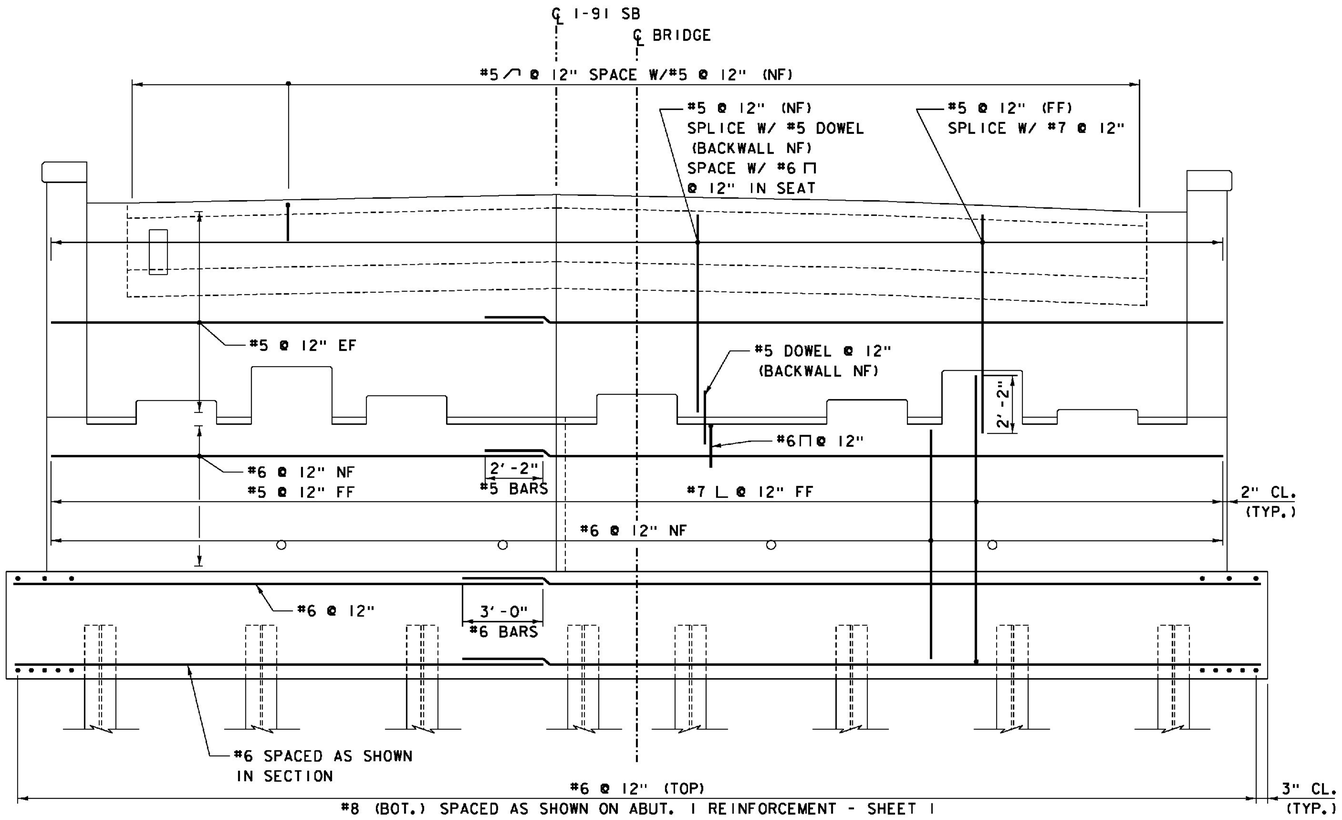

ABUTMENT 1 ELEVATION REINFORCEMENT

SCALE 3/8" = 1'-0"

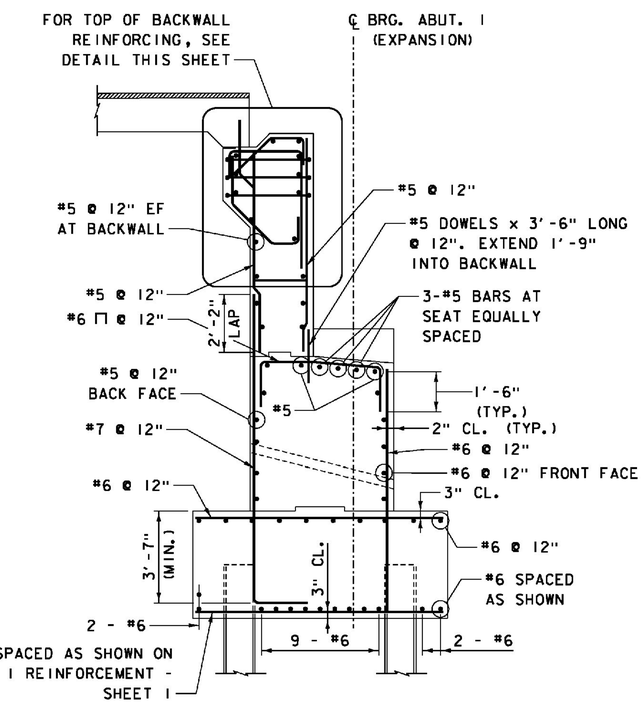

ABUTMENT 1 SECTION REINFORCEMENT

SCALE 3/8" = 1'-0"

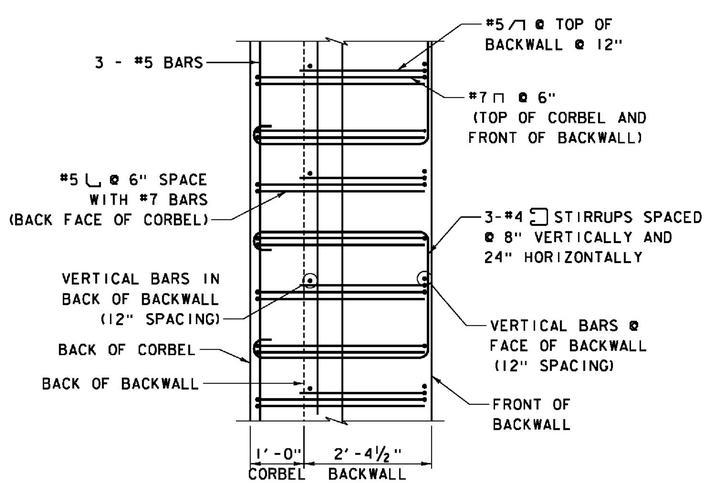

CORBEL REINFORCEMENT PLAN DETAIL

SCALE ¾" = 1'-0"

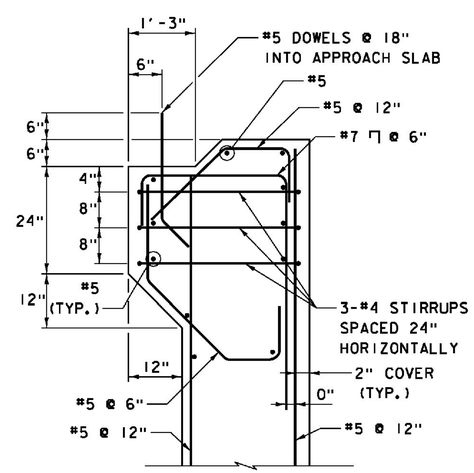

TOP OF BACKWALL REINFORCEMENT DETAIL

SCALE ¾" = 1'-0"

NOTES:

1. FOR SUBSTRUCTURE NOTES SEE ABUTMENT 1 PLAN SHEET.
2. FOR REINFORCEMENT IN ABUTMENT PEDESTALS, SEE ABUTMENT DETAILS - SHEET 1.
3. FOR KEEPER BLOCK REINFORCING SEE ABUTMENT DETAILS - SHEET 2.

LEGEND
NF = NEAR FACE
FF = FAR FACE
EF = EACH FACE

PROJECT NAME: WINDSOR	
PROJECT NUMBER: IM 091-1(64)	
FILE NAME: z10a188Abut1RES.dgn	PLOT DATE: 7/30/2015
PROJECT LEADER: J. WILSON	DRAWN BY: S. GUNN
DESIGNED BY: S. BOYINGTON	CHECKED BY: S. HALLORAN
ABUT. 1 REINFORCEMENT - SHEET 2	SHEET 91 OF 156