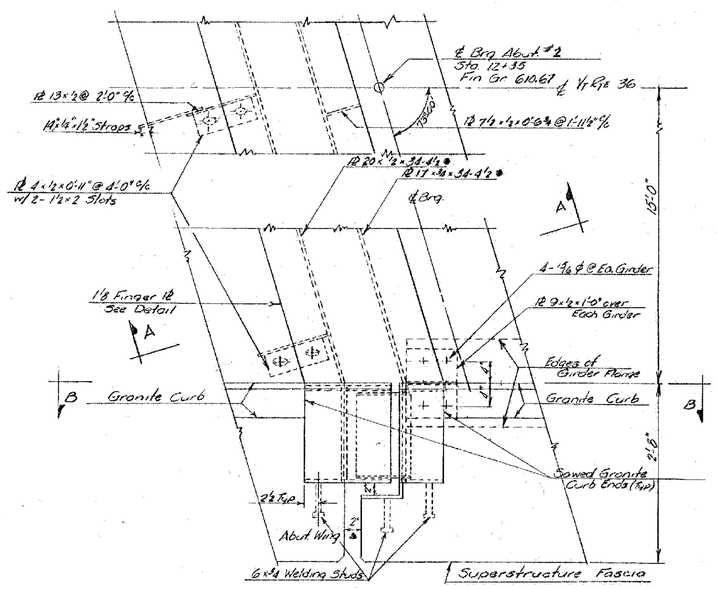

PLAN OF EXPANSION DAM
Scale: 1"=1'-0"

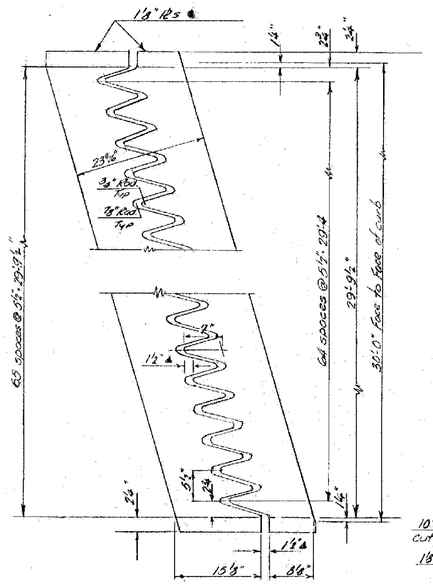

FINGER PLATE DETAIL
Scale: 1"=1'-0"

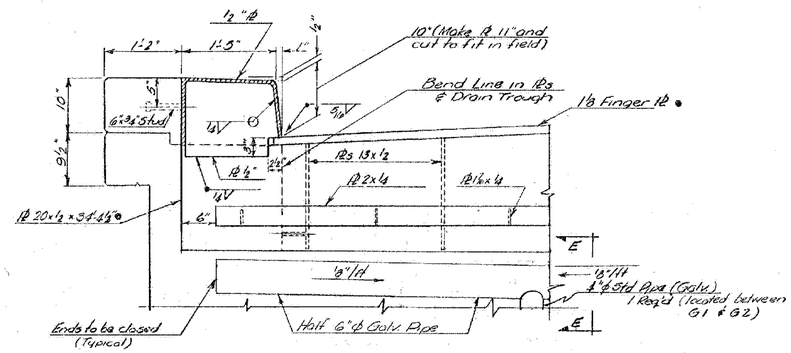

SECTION D~D
Scale: 1"=1'-0"

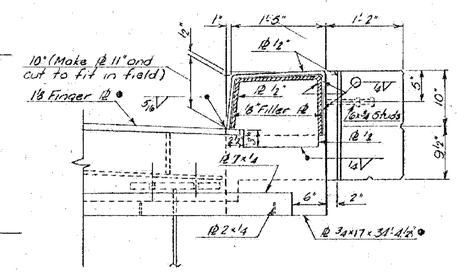

SECTION C~C
Scale: 1"=1'-0"

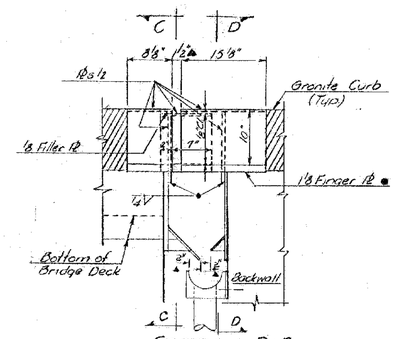

SECTION B~B
Scale: 1"=1'-0"

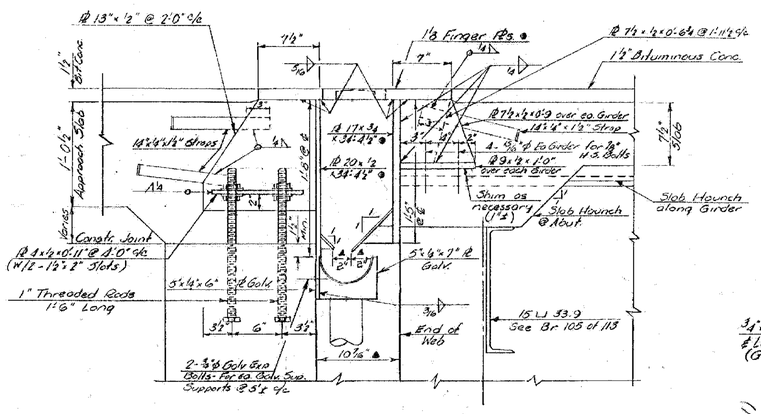

SECTION A~A
Scale: 1½"=1'-0"

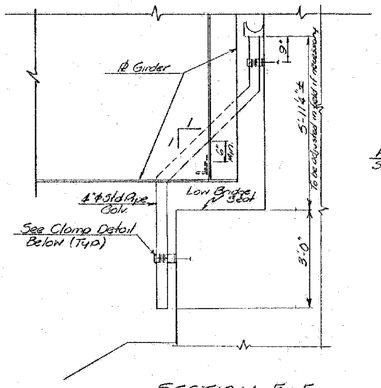

SECTION E~E
Scale: ½"=1'-0"

PLAN OF FIXED ABUTMENT @ CURB
Scale: 1"=1'-0"

• NOTES •

1. Plates marked ● shall conform to the roadway grade and parabolic crown.
2. All clear dimensions indicated ▲ are for 68°F
3. All steel for the Expansion Dam shall be ASTM A-242 unless otherwise noted, except plates completely embedded in concrete may be A-36 Steel.

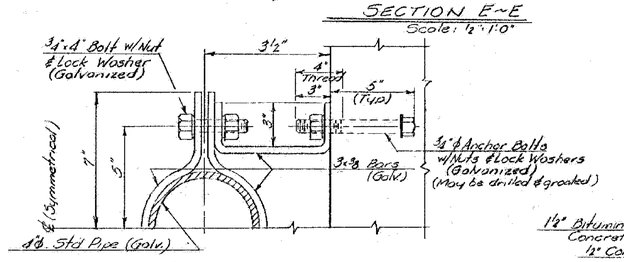

CLAMP DETAIL
N.T.S.

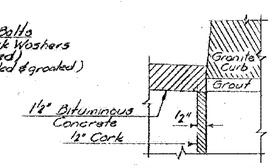

SECTION F~F
Scale: 3"=1'-0"

MILTON-HIGHGATE
IM MEMB(26)

SHEET 50 OF 70
BRIDGE 89
FOR REFERENCE ONLY

Br. 106 of 113

STATE OF VERMONT
DEPARTMENT OF HIGHWAYS

TOWN OF St ALBANS ~ SWANTON
ROUTE NO. Vt #36
Vt #36 over I-89 @ STA 3457+97
EXPANSION DAM & FIXED END CURB DETAILS
SCALE: AS NOTED
SURVEYED BY
DRAWN BY JV CHECKED BY AGC
PROJECT NO. I-89-3(36) S/1
SHEET 67 OF 298