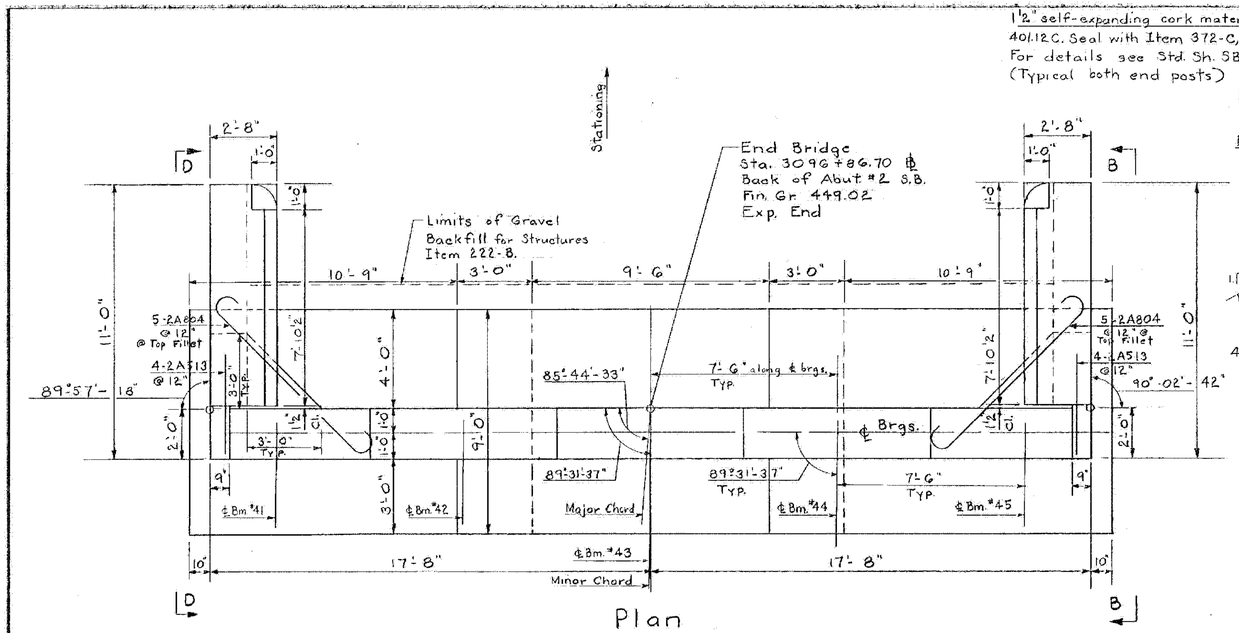

Plan

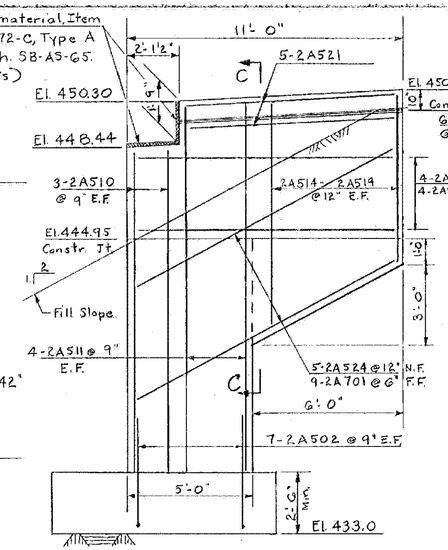

View B-B

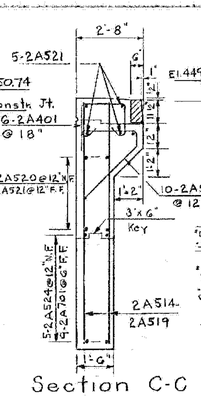

Section C-C

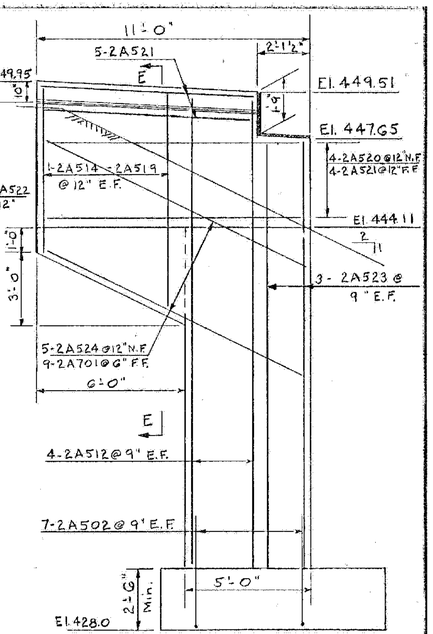

View D-D

Note:
Do not construct above this joint until structural steel is in place and final grade is determined (Typical both sides)

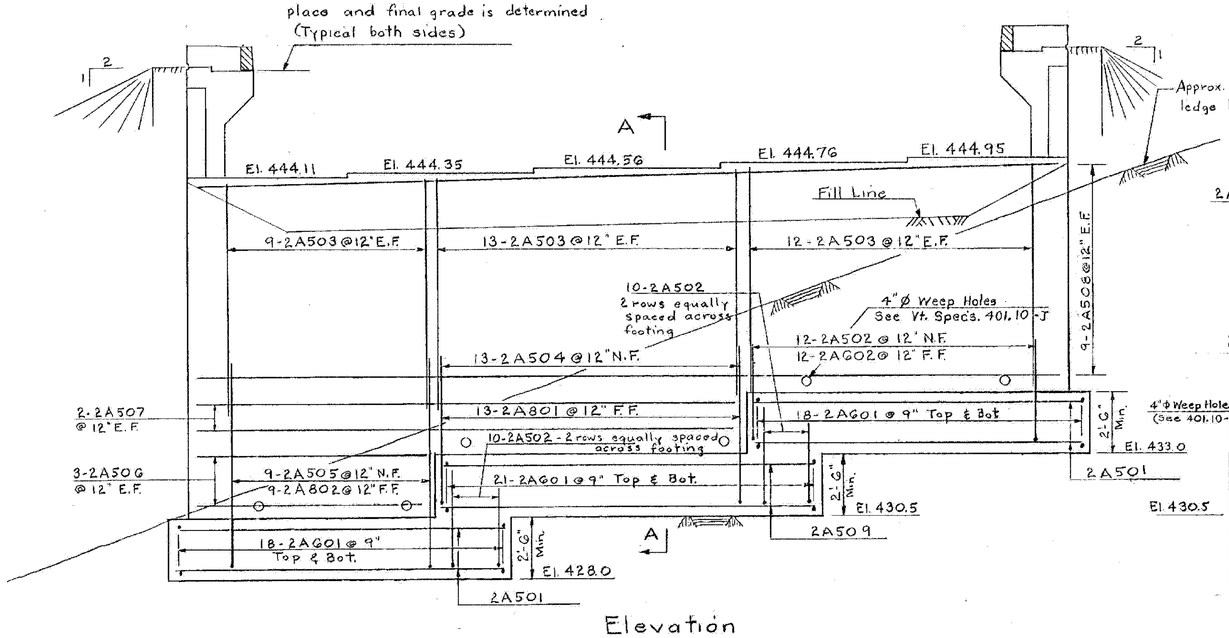

Elevation

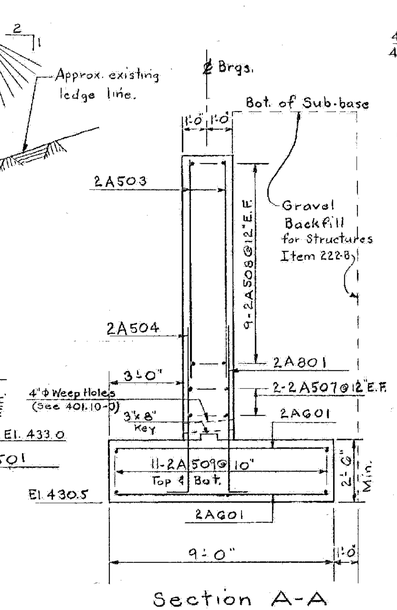

Section A-A

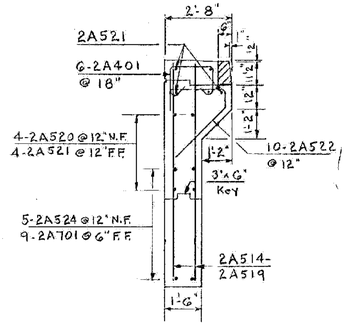

Section E-E

Notes:
1. Abutment #2 footing is to rest on sound, clean ledge.
2. For additional notes see sheet BR-120 Abutment No. 1 Details.

MILTON-HIGHGATE
IM MEMB(26)

SHEET 44 OF 70
BRIDGE 86S
FOR REFERENCE ONLY

Stage 1 Construction

CONTRACT 1

STATE OF VERMONT
DEPARTMENT OF HIGHWAYS

TOWN OF Georgia - Fairfax - Fairfield - St. Albans
ROUTE NO. I 89 LOG STA.
Abutment No. 2 Details
I 89 over C.V. Ry.
SCALE 3/8" = 1'-0"

DRAWN BY A.J.C. CHECKED BY R.P.G.
PROJECT No. I 89-3(35) Cont. #1
SHEET 39 OF 116