When bridge is on a grade exceeding 5%, plate "A" shall be beveled to fit, with a mean thickness of 1".

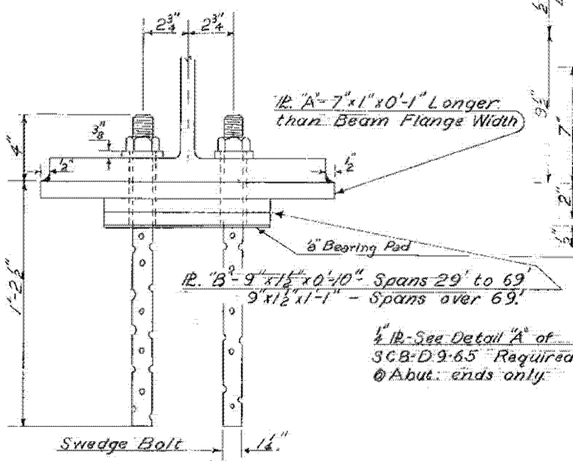

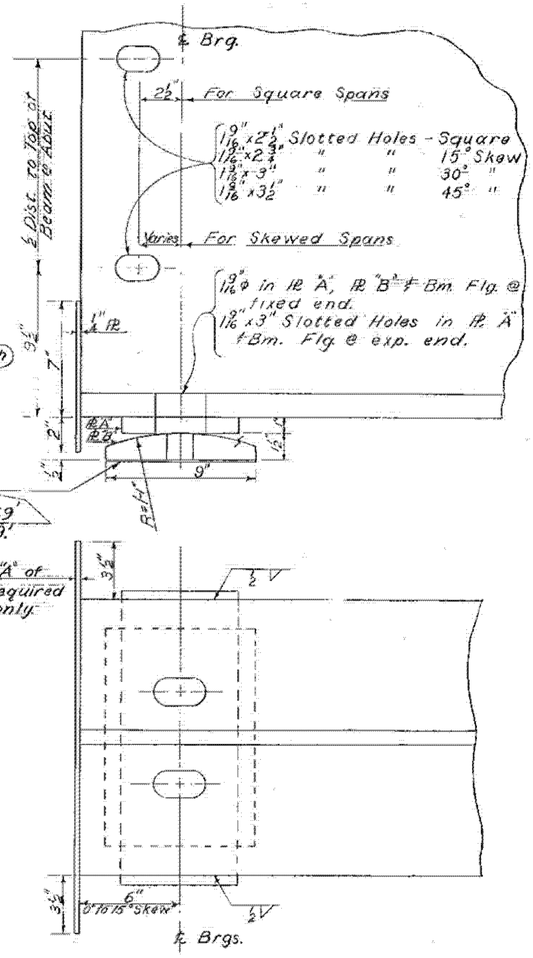

Approx. Wgt. = 90 lbs.

DETAIL FOR 0° TO 15° SKEW

Plate "C" - 9"x1½"x1" longer than the beam flange width. When the bridge is on a grade exceeding 5%, plate "C" shall be beveled to fit the grade with a mean thickness of 1½".

Plate "D" - 7"x(outer edge thickness 1½", center thickness 1")x1'-1". To be Cast Bronze - A.S.T.M.-B 22-40T. Class "B" unless otherwise specified. This plate shall have trepanned recesses filled with a lubricating compound. The lubricating area shall comprise not less than 25% of the total bearing area. The manufacturer shall supply additional lubricant in liquid form with which the Contractor shall thoroughly coat the bearing surfaces that contact the lubricated portion of the bronze plate. The coefficient of friction shall not exceed 0.10.

Plate "E" - 10"x1½"x1'-1". Finish as indicated.

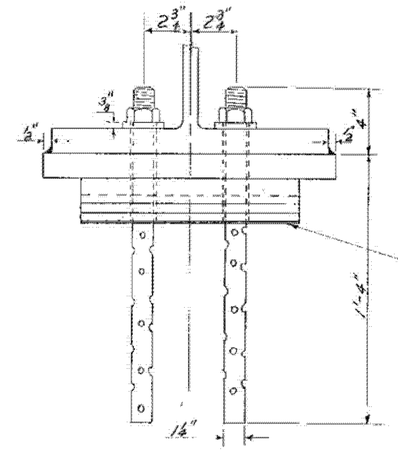

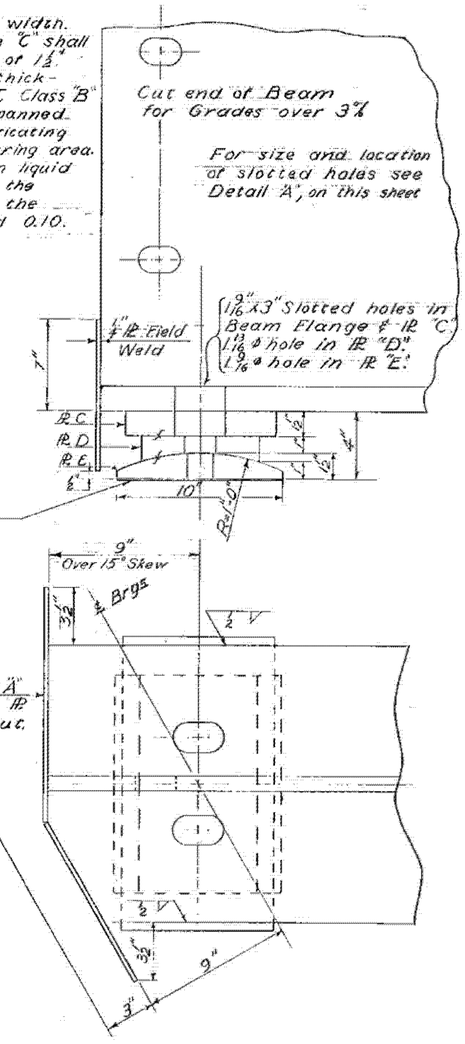

Approx. Wgt. = 150 lbs.

Attention is called to State of Vermont Department of Highways Standard Specifications for Highway and Bridge Construction, Item #404, paragraph 404.02(23) for bearing materials for Shoes and Pedestals.

FIXED END BEARING DEVICE
USE FOR EXPANSION END ON SPANS UP TO AND INCLUDING 69'

(A)

EXPANSION END BEARING DEVICE
FOR SPANS OVER 69'

(B)

REVISIONS & CORRECTIONS		DETAILS OF WF BEAM BRIDGES BEARING DEVICES	VERMONT DEPARTMENT OF HIGHWAYS STRUCTURE STANDARDS	WESTMINSTER-NORWICH IM BPNT (8) SHEET 52 OF 58 FOR REFERENCE ONLY
	Drawn By: XX-12/1/62 Revised-WT-1/25/65 Traced By: XX-12/1/62 Revised-WT-1/25/65 Checked By: EFB-WMS, RSK-12/1/62 Rev. WMS-1/29/65 Recommended For Approval: Bridge Engineer — Date 2/4/65 Recommended For Approval: Asst. Chief Engineer — Date 2/4/65 Approved By: Chief Engineer — Date 2/4/65		SCB-D8-65	256