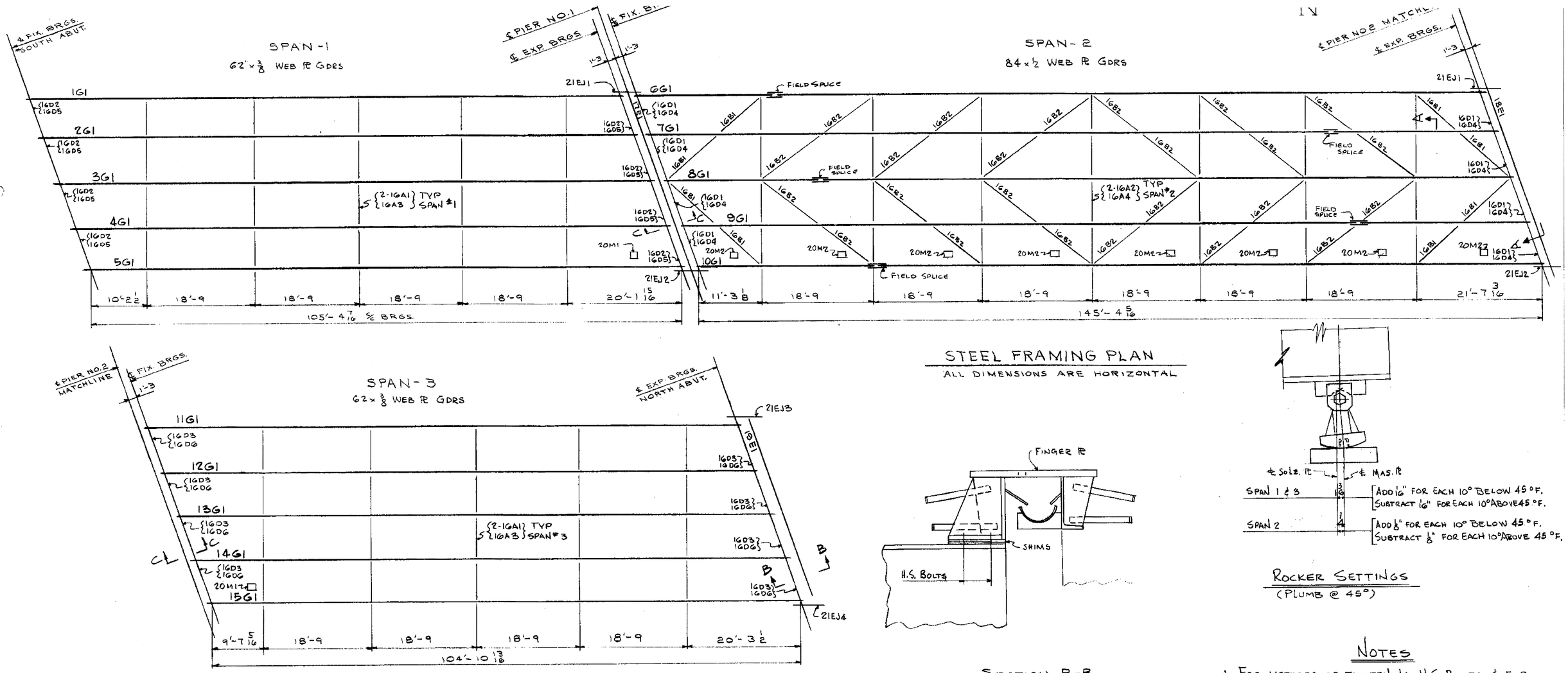


## STEEL FRAMING PLAN

ALL DIMENSIONS ARE HORIZONTAL




SECTION B-B

SECTION C-C SIM.




ROCKER SETTINGS

(PLUMB @ 45°)

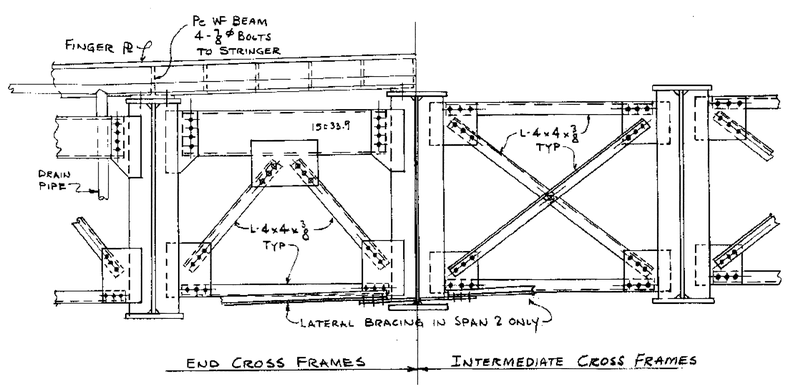


TYPICAL SECTION A-A

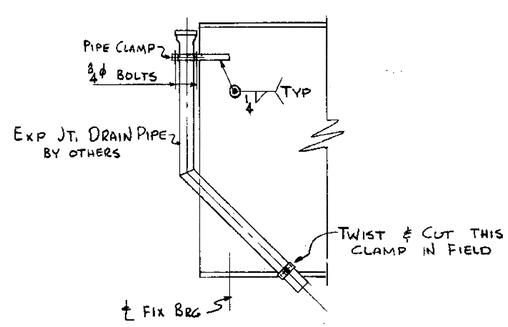


## NOTES

1. FOR METHODS OF TIGHTENING H.S. BOLTS & FOR TORQUE AND TENSION REQUIREMENTS FOR H.S. BOLTS SEE ASTM A325 SPECS.
2. SIDEWALK EXPANSIONS TO BE INSTALLED BY GENERAL CONTRACTOR.
3. FOR FIELD SPLICE DETAILS, SEE SHT. M1 & M2
4. FIELD CONNECTION BOLTS TO BE 7/8 ϕ H.S., U.N.
5. SCUPPER & DRAIN PIPE CONNECTIONS TO BE MADE BY GENERAL CONTRACTOR.
6. RADIOGRAPHIC INSPECTION REQ'D, TO BE MADE BY: ARNOLD GREENE TESTING LABORATORIES, 6 HURON DRIVE, NATICK, MASS.

ST. ALBANS - HIGHGATE
IM BPNT(4)
SHEET 22 OF 32
BRIDGE 96N&S
FOR REFERENCE ONLY

PROJECT NO. I-89-3(7) CONT. No. 1

BOLTS 7/8 ϕ H.S.
OPEN HOLES 15/16 ϕ
PAINT ONE SHOP COAT

REVISIONS

| | |
|---|---|
| 7/10/63 | ENG'R COMMENTS |
| 7/25/63 | ENGRS COMMENT |

**CITY IRON WORKS**
A DIVISION OF
TRANS-UNITED INDUSTRIES, INC.
P. O. BOX 147 WETHERSFIELD, CONN.

ROUTE NO. 89. MISSISQUOI RIVER BRIDGE. SOUTHBOUND RDWY.
SWANTON VERMONT

MADE BY Rush CHECKED BY J. DATE 12/1/62

S.O. 1529 A SHEET NO. E2

FORM 2-1 JOSEPH HERRITT & CO. NO. 1885.