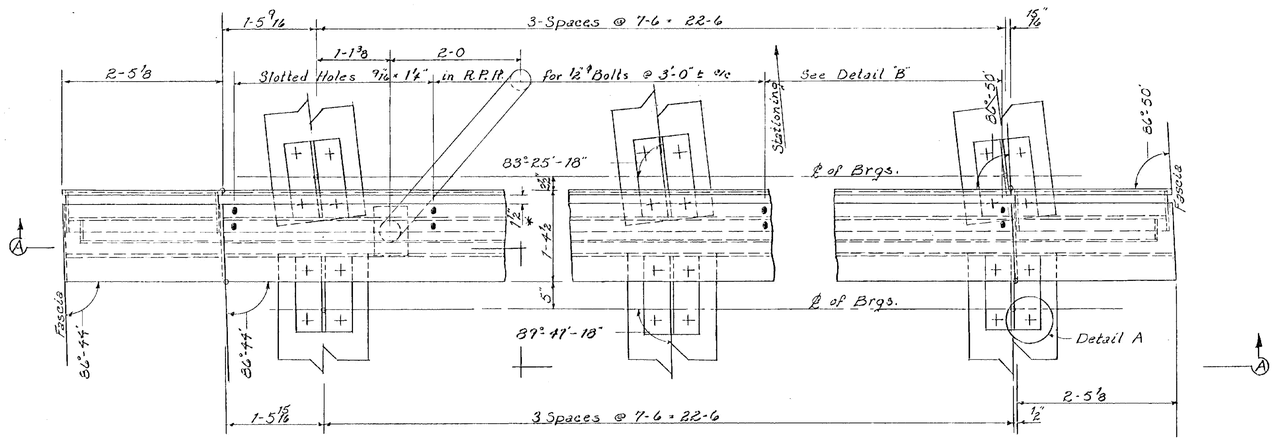

PLAN
Scale 1" = 1'

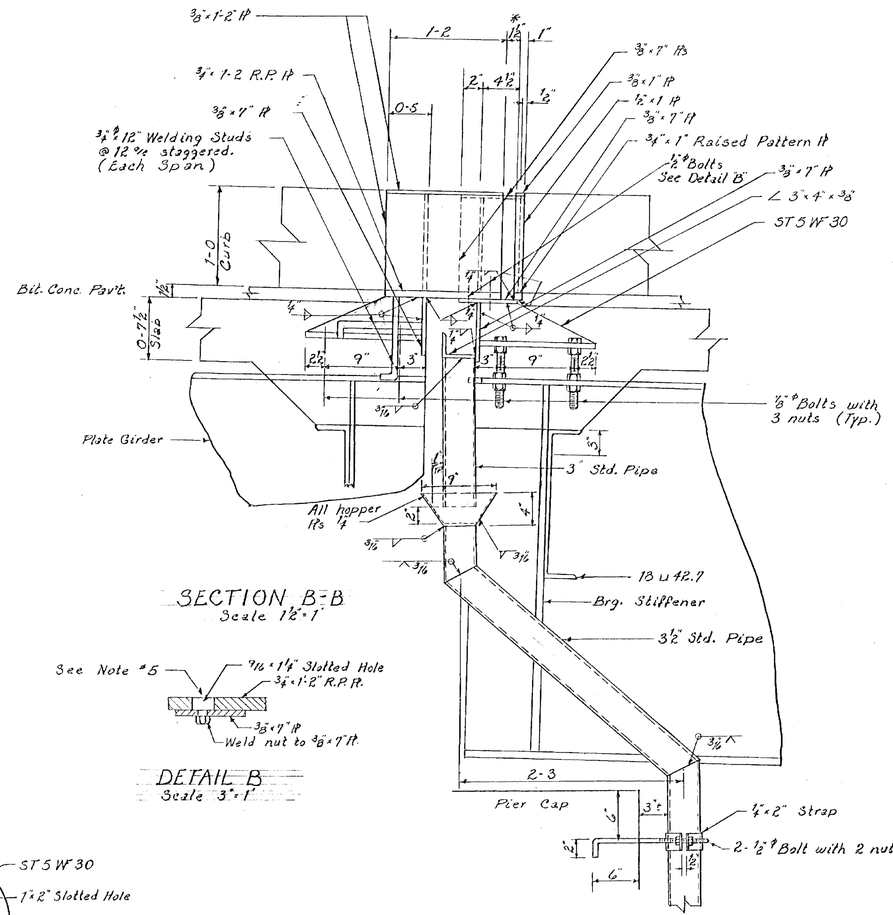

SECTION B-B
Scale 1 1/2" = 1'

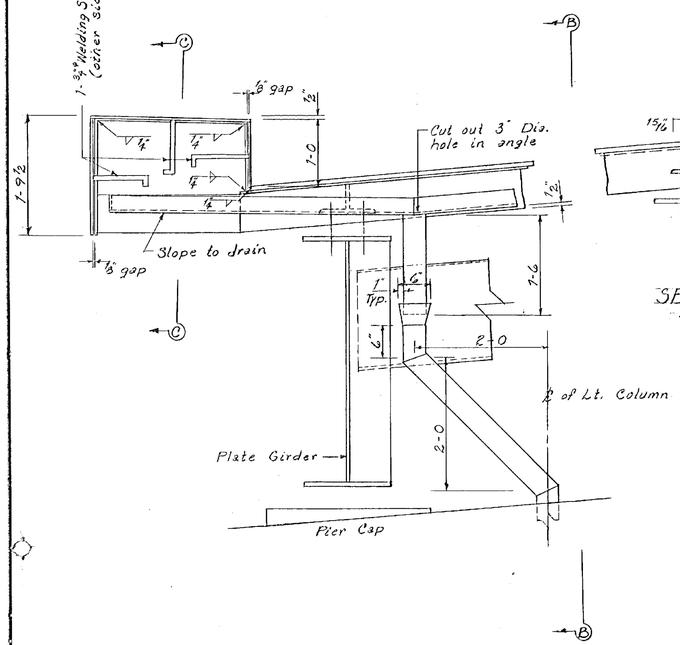

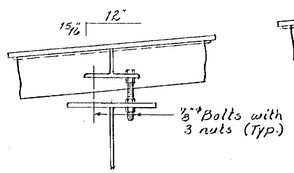

SECTION A-A
Scale 1" = 1'

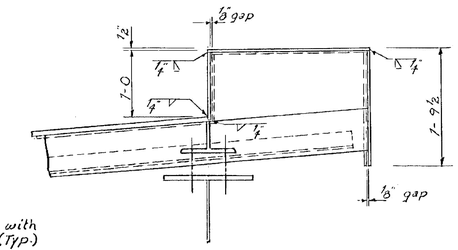

DETAIL B
Scale 3" = 1'

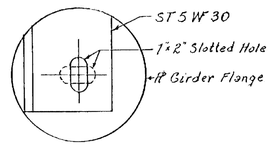

DETAIL A
Scale 3" = 1'

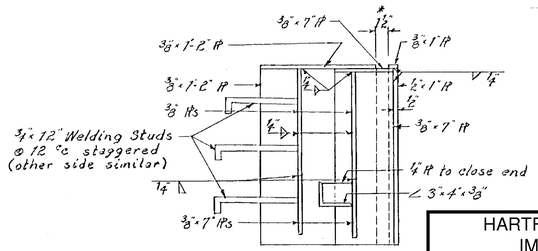

SECTION C-C
Scale 1 1/2" = 1'

NOTES

1. All parts of this expansion dam that are exposed to water after erection, shall be ASTM A242 steel.
2. * Indicates dimensions to be correct @ 68°F.
3. Adjust expansion dam to conform to grade by means of adjustment bolts.
4. For additional pipe details see Pier #1 sheet.
5. Remove 1/2" ϕ bolts in 3/4" x 1'-2" Raised Pattern Pl after the concrete has set up and fill the holes with Rubber Joint Material, Item 373.

ITEM NO.	ITEM	UNIT	NET		TOTAL	FINAL
	CHAN. EXCAV. OF EARTH	C. Y.				
	CHAN. EXCAV. OF ROCK	C. Y.				
	UNCLASS. CHAN. EXCAV.	C. Y.				
	STRUCT. EXCAV.	C. Y.				
	CONC. CLASS AA (MOD.)	C. Y.				
	CONC. CLASS B (MOD.)	C. Y.				
	REINF. STEEL	LBS.				
	ASPHALTIC-ASB. COATING	S. Y.				
	TREATED TIMBER PILING	L. F.				
	SPLICES FOR STEEL PILING	EA.				
	STEEL PILING	L. F.				
	UNTREATED TIMBER PILING	L. F.				

HARTFORD-SHARON
IM MEMB(15)

SHEET 22 OF 47
BRIDGE 41C
FOR REFERENCE ONLY

STATE OF VERMONT
DEPARTMENT OF HIGHWAYS

TOWN OF HARTFORD
ROUTE No. I 91 ~~Loc~~ STA. 22+02 ℄
EXPANSION DAM
Ramp G over Interstate 89
SCALE As shown
SURVEYED BY
DRAWN BY RPG CHECKED BY NBT
PROJECT No. I 91-1(25)(31).
SHEET 126 OF 265 Sheet 197 of 242
Pr 305 of 311