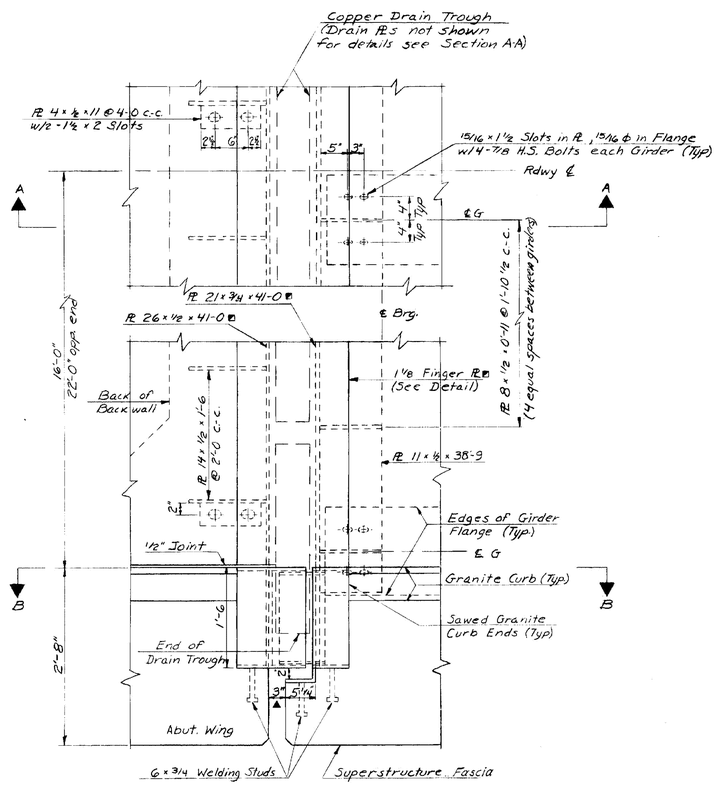

Plan of Expansion Dam @ Abut.
Scale: 1" = 1'-0"

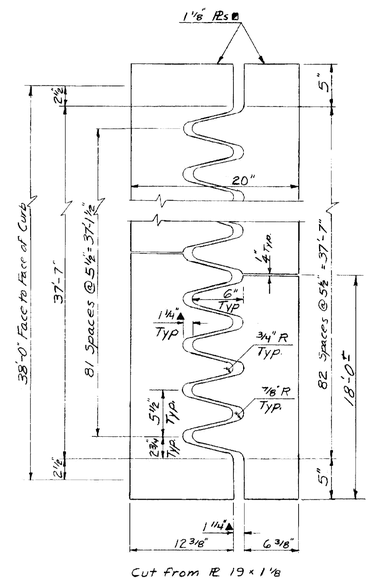

Finger Plate Detail
Scale: 1½" = 1'-0"

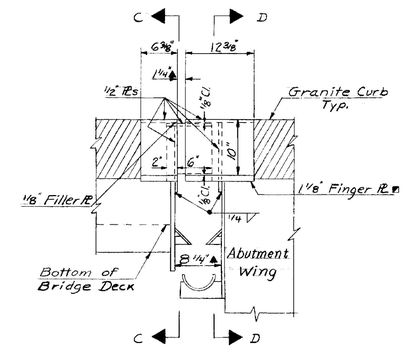

Section B-B
Scale: 1" = 1'-0"

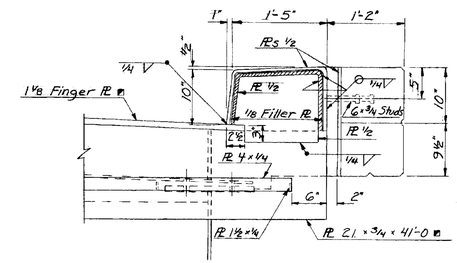

Section C-C
Scale: 1" = 1'-0"

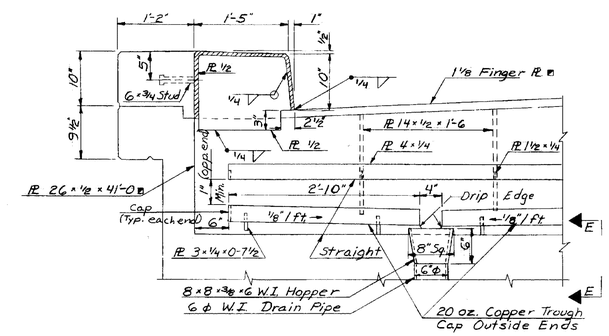

Section D-D
Scale: 1" = 1'-0"

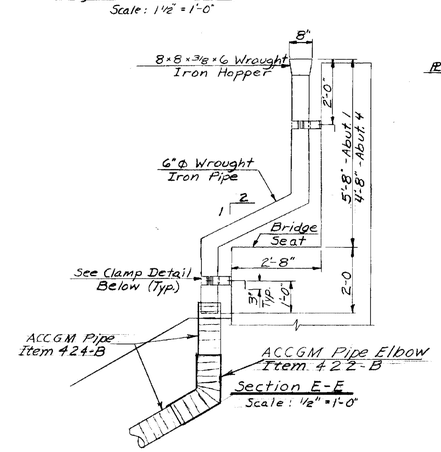

Section E-E
Scale: ½" = 1'-0"

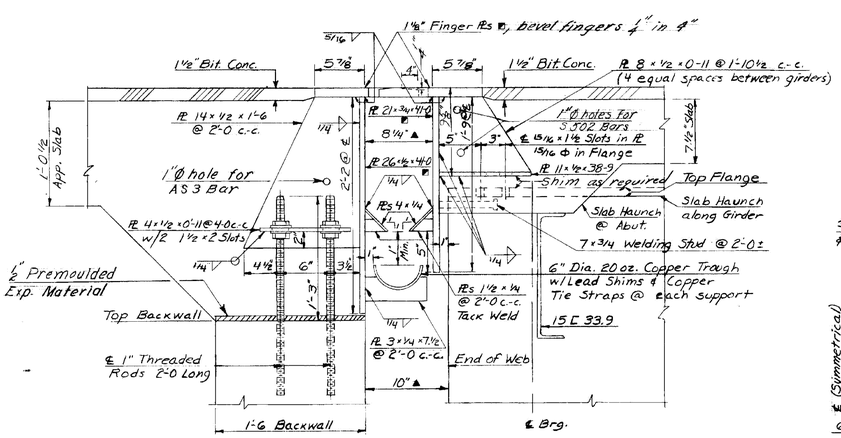

Section A-A
Scale: 1½" = 1'-0"

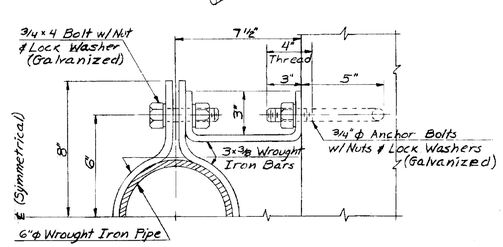

Clamp Detail
Scale: 3" = 1'-0"

Notes

1. Plates marked ▪ shall conform to the roadway grade and parabolic crown.
2. All clear dimensions marked ▲ are for 68° F.
3. All steel for the Expansion Dam shall be ASTM A-242 unless otherwise noted, except plates completely embedded in concrete may be A-36 Steel.
4. See Br. 200 for General Notes.
5. See Br. 201 for details of Fixed End Joint.
6. There shall be one drain @ each Exp. Abut. At Abut #1 the drain shall be located between Girders #1 and #2; at Abut. #4 the drain shall be located between Girders #5 & #6.

Br. 208 of 214

ITEM NO	ITEM	UNIT	NET	TOTAL	FINAL
	CHAN. EXCAV. OF EARTH	C.Y.			
	CHAN. EXCAV. OF ROCK	C.Y.			
	UNCLASS. CHAN. EXCAV.	C.Y.			
	STRUCT. EXCAV.	C.Y.			
	CONC. CLASS AA MOD.	C.Y.			
	CONC. CLASS B MOD.	C.Y.			
	REINF. STEEL	LBS.			
	ASPHALTIC-FBR. COATING	S.Y.			
	TREATED TIMBER PILING	L.F.			
	SPLICES FOR STEEL PILING	EA.			
	STEEL PILING	L.F.			
	UNTREATED TIMBER PILING	L.F.			

RICHMOND-HIGHGATE
IM MEMB(13)

SHEET 22 OF 29
BRIDGE 94S
FOR REFERENCE ONLY

STATE OF VERMONT
DEPARTMENT OF HIGHWAYS

PROJECT ST ALBANS - SWANTON
TOWN OF SWANTON
ROUTE NO. I-89 LOG STA.
I-89 OVER S.A. 3
EXPANSION DAM DETAILS
SCALE AS SHOWN
SURVEYED BY
DRAWN BY DGS CHECKED BY
PROJECT NO. I 89-3 [redacted] (42)
SHEET [redacted] 116 OF [redacted] 153