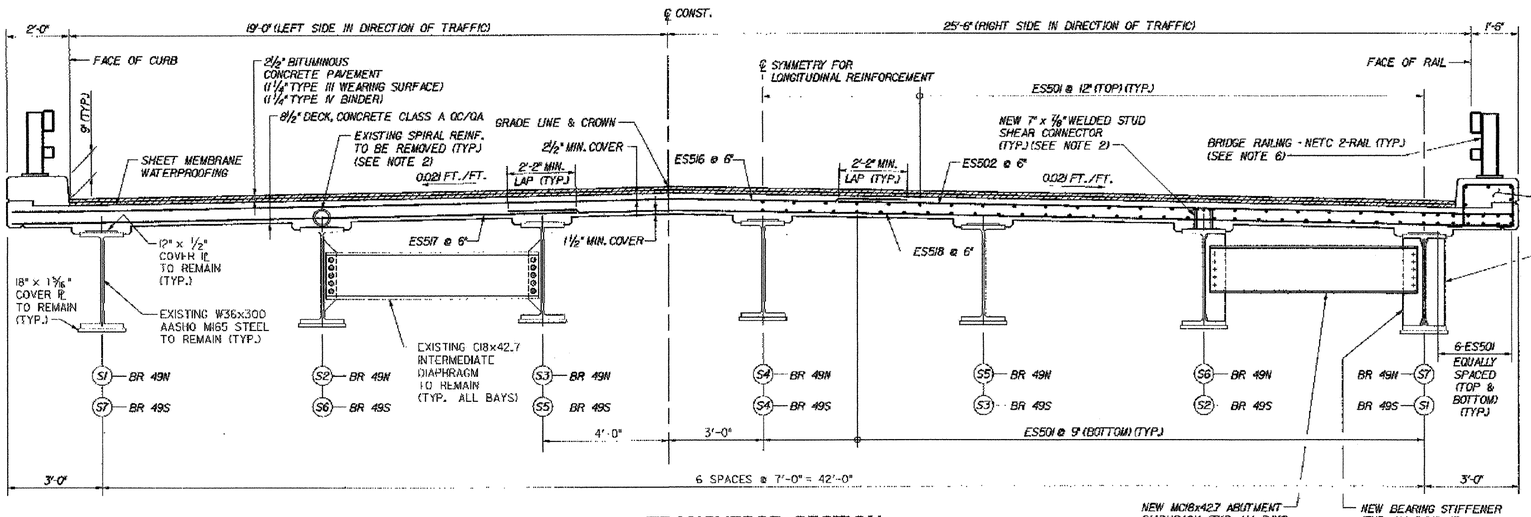

TRANSVERSE SECTION

(LOOKING UP STATION FOR BR 49N)
(LOOK DOWN STATION FOR BR 49S)

SCALE: ½" = 1'-0"

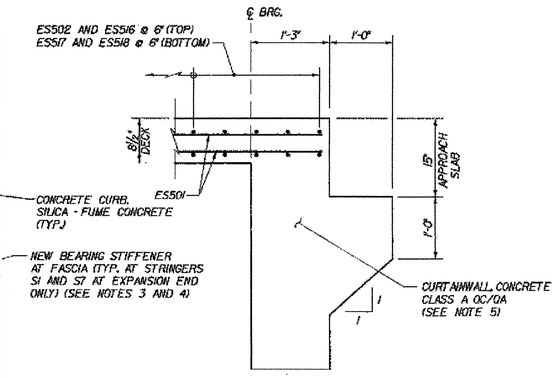

END OF DECK SLAB REINFORCEMENT DETAIL

(FIXED END)

SCALE: 1" = 1'-0"

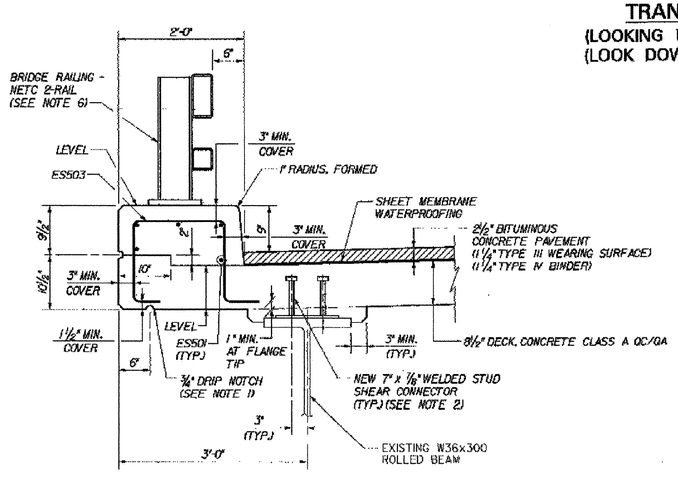

FASCIA DETAIL

SCALE: 1"=1'-0"

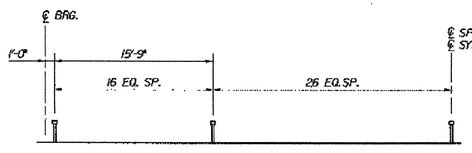

SHEAR CONNECTOR LAYOUT

N.T.S.
(SEE NOTE 2)

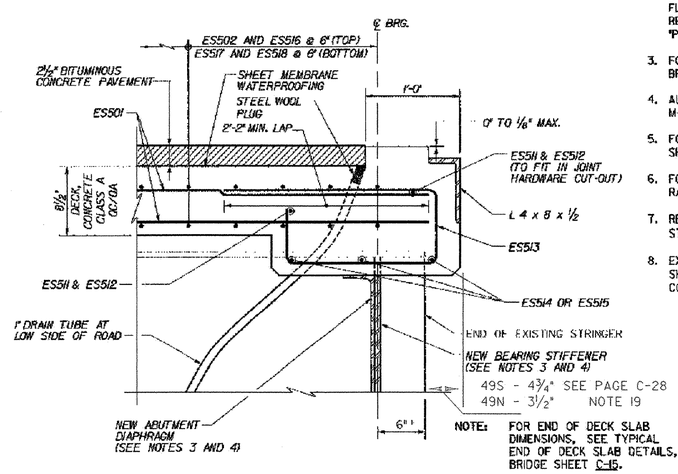

NOTE: FOR END OF DECK SLAB DIMENSIONS, SEE TYPICAL END OF DECK SLAB DETAILS, BRIDGE SHEET C-15.

END OF DECK SLAB REINFORCEMENT DETAIL

(EXP. END)

SCALE: 1½" = 1'-0"

NOTES:

1. END DRIP NOTCH 5 FEET BEFORE END OF SLAB AT "DOWNHILL" ABUTMENTS AT 45°.
2. EXISTING SPIRAL REINFORCEMENT (IF ENCOUNTERED) SHALL BE REMOVED AND REPLACED WITH WELDED STUD SHEAR CONNECTORS, ITEM 508.15, AS SHOWN. EXISTING SHEAR STUDS (IF ENCOUNTERED) SHALL BE REMOVED AND REPLACED WITH WELDED SHEAR STUDS AT THE DISCRETION OF THE RESIDENT ENGINEER. THESE ATTACHMENTS SHALL BE CUT OFF SLIGHTLY ABOVE THE FLANGE, THEN REMAINING MATERIAL SHALL BE GROUND FLUSH WITH THE FLANGE. GRINDING SHALL BE DONE IN THE LONGITUDINAL DIRECTION SO THAT NO TRANSVERSE MARKS ARE LEFT. REMOVAL OF EXISTING SPIRAL REINFORCEMENT OR STUDS SHALL BE INCLUDED IN THE BID PRICE FOR ITEM 529.20, "PARTIAL REMOVAL OF STRUCTURE."
3. FOR DETAILS OF NEW BEARING STIFFENERS AND ABUTMENT DIAPHRAGMS, SEE TYPICAL ROLLED BEAM DETAILS, BRIDGE SHEET C-16.
4. ALL NEW STRUCTURAL STEEL SHALL BE AASHTO M270, GRADE 50W STEEL. BOLTS SHALL BE ⅞" DIAMETER AASHTO M-164 TYPE 3 BOLTS IN 15/16" DIAMETER HOLES.
5. FOR CURTAINWALL DETAILS AND REINFORCEMENT LAYOUT, SEE TYPICAL CURTAINWALL REINFORCEMENT, BRIDGE SHEET C-42.
6. FOR DETAILS OF NETC BRIDGE RAIL AND APPROACH SECTION, SEE STANDARD SHEETS BRI-97 AND BR3-97, AND GUARD RAIL APPROACH SECTION, NETC 2 RAIL, BRIDGE SHEETS C-46A AND C-46B.
7. REMOVE 100% OF EXISTING PAINT COATING FROM EXISTING STRUCTURAL STEEL. PAINT ALL NEW AND EXISTING STRUCTURAL STEEL, USING ITEMS 513.30, 513.36 AND 513.41. FINAL COAT TO BE DARK BROWN (COLOR CHIP #20059).
8. EXISTING SCUPPER DOWNSPOUTS SHALL BE REMOVED PRIOR TO REMOVAL OF DECK CONCRETE. REMOVAL OF WELDS SHALL BE PERFORMED BY GRINDING, IN ACCORDANCE WITH THE PROCEDURES SHOWN IN NOTE 2, THIS SHEET. ALL COSTS FOR THIS WORK SHALL BE SUBSIDIARY TO ITEM 529.20, "PARTIAL REMOVAL OF STRUCTURE".

MIDDLESEX - WATERBURY
ST-IM 089-2(42)
SHEET 21 OF 25
BRIDGES 49 N & S
FOR REFERENCE ONLY

TVGA ENGINEERING, SURVEYING, P.C.

STATE OF VERMONT
AGENCY OF TRANSPORTATION

Town Of MIDDLESEX-BOLTON		Bridge No. 49N&S	
Highway No. I-89		Log Sta. / Surv. Sta.	
I-89 OVER TH 7			
TRANSVERSE SECTION (49N&S)			
Designed By P.W. SZUSTAK		Drawn By R.A. BOTZENHART	
Checked By J.P. HALSTEAD	Date 10/99	Bridge Design Supervisor J.P. HALSTEAD	Date 10/99
PROJECT MIDDLESEX-BOLTON		PROJECT NO. IM-089-2(26)	
TVGA CAD Drawing No. 49tsect		Date 10/99	
Bridge Sheet No. BR49-4		Sheet 78 of 307	