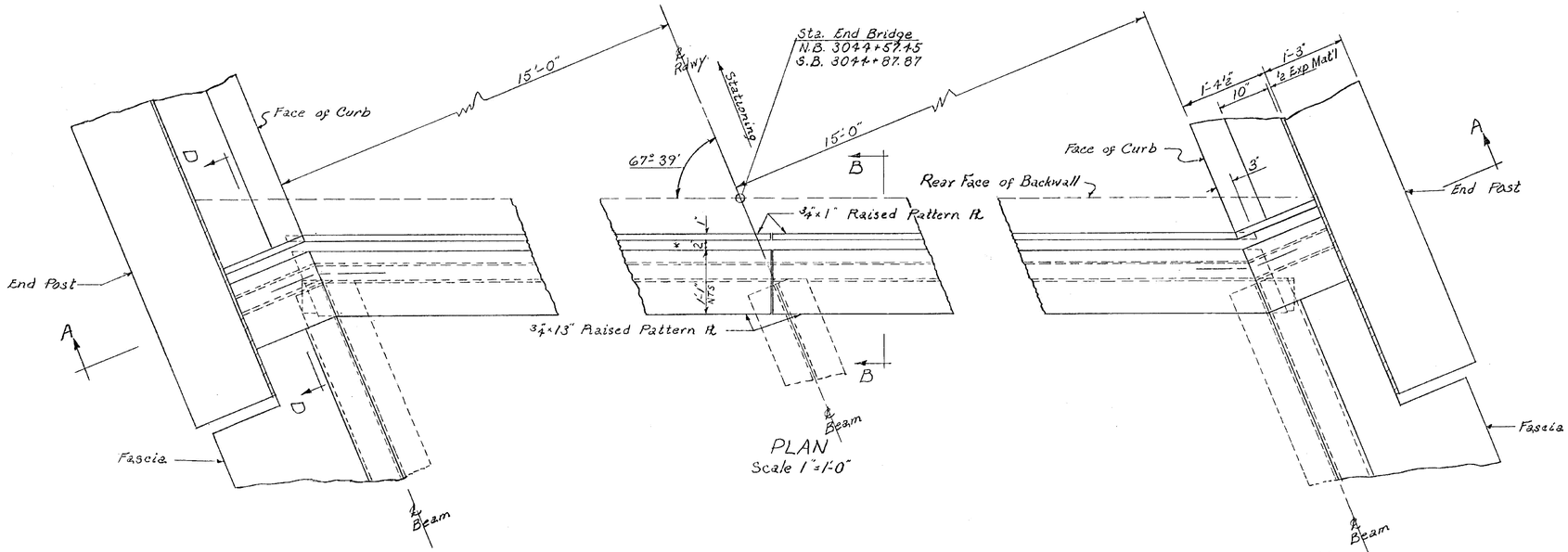

PLAN
Scale 1"=1'-0"

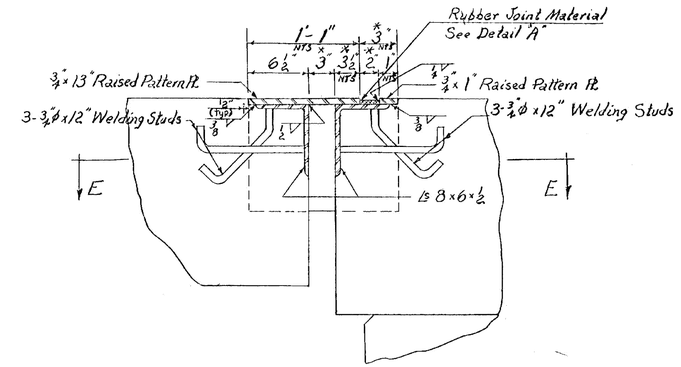

SECTION D-D
Scale 1½"=1'-0"

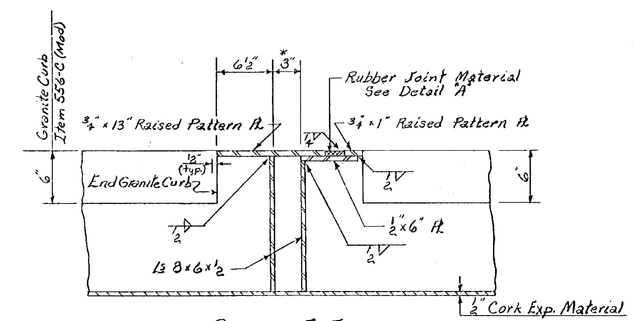

SECTION E-E
Scale 1½"=1'-0"

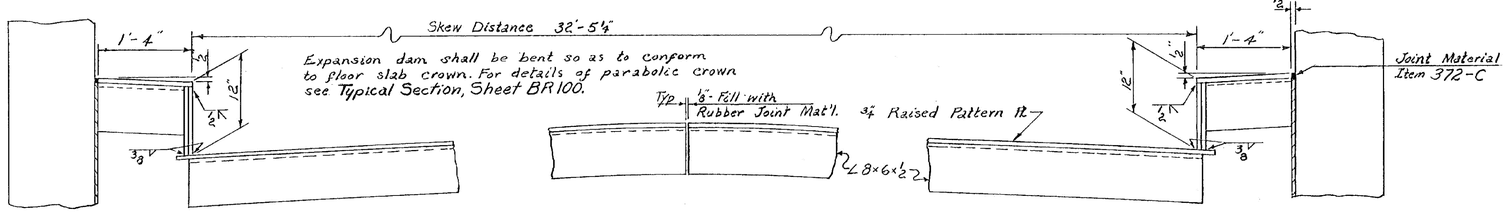

SECTION A-A
Scale 1"=1'-0"

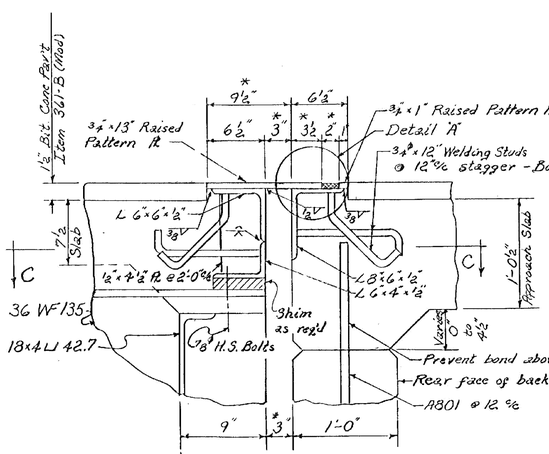

SECTION B-B
Scale 1½"=1'-0"

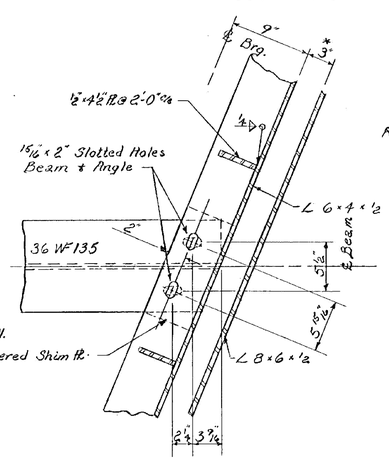

SECTION C-C
Scale 1½"=1'-0"

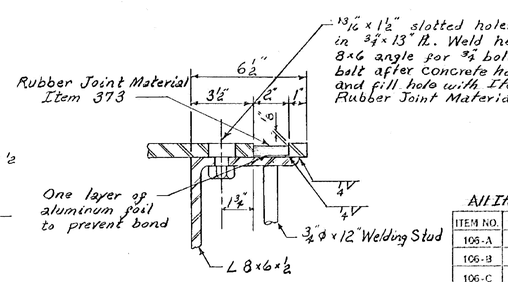

DETAIL "A"
Scale 3"=1'-0"

NOTES

1. Structural steel shall be A36 conforming to ASTM-A36-62T All erection bolts shall conform to ASTM-A307.
2. Furnish shims to adjust assembly to finish grade elevation. Allow for tapered shims arising through the use of parabolic crown.
3. Make field welds after final alignment is determined.
4. * Indicates variable dimension shown is for 68°F.
5. Bulkhead bridge slab 2'± from Expansion Dam. Make final adjustments on Dam after remainder of bridge slab has been placed.

All Items noted on this sheet are included in Superstructure Quantities.

ITEM NO.	ITEM	UNIT	NET	OVERRUN	TOTAL	FINAL
106-A	CHAN. EXCAV. OF EARTH	C.Y.				
106-B	CHAN. EXCAV. OF ROCK	C.Y.				
106-C	UNCLASS. CHAN. EXCAV.	C.Y.				
107	STRUCT. EXCAV.	C.Y.				
401-B	CONC. CLASS B (MOD.)	C.Y.				
402	REINF. STEEL	LBS.				
407	ASPHALTIC-ASB. COATING	S.Y.				
502-B	TREATED TIMBER PILING	L.F.				
503	SPLICES FOR STEEL PILING	EA.				
504	STEEL PILING	L.F.				
502-A	UNTREATED TIMBER PILING	L.F.				

WINDSOR-HARTLAND
IM MEMB(14)

SHEET 23 OF 39
BRIDGE 34S
FOR REFERENCE ONLY

STATE OF VERMONT
DEPARTMENT OF HIGHWAYS

TOWN OF WINDSOR / WEATHERSFIELD / HARTLAND
ROUTE No. I 91 LOG STA. 3043+80
Expansion Dams
I 91 over Windsor Town Road #5
SCALE As Noted
SURVEYED BY
DRAWN BY RPG CHECKED BY RND
PROJECT No. I 91-1(21) Contr #3
SHEET 46 OF 166