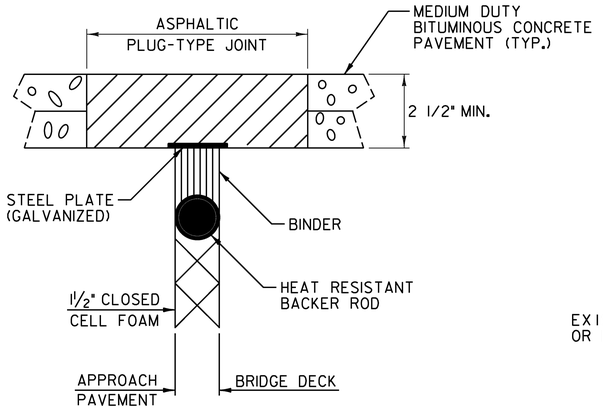

ASPHALTIC PLUG-TYPE JOINT DETAIL

NOTES:

1. THE JOINT SHALL BE LOCATED CENTRALLY OVER THE DECK EXPANSION GAP OR FIXED JOINT MARKED OUT TO THE MANUFACTURER'S RECOMMENDED WIDTH.
2. THE JOINT SHALL BE EXCAVATED AS SHOWN ON THE PLANS BY USE OF SAWS AND PNEUMATIC HAMMER OR A HAMMER AND CHISEL.
3. THE JOINT AREA SHALL BE BLAST CLEANED OF DEBRIS AND ASPHALT. THE JOINT AREA SHALL BE THOROUGHLY DRIED USING HOT COMPRESSED AIR PRIOR TO APPLYING BINDER MATERIAL.
4. SPALLED AND DEFECTIVE CONCRETE SHALL BE REPAIRED WITH AN APPROVED MATERIAL AS AGREED UPON BY THE RESIDENT ENGINEER.
5. PROPERLY SIZED HEAT RESISTANT BACKER ROD SHALL BE PLACED IN THE MOVEMENT GAP ALLOWING FOR 1 INCH +/- OF BINDER ABOVE THE ROD.
6. THE BINDER MATERIAL SHALL BE HEATED AND PLACED AS RECOMMENDED BY THE MANUFACTURER.
7. PLACE 1/4 INCH THICK BY 8 INCH WIDE SECTIONS OF STEEL PLATE OVER THE CENTER OF THE MOVEMENT GAP. SECURE PLATES FROM MOVING BY INSERTING LOCATING PINS THROUGH THE PRESTAMPED HOLES INTO BACKER ROD AND COVER WITH HOT BINDER.
   A. THE STEEL PLATES MAY BE OMITTED WHERE THE APPROACH SLAB IS COVERED WITH A STONE BASE OR BITUMINOUS PAVEMENT AND VERTICAL MOVEMENT OF THE PLATES MIGHT OCCUR.
8. THE BINDER MATERIAL AND AGGREGATE SHALL BE HEATED AND MIXED AS RECOMMENDED BY THE MANUFACTURER.
9. THE INSTALLATION OF MATERIAL, COMPACTION, AND TOPCOATING SHALL BE AS RECOMMENDED BY THE MANUFACTURER.
10. IMMEDIATELY AFTER TOPCOATING, AN ANTI-SKID MATERIAL SHALL BE CAST OVER THE JOINT TO REDUCE THE RISK OF TRACKING.
11. JOINT SHALL BE PROTECTED FROM TRAFFIC UNTIL THE MATERIAL HAS COOLED TO 125°F ±.

WEATHER LIMITATIONS

BINDER MATERIAL SHALL BE APPLIED ONLY WHEN THE FOLLOWING CONDITIONS PREVAIL:

A. THE AMBIENT AIR TEMPERATURE IS AT LEAST 50°F AND RISING.

B. THE ROAD SURFACE IS SUFFICIENTLY DRY.

C. WEATHER CONDITIONS OR OTHER CONDITIONS ARE FAVORABLE AND ARE EXPECTED TO REMAIN SO FOR THE PERFORMANCE OF SATISFACTORY WORK.

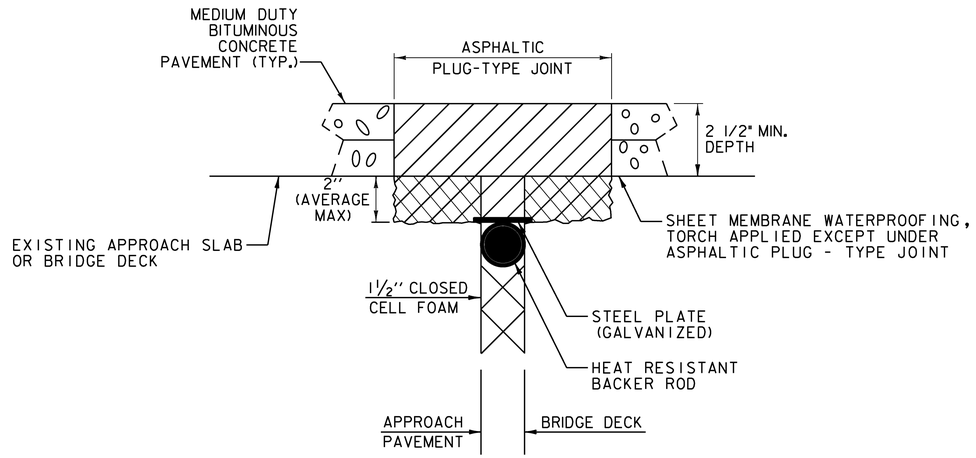

ASPHALTIC PLUG-TYPE JOINT DETAIL
REMOVAL OF UP TO
2" DETERIORATED CONCRETE

NOTES:

1. UPON ENCOUNTERING UP TO 2" AVERAGE OF DETERIORATED CONCRETE, THE CONTRACTOR SHALL REMOVE THE DETERIORATED MATERIAL AND REPLACE IT WITH THE ASPHALTIC PLUG JOINT MATERIAL AS DIRECTED BY THE RESIDENT ENGINEER.
2. REMOVAL OF THE DETERIORATED CONCRETE WILL NOT BE PAID SEPARATELY BUT WILL BE CONSIDERED INCIDENTAL TO THE UNIT BID PRICE FOR ITEM 516.10. THE ADDITIONAL PLUG JOINT MATERIAL BELOW THE DESIGN DEPTH REQUIRED TO REPLACE THE DETERIORATED CONCRETE WILL BE CONSIDERED INCIDENTAL TO THE UNIT BID PRICE FOR THE ITEM 516.10.
3. THE STEEL PLATE IN THE ASPHALTIC PLUG JOINT MAY BE OMITTED ONLY IF THE REPAIRED SURFACE IS SO IRREGULAR IT WILL CAUSE VERTICAL MOVEMENT AND IT IS DIRECTED BY THE RESIDENT ENGINEER.

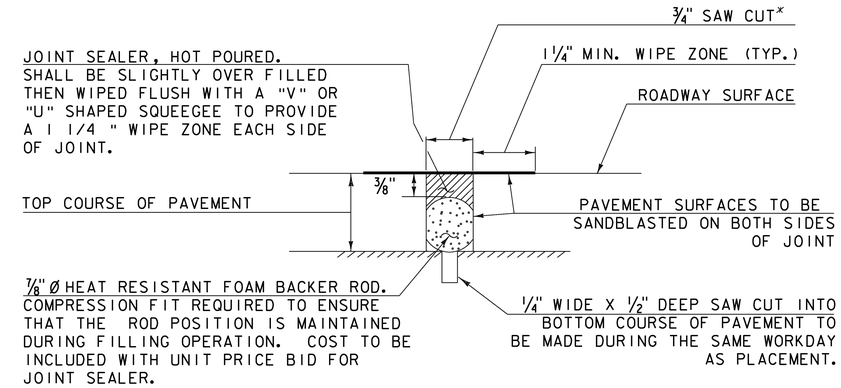

NOTE: PLACE JOINT SEALER, HOT POURED AT THE BEGINNING OF APPROACH SLABS.

SAWED PAVEMENT JOINT DETAIL

N. T. S.

*JOINT IS TO BE LOCATED ACCURATELY BY STRING LINING, OR OTHER MEANS, PRIOR TO PAVING, SO THAT THE SAW CUTS WILL BE MADE DIRECTLY OVER THE END OF CONCRETE DECK. JOINT SHALL BE CUT DRY IN A SINGLE PASS AND BE SEALED WITHIN 24 HOURS OR PRIOR TO EXPOSURE TO TRAFFIC. JOINT SHALL BE CLEANED PRIOR TO APPLYING THE JOINT SEALER.

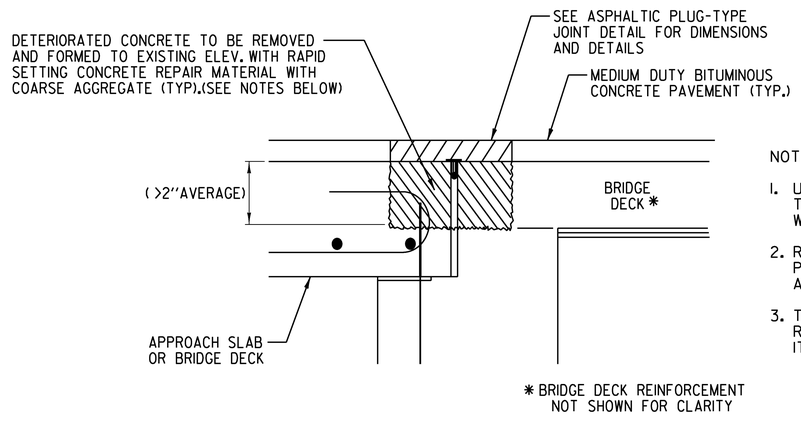

NOTES:

1. UPON ENCOUNTERING GREATER THAN 2" AVERAGE OF DETERIORATED CONCRETE, THE CONTRACTOR SHALL REMOVE THE DETERIORATED MATERIAL AND REPLACE IT WITH RAPID SETTING CONCRETE REPAIR MATERIAL WITH COARSE AGGREGATE.
2. REMOVAL OF THE DETERIORATED CONCRETE WILL BE INCLUDED IN THE UNIT BID PRICE FOR ITEM 580.20 RAPID SETTING CONCRETE REPAIR MATERIAL WITH COARSE AGGREGATE.
3. THE STEEL PLATE IN THE ASPHALTIC PLUG JOINT MAY BE OMITTED ONLY IF THE REPAIRED SURFACE IS SO IRREGULAR IT WILL CAUSE VERTICAL MOVEMENT AND IT IS DIRECTED BY THE RESIDENT ENGINEER.

ASPHALTIC PLUG-TYPE JOINT DETAIL
REMOVAL OF >2"
DETERIORATED CONCRETE

Stantec

PROJECT NAME: WINDSOR - HARTLAND	
PROJECT NUMBER: IM MEMB (14)	
FILE NAME: $FILEABBREV$	PLOT DATE: $$$$DATE$$$
PROJECT LEADER: G. BOGUE	DRAWN BY: E. ALLING
DESIGNED BY: M. CHENETTE	CHECKED BY: M. CHENETTE
PAVEMENT JOINT DETAILS	SHEET 9 OF 39