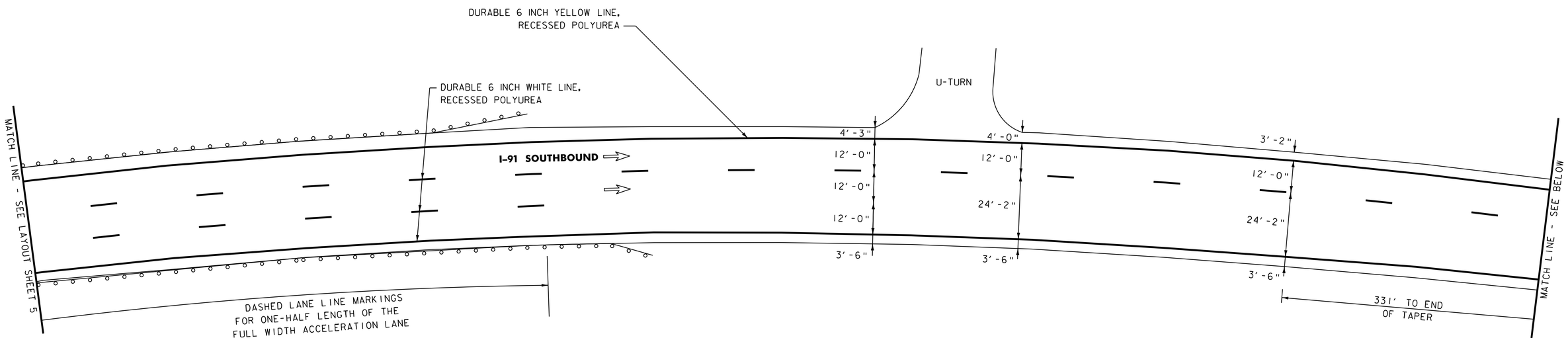

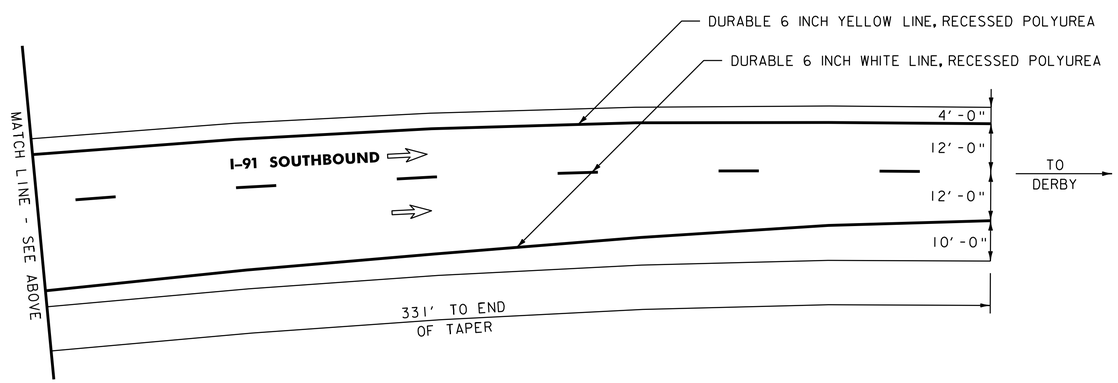

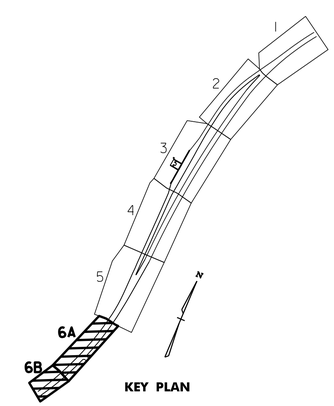

NOT TO SCALE

NOTES:
1. FOR STRIPING DETAILS AT GORES, SEE THE PAVEMENT MARKINGS DETAIL SHEET AND THE LATEST EDITION OF THE MUTCD.
2. DIRECTION OF TRAVEL ARROW ⇨

Stantec

WELCOME CENTER LAYOUT SHEET #6A & #6B

PROJECT NAME: DERBY
PROJECT NUMBER: IM 091-3(46)

FILE NAME: p06a200.dgn
PROJECT LEADER: JLL
DESIGNED BY: STANTEC
IPARM FILE: p06a200L06.i

PLOT DATE: 07-SEP-2011 10:28
DRAWN BY: STANTEC
CHECKED BY: JLL
SHEET 54 OF 63