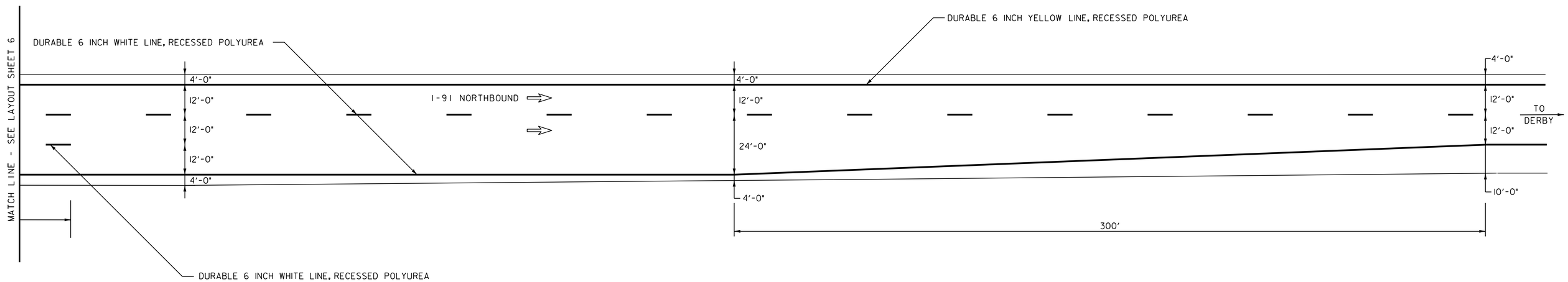

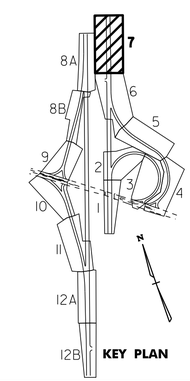

NOT TO SCALE

NOTES: 1. FOR STRIPING DETAILS AT GORES, SEE THE PAVEMENT MARKINGS DETAIL SHEET AND THE LATEST EDITION OF THE MUTCD.

2. DIRECTION OF TRAVEL ARROW ⇨

Stantec

INTERCHANGE 27 LAYOUT SHEET #7

PROJECT NAME: DERBY
PROJECT NUMBER: IM 091-3(46)

FILE NAME: p06a200.dgn
PROJECT LEADER: JLL
DESIGNED BY: STANTEC
IPARM FILE: p06a200107

PLOT DATE: 07-SEP-2011 10:24
DRAWN BY: STANTEC
CHECKED BY: JLL
SHEET 27 OF 63