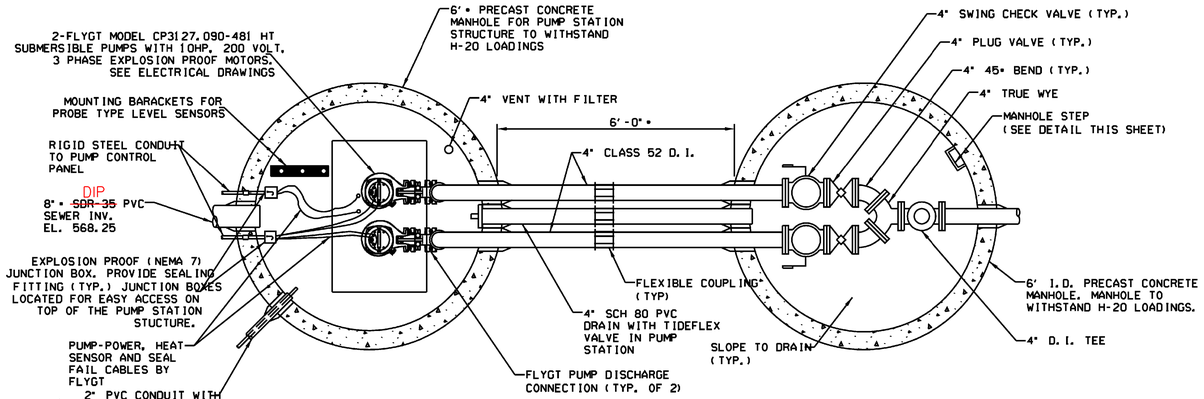

MAXFIELD PUMP STATION/VALVE MANHOLE PLAN

SCALE: 1/2"=1'-0"

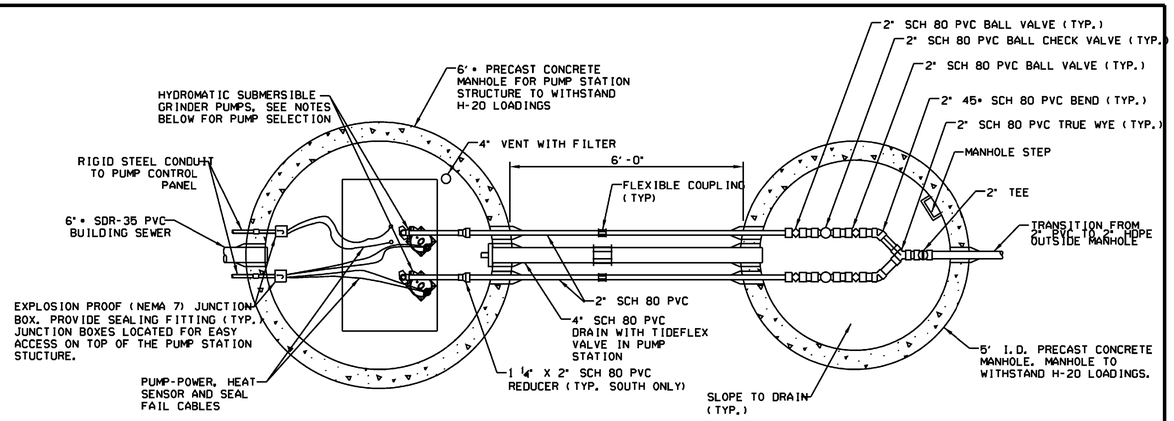

I-91 ~~NORTH~~ & SOUTH REST AREA PUMP STATION/VALVE MANHOLE PLAN

SCALE: 1/2"=1'-0"

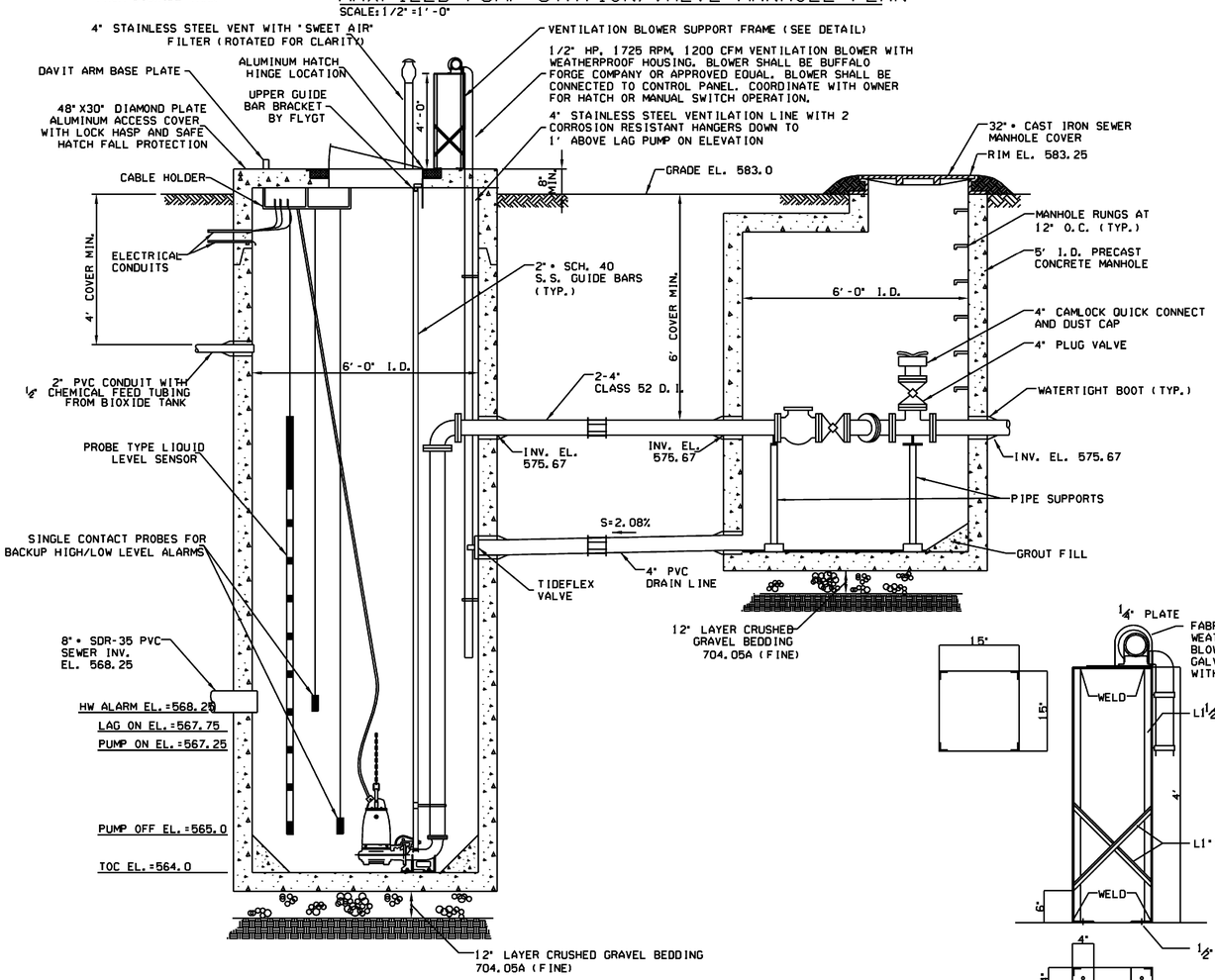

MAXFIELD SUBMERSIBLE PUMP STATION ELEVATION

SCALE: 1/2"=1'-0"

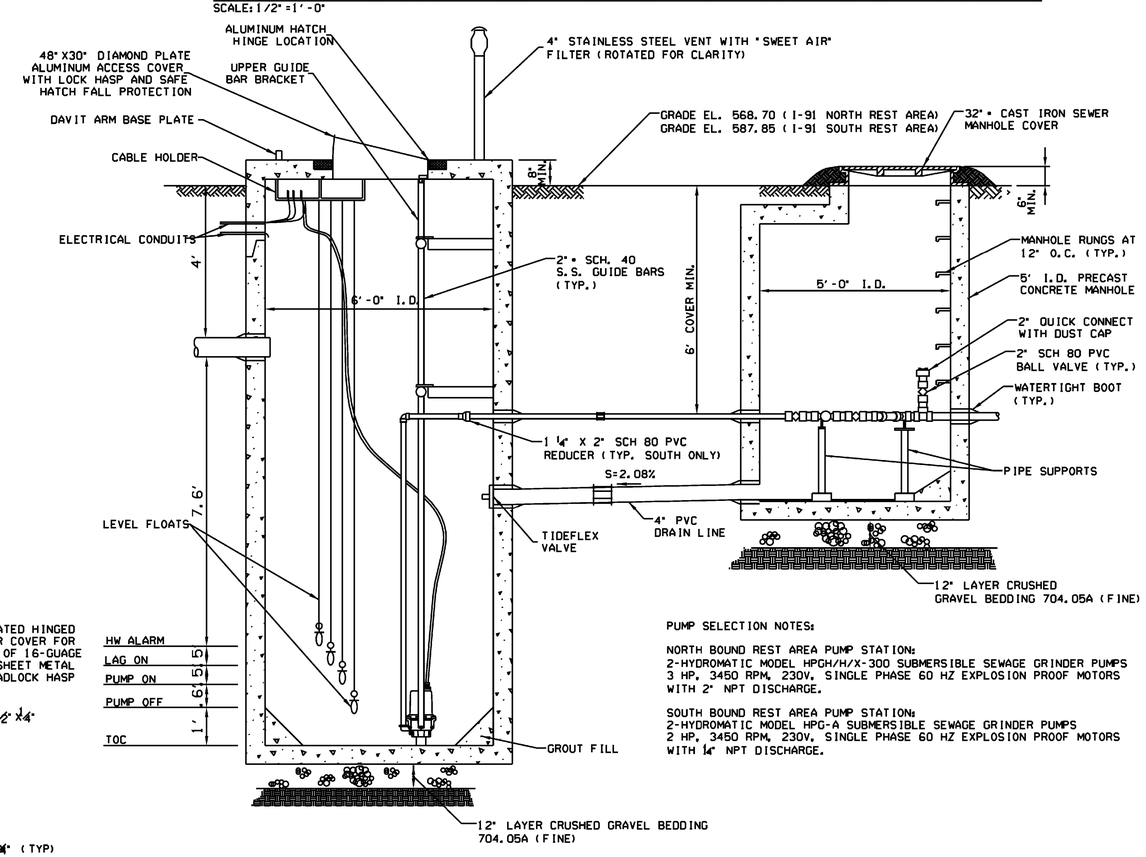

PUMP SELECTION NOTES:

NORTH BOUND REST AREA PUMP STATION:
2-HYDROMATIC MODEL HPGH/H/X-300 SUBMERSIBLE SEWAGE GRINDER PUMPS
3 HP, 3450 RPM, 230V, SINGLE PHASE 60 HZ EXPLOSION PROOF MOTORS
WITH 2" NPT DISCHARGE.

SOUTH BOUND REST AREA PUMP STATION:
2-HYDROMATIC MODEL HPG-A SUBMERSIBLE SEWAGE GRINDER PUMPS
2 HP, 3450 RPM, 230V, SINGLE PHASE 60 HZ EXPLOSION PROOF MOTORS
WITH ¼" NPT DISCHARGE.

I-91 ~~NORTH &~~ SOUTH REST AREA GRINDER PUMP STATION ELEVATION

SCALE: 1/2"=1'-0"

NOTE:

ONE DBI SALA DAVIT ARM ("8000055), A SALALIFT WINCH ("8101002) AND A SEALED SRL ("3403401) SHALL BE PROVIDED FOR CONFINED SPACE ENTRY. DBI SALA STAINLESS STEEL MOUNTING BASES ("800204D) SHALL BE PROVIDED AND INSTALLED AT EACH PUMP STATION CHAMBER FOR UTILIZING THE DAVIT ARM.

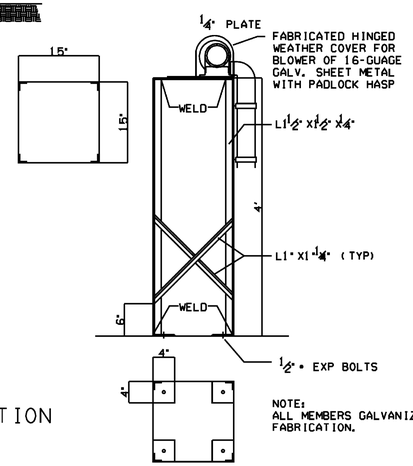

NOTE:
ALL MEMBERS GALVANIZED AFTER FABRICATION.

VENTILATION BLOWER SUPPORT FRAME

NOT TO SCALE

Stantec

PROJECT NAME: HARTFORD REST AREAS	
PROJECT NUMBER: IM BLDG(10)	
FILE NAME: ...\u04a026plt-PumpStation_Details.dgn	PLOT DATE: 5/19/2008
PROJECT LEADER: JTM	DRAWN BY: PZA
DESIGNED BY: MEHP	CHECKED BY: JTM
PUMP STATION DETAILS	SHEET 53 OF 70