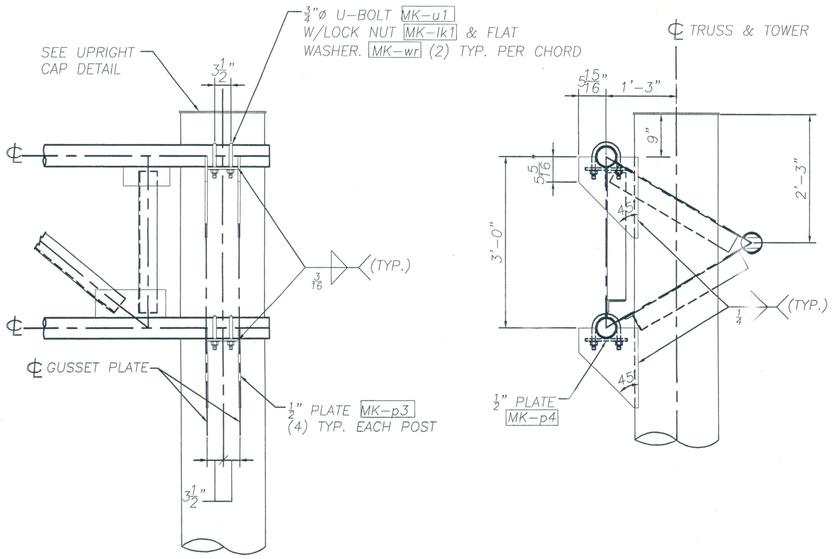

TRUSS CONNECTION DETAIL

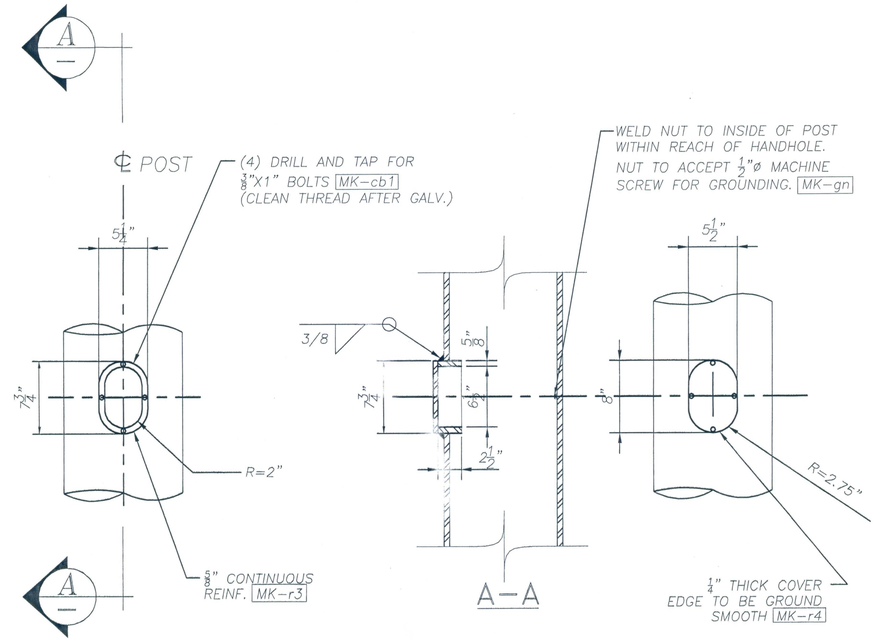

POST HANDHOLE DETAIL

PLACE ON SIDE OF POLE AWAY FROM APPROACHING TRAFFIC

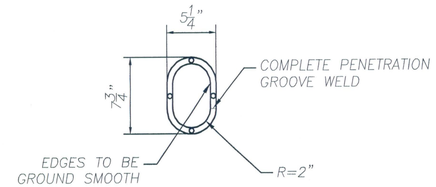

HANDHOLE REINF.

MK-r3

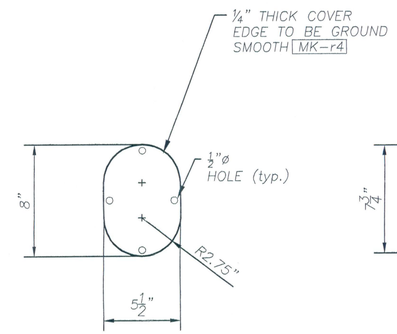

HANDHOLE COVER

MK-r4

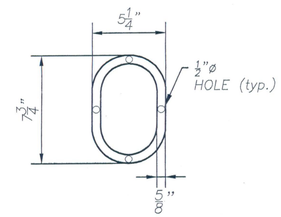

GASKET

MK-n4

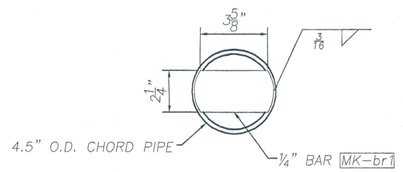

PLUG DETAIL

(EACH END OF TRUSS CHORD)

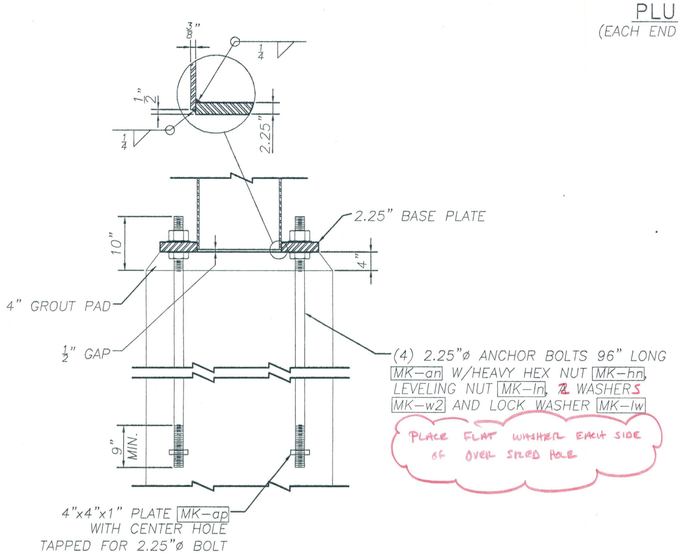

ANCHORAGE ASSEMBLY

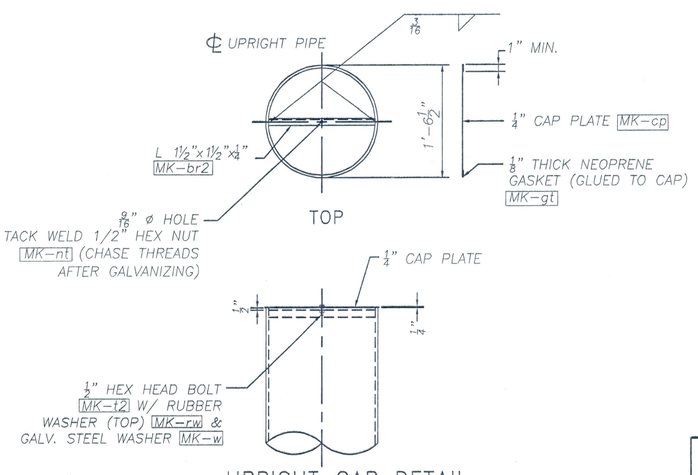

UPRIGHT CAP DETAIL

ASSEMBLE CAP TO POST PRIOR TO SHIPPING.

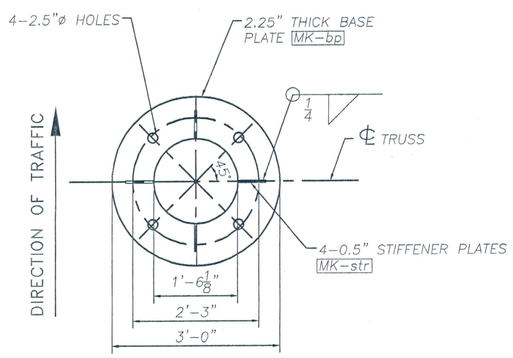

BASE PLATE DETAIL

MK-bp

REVISIONS		
No.	Remarks	Date
0	Initial submittal	

RECEIVED
CK'D BY_____ OK'D BY_____
SEP 05 2006
RESUBMIT_____ APPROVED As Noted
BY WJS DATE 9/6/06

HIGHWAY SAFETY CORP.
GLASTONBURY, CT

TRI-CHORD SIGN STRUCTURE
I-89 SB EXIT 14W RAMP "C"
CHITTENDEN COUNTY, VERMONT
CITY OF SOUTH BURLINGTON
PROJECT No. ACIM 089-3(37)

GENERAL CONTRACTOR
SUB CONTRACTOR F.R. LAFEYETTE

DRAWN	MHM
CHECKED	
DATE	8/29/06
SCALE	N.T.S.
HSC REFERENCE NO.	1557
SIZE D	REVISION 0
SHEET NO.	5 of 10