FOR INDEX OF SHEETS, SEE SHEET 2 OF 99

RECORD PLANS	
CONTRACTOR:	MORRILL CONSTRUCTION INC.– NORTH HAVERHILL, NH
RESIDENT ENGINEER:	BOB SUCKERT
CONSTRUCTION BEGAN:	JULY 24, 2006
CONSTRUCTION COMPLETE:	SEPTEMBER 27, 2007
RECORD PLANS BY:	BOB SUCKERT & CRAIG PIERCE

I HEREBY CERTIFY THAT ALL THE CONSTUCTION REQUIRED BY THIS SET OF DRAWINGS HAS BEEN ACCOMPLISHED AS INDICATED HEREIN.

BY _____ RESIDENT ENGINEER

DATE 12-13-12

NOTE: Any further information concerning final quantities, amounts or other details relative to this project may be found at Central Files in the electronic archives.

STATE OF VERMONT
AGENCY OF TRANSPORTATION

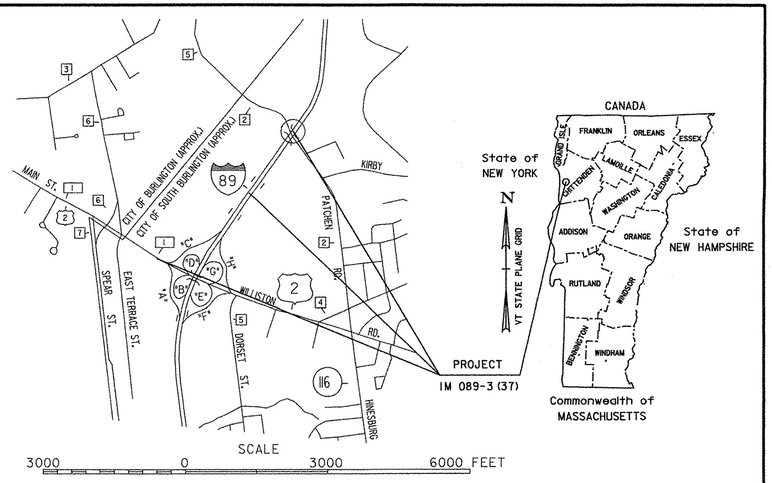

CITY OF SOUTH BURLINGTON
COUNTY OF CHITTENDEN
SAFETY IMPROVEMENTS TO INTERSTATE 89 SB EXIT 14W RAMP "C"
AT U.S. ROUTE 2 (MAJOR ARTERIAL)

BEGINNING ON US RTE 2 APPROXIMATELY 515 FEET (0.098 MILE) SOUTHEAST FROM THE BURLINGTON/SOUTH BURLINGTON TOWN LINE AND EXTENDING NORTHEASTERLY ALONG I 89 RAMP "C" APPROXIMATELY 2288 FEET (0.433 MILE).
LENGTH OF PROJECT: 2150 FT. = 0.407 MILE
THIS PROJECT CONSISTS OF RECONSTRUCTION AND WIDENING OF RAMP "C", MINOR REALIGNMENT OF RAMP "D", AND WIDENING OF US RTE 2 INCLUDING PAVEMENT, SUBBASE, CURB, SIDEWALK, PAVEMENT MARKINGS, THE INSTALLATION OF NEW TRAFFIC SIGNALS AT RAMP "C" AND US RTE 2, AND INSTALLATION OF OVERHEAD SIGNS AT THE PATCHEN ROAD OVERPASS.

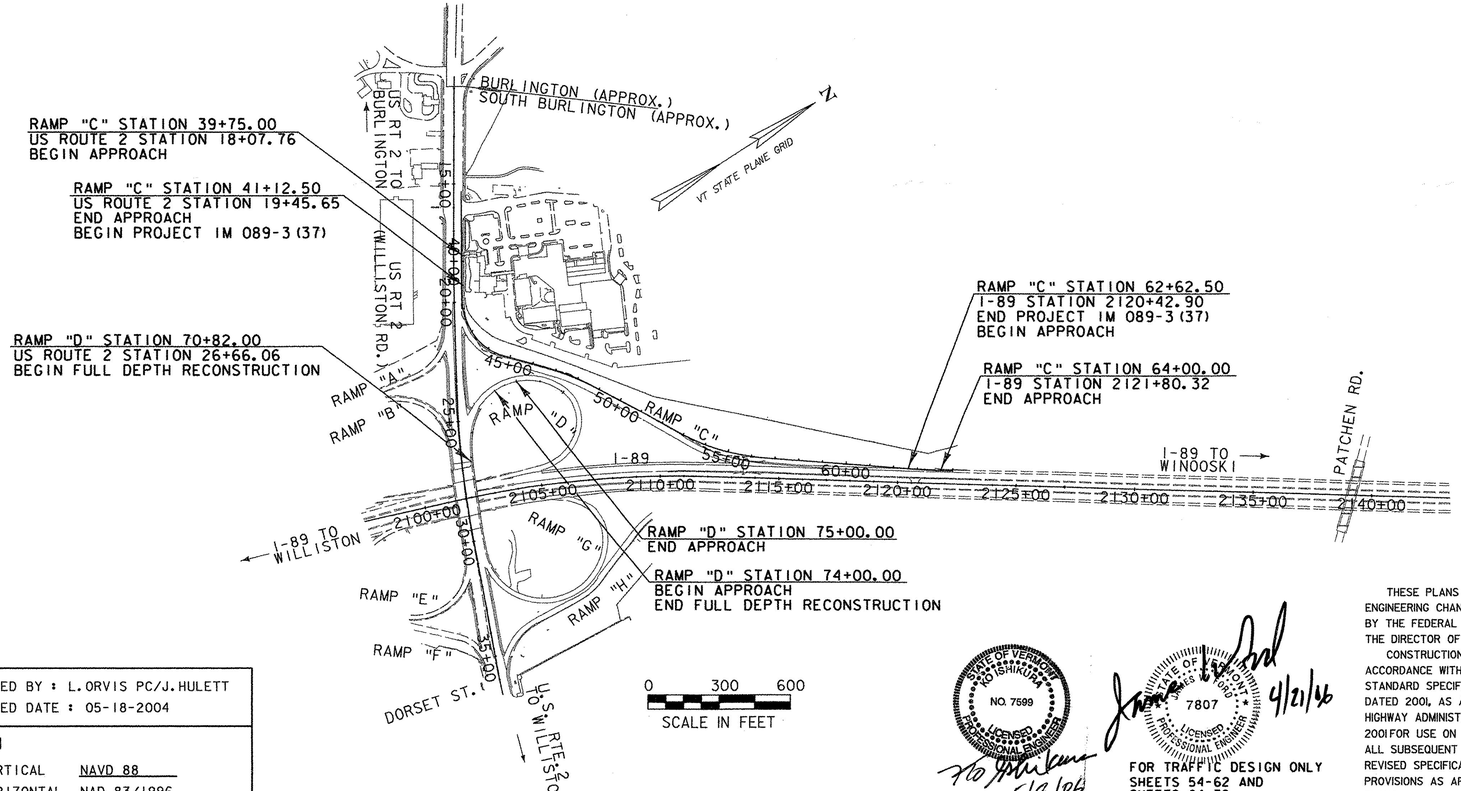

CONVENTIONAL SYMBOLS

COUNTY LINE	COUNTY LINE
TOWN LINE	TOWN LINE
LIMITS OF ACCESS	
POINT OF ACCESS	X
FENCE LINE	
STONE WALL	
TRAVELED WAY	
GUARD RAIL	
RAILROAD	
SURVEY LINE	
CULVERT	
POWER POLE	
TELEPHONE POLE	
TREES	
CONTROL OF ACCESS	
PROPERTY LINE	
R.O.W. TAKING LINE	
SLOPE RIGHTS	SR SR SR
TOP OF CUT	
TOE OF SLOPE	

SURVEYED BY : L.ORVIS PC/J.HULETT
SURVEYED DATE : 05-18-2004

DATUM
VERTICAL NAVD 88
HORIZONTAL NAD 83/1996

RAMP "C" TRAFFIC DATA
2005 ADT = 5,500
2005 DHV = 980
2025 ADT = 6,700
2025 DHV = 1,130
D = 100%
T = 2%
V = 35 MPH
2005-2025 ESAL = 5,516,000
2005-2045 ESAL = 15,886,000

ROUTE 2 TRAFFIC DATA
WEST OF I-89
2005 ADT = 42,200
2005 DHV = 4,840
2025 ADT = 48,300
2025 DHV = 5,720
D = 64%
T = 3%
V = 35 MPH
2005-2025 ESAL = 13,416,000
2005-2045 ESAL = 34,644,000

BITUMINOUS CONCRETE PAVEMENT SUPER PAVE MIXTURE DESIGN CRITERIA	
DESIGN LIFE ESAL (DESIGN LANE)	13,416,000
DESIGN NUMBER OF GYRATIONS	100
PERFORMANCE GRADED ASPHALT BINDER	PG70-28

STATE OF VERMONT TO STRUCTURAL ENGINEER NO. 7599 LICENSED PROFESSIONAL ENGINEER 5/8/06

STATE OF VERMONT JAMES W. HOLT 7807 LICENSED PROFESSIONAL ENGINEER 4/21/06

FOR TRAFFIC DESIGN ONLY
SHEETS 54-62 AND
SHEETS 64-72

THESE PLANS ARE SUBJECT TO SUCH ENGINEERING CHANGES AS MAY BE REQUIRED BY THE FEDERAL HIGHWAY ADMINISTRATION OR THE DIRECTOR OF PROJECT DEVELOPMENT.

CONSTRUCTION IS TO BE CARRIED ON IN ACCORDANCE WITH THESE PLANS AND THE STANDARD SPECIFICATIONS FOR CONSTRUCTION DATED 2001, AS APPROVED BY THE FEDERAL HIGHWAY ADMINISTRATION ON JANUARY 4, 2001 FOR USE ON THIS PROJECT, INCLUDING ALL SUBSEQUENT REVISIONS AND SUCH REVISED SPECIFICATIONS AND SPECIAL PROVISIONS AS ARE INCORPORATED IN THESE PLANS.

DEPARTMENT OF TRANSPORTATION
FEDERAL HIGHWAY ADMINISTRATOR
APPROVED Mark D Richie DATE 5-24-06

DIRECTOR OF PROJECT DEVELOPMENT
APPROVED Richard Sullivan DATE 5-10-06

PROJECT MANAGER : KEN UPMAL

PROJECT NAME : SOUTH BURLINGTON
PROJECT NUMBER : ACIM 089-3(37)

SHEET 1 OF 99 SHEETS

INDEX OF SHEETS

INDEX OF SHEETS

1.	TITLE SHEET
2.	INDEX OF SHEETS
3-4.	TYPICAL SECTIONS
5-8.	QUANTITY SHEETS
9.	ITEM DETAIL AND DRAINAGE SHEET
10.	EARTHWORK SHEET
11-12.	TIE SHEETS
13-21.	ROADWAY LAYOUT SHEETS
22-23.	STORMWATER TREATMENT AND DRAINAGE DETAIL SHEETS
24-28.	RAMP "C" PROFILE SHEETS
29.	RAMP "D" PROFILE SHEET
30-31.	EROSION CONTROL NARRATIVE
32-35.	EROSION PREVENTION AND SEDIMENTATION CONTROL DETAIL SHEETS
36-44.	EXISTING CONDITIONS PLAN SHEETS
45-53.	EROSION CONTROL AND GRADING LAYOUT SHEETS
54-62.	PAVEMENT MARKING AND SIGNS LAYOUT SHEETS
63.	PATCHEN ROAD BRIDGE SIGN SUPPORT PLAN AND DETAILS
64-66.	TRAFFIC SIGNS SUMMARY SHEETS
67-68.	TRAFFIC SIGNAL PLANS
69-72.	TRAFFIC SIGNAL DETAILS
73-81.	TRAFFIC MANAGEMENT PLANS
82-94.	RAMP "C" CROSS SECTIONS
95-96.	US ROUTE 2 CROSS SECTIONS
97-99.	RAMP "D" CROSS SECTIONS

STANDARDS LISTS

B-5	EMBANKMENT ON EARTH SLOPE EMBANKMENT ON ROCK SLOPE MUCK EXCAVATION TYPICAL SLOPE ROUNDING	06/01/1994
C-1	GRANITE SLOPE EDGING VERTICAL GRANITE CURB PRECAST REINFORCED CONCRETE CURB CAST IN PLACE CONCRETE CURB TREATED TIMBER CURB	01/03/2000
C-3A	SIDEWALK RAMPS	09/01/2004
C-3B	SIDEWALK RAMPS AND MEDIAN ISLANDS	09/01/2004
D-2	CEMENT RUBBLE MASONRY HEADWALLS & RETAINING WALL RIPRAP LIGHT TYPE SLOPE HEADWALL REINFORCED CONCRETE HEADWALL UNDERDRAIN & CARRIER PIPE CONSTRUCTION DETAILS	06/01/1994
D-3	TREATED GUTTERS	06/01/1994
D-4	TYPICAL WATERFALL FOR CULVERTS UP TO AND INCLUDING 48" DIAMETER EXTENSION SERVICE BOX AND CURB STOP CORRUGATED PIPE ELBOW GRANULAR BORROW AT CULVERT LOCATIONS UNDERDRAIN FLUSHING BASIN CORRUGATED STEEL PIPE END SECTION CORRUGATED STEEL PIPE ARCH END SECTION	06/01/1994
D-8	REINFORCED CONCRETE DROP INLET WITH PRECAST COVER REINFORCED CONCRETE DROP INLET WITH GRATE (BOTTOM SECTION)	01/03/2000
D-9	REINFORCED CONCRETE DROP INLET WITH VERTICAL CURB REINFORCED CONCRETE DROP INLET THROAT ADAPTER	06/01/1994
D-10	TOP FOR A DROP INLET WITH BITUMINOUS CONCRETE CURB TOP FOR A DROP INLET GRANITE SLOPE EDGING	06/01/1994
D-11	STEEL GRATE CAST IRON GRATE TYPE A CAST IRON COVER	06/01/1994
D-15	PRECAST REINFORCED CONCRETE CATCH BASIN W/ CAST IRON GRATE PRECAST REINFORCED CONCRETE MANHOLE W/ CAST IRON GRATE CAST IRON GRATE WITH FRAME,TYPE D CAST IRON GRATE WITH FRAME,TYPE E	06/01/1994
D-16	PRECAST REINFORCED CONCRETE CURB DROP INLET WITH CAST IRON GRATE CAST IRON GRATE,TYPE B CAST IRON GRATE,TYPE C UNDERDRAIN RISER REINFORCED CONCRETE PIPE END SECTION ENERGY DISSIPATOR FOR CULVERT	06/01/1994
D-20	HIGHWAY CROSSING FOR UNDERGROUND UTILITIES	03/03/2003

E-100	CONSTRUCTION APPROACH SIGNS	01/02/2004
E-100A	SIDE ROAD CONSTRUCTION - APPROACH SIGNS	01/02/2004
E-101	CONSTRUCTION SIGN DETAILS	05/30/2003
E-102	CONSTRUCTION SIGN DETAILS	06/30/2003
E-102A	CONSTRUCTION SIGN DETAILS	05/01/2004
E-103	MAINLINE TRAFFIC CONTROL DIVIDED HIGHWAY ONE LANE CLOSED	03/01/2004
E-106	TRAFFIC CONTROL - MISCELLANEOUS DETAILS	03/01/2004
E-107A	BREAKAWAY BARRICADE DETAILS	08/08/1995
E-108	CONSTRUCTION ZONE LONGITUDINAL DROP OFFS	08/18/1995
E-110	MAJOR MAINTENANCE OPERATION LANE CLOSURE	08/08/1995
E-111	MINOR MAINTENANCE OPERATION	03/11/1997
E-112	TRAFFIC CONTROL FOR TYPICAL MOVING MAINTENANCE OPERATIONS	01/27/1997
E-119	UTILITY WORK ZONE	03/01/2004
E-120	STANDARD SIGN PLACEMENT - EXPRESSWAY & FREEWAY	08/08/1995
E-121	STANDARD SIGN PLACEMENT - CONVENTIONAL ROAD	08/08/1995
E-123	GUIDE SIGN PLACEMENT - MISCELLANEOUS DETAILS	03/16/2004
E-125	TRAVEL INFORMATION COUNCIL SIGNS	08/08/1995
E-126	TYPICAL FREEWAY INTERCHANGE SIGNING	02/01/2000
E-130	TYPE "B" GUIDE SIGN, ATTACHMENT DETAILS	08/08/1995
E-131	GUIDE SIGN DETAILS	08/08/1995
E-131B	BICYCLE GUIDE SIGN DETAILS	05/30/2003
E-132	GENERAL MOTORIST SERVICE SIGN DETAILS	08/18/1995
E-133	SERVICE SIGN DETAILS	08/08/1995
E-135	INTERSTATE ROUTE MARKER SIGN DETAIL	08/18/1995
E-136A	U.S. ROUTE MARKER SIGN DETAILS	08/08/1995
E-136B	STATE ROUTE MARKER SIGN DETAILS	08/08/1995
E-136C	STATE NUMBERED TOWN HIGHWAY SIGN DETAILS	08/08/1995
E-140	REGULATORY SIGN DETAILS	08/30/1996
E-142	REGULATORY SIGN DETAILS	09/20/1995
E-143	REGULATORY SIGN DETAILS	06/15/2004
E-143B	REGULATORY SIGN DETAILS	03/15/2005
E-144	REGULATORY SIGN DETAILS	03/29/1999
E-145A	REGULATORY SIGN DETAILS - LANE USE CONTROL SIGNS TWO AND FOUR LANE APPROACHES	12/23/1994
E-145B	REGULATORY SIGN DETAILS - LANE USE CONTROL SIGNS THREE LANE APPROACHES	12/23/1994
E-146	REGULATORY SIGN DETAILS	09/20/1995
E-150	WARNING SIGN DETAILS	05/01/2004
E-151	WARNING SIGN DETAILS	05/01/2004
E-152	WARNING SIGN DETAILS	05/01/2004
E-153B	WARNING SIGN DETAILS	05/30/2003
E-155	WARNING SIGN DETAILS	05/01/2004
E-160	FLANGED CHANNEL STEEL SIGN POST	05/20/1999
E-161	W-SHAPED STEEL SIGN POST	08/18/1995
E-162	TUBULAR ALUMINUM SIGN POST	05/20/1999
E-163	TUBULAR STEEL SIGN POST	05/20/1999
E-164	SQUARE STEEL SIGN POST	05/20/1999
E-170	TRAFFIC CONTROL SIGNALS PEDESTAL POST MOUNTED	11/04/1999
E-171A	TRAFFIC CONTROL SIGNALS GENERAL NOTES & DETAILS	08/09/1995
E-171B	TRAFFIC CONTROL SIGNALS MISC. DETAILS	08/09/1995
E-171C	TRAFFIC CONTROL SIGNALS CANTILEVER MOUNTING DETAILS PED. PUSH BUTTON ACCESSIBILITY DETAIL	08/09/1995
E-172	VEHICLE DETECTOR LOOP DETAILS	08/09/1995
E-173	PULL BOXES AND JUNCTION BOXES	08/09/1995
E-175	POWER DROP STANCHIONS	11/17/1993
E-180A	STREET LIGHTING DETAILS	08/09/1995
E-180B	STREET LIGHTING DETAILS	08/09/1995
E-191	PAVEMENT MARKING DETAILS	02/01/1999
E-192	PAVEMENT MARKING DETAILS	10/12/2000
E-193	PAVEMENT MARKING DETAILS	08/18/1995
E-194	BICYCLE PAVEMENT MARKINGS AND SIGN LAYOUT	03/15/2005
E-197	DELINEATOR PLACEMENT TYPICAL	04/01/2005
E-198	FREEWAY - EXPRESSWAY DELINEATORS AND MILEPOSTS	04/01/2005

G-1	STEEL BEAM GUARDRAIL WITH STEEL POSTS STEEL BEAM GUARDRAIL WITH WOOD POSTS	01/03/2000
G-1D	STEEL BEAM GUARDRAIL APPROACH END TERMINAL STEEL BEAM GUARDRAIL TRAILING END TERMINAL ANCHOR FOR STEEL BEAM GUARDRAIL STEEL BEAM MEDIAN BARRIER	01/03/2000
G-18	PRECAST CONCRETE TEMPORARY TRAFFIC BARRIER	06/01/1994
G-19	GENERIC GRADING PLANS FOR GUARDRAIL END TERMINALS	11/15/2002

DATUM

VERTICAL NAVD 88

HORIZONTAL NAD 83 (1996)

PROJECT NAME: SOUTH BURLINGTON

PROJECT NUMBER: IM 089-3(37)

FILE NAME: z03al78frm.dgn
PROJECT LEADER: KEN UPMAL
DESIGNED BY: E.ATKINS

PLOT DATE: 5/5/2006
DRAWN BY: P.MILEWSKI
CHECKED BY: K.ISHIKURA
SHEET 2 OF 99

MATERIAL ITEM	THICKNESS TOLERANCE
PAVEMENT (TOTAL DEPTH ALL LAYERS)	+/- 1/4"
BASE COURSE	+/- 1/2"
SUBBASE	+/- 1"
SAND BORROW	+/- 1"

RAMP "C" TWO LANE

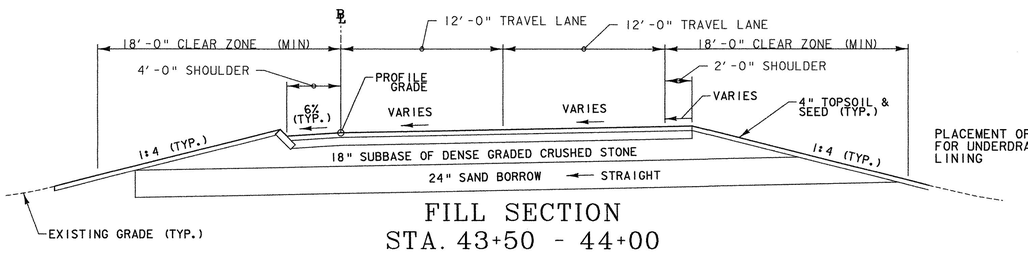

FILL SECTION
STA. 43+50 - 44+00

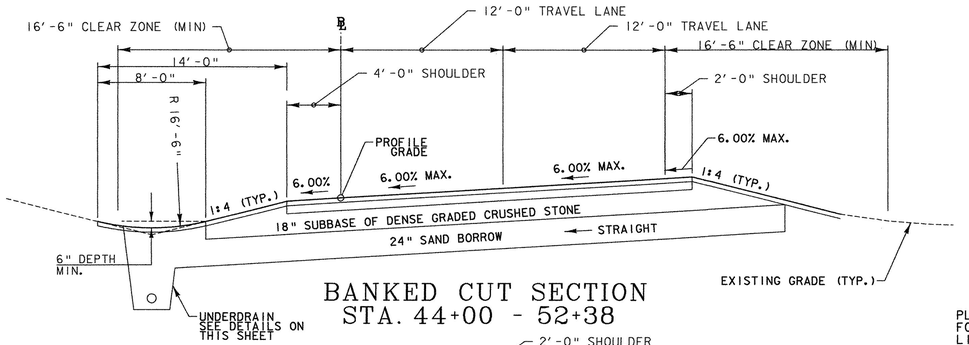

BANKED CUT SECTION
STA. 44+00 - 52+38

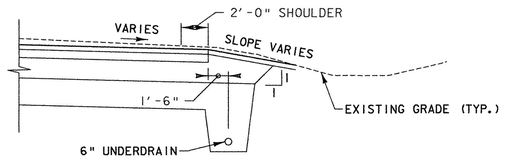

BANKED CUT SECTION WITH UNDERDRAIN ON RIGHT
STA. 46+50 - 49+00

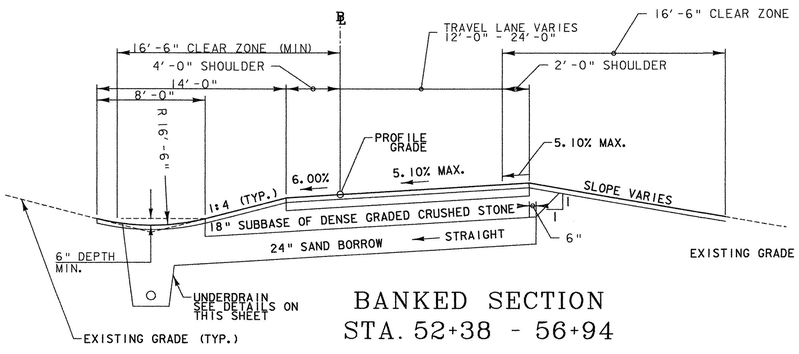

BANKED SECTION
STA. 52+38 - 56+94

TYPICAL SECTIONS

4" SUPERPAVE BITUMINOUS CONCRETE PAVEMENT IN TWO 2" LIFTS (TYPE IIIS PG 70-28)
7" SUPERPAVE BITUMINOUS CONCRETE PAVEMENT IN TWO 3 1/2" LIFTS (TYPE IS PG 70-28)
18" SUBBASE OF DENSE GRADED CRUSHED STONE
24" SAND BORROW

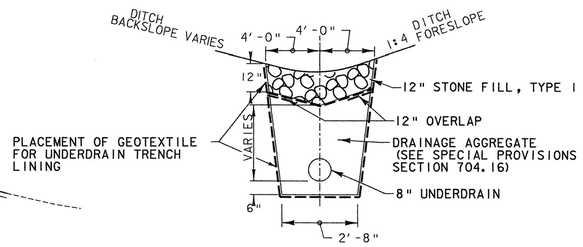

TYPICAL STONE LINED DITCH WITH UNDERDRAIN
RAMP "C" STA. 44+00 ~ 44+50
RAMP "C" STA. 46+00 ~ 53+50
RAMP "C" STA. 59+50 ~ 60+00
RAMP "D" STA. 74+39 ~ 76+06

NOT TO SCALE

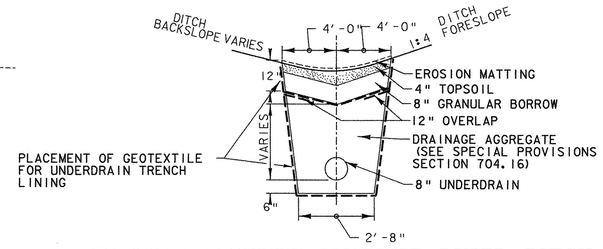

TYPICAL EROSION MATTING LINED DITCH WITH UNDERDRAIN
RAMP "C" STA. 44+50 ~ 46+00
RAMP "C" STA. 53+50 ~ 59+50

NOT TO SCALE

RAMP "C" SINGLE LANE

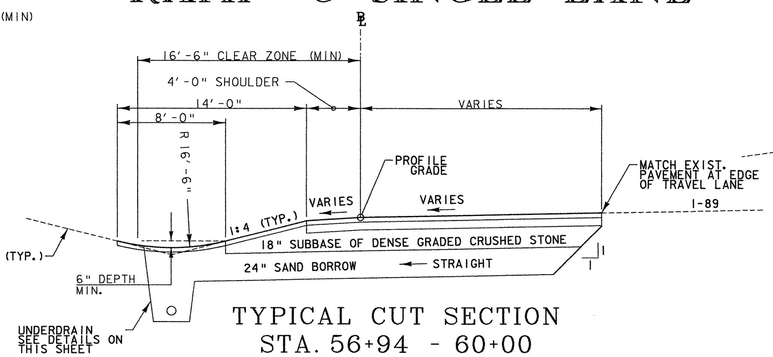

TYPICAL CUT SECTION
STA. 56+94 - 60+00

SEEDING FORMULAS

SEEDING MIXTURE TYPE 'E' FOR GENERAL USE

% WT.	LBS./A.	NAME	PUR %	GERM %
37.7	20.0	TALL FESCUE	95	90
56.6	30.0	FLATPEA	95	90
5.7	3.0	ANNUAL RYEGRASS	95	90
100.0	53.0			

SEEDING MIXTURE TYPE 'C' FOR USE IN GRASS SWALES

% WT.	LBS./A.	NAME	PUR %	GERM %
41.7	20.0	TALL FESCUE	95	90
41.7	20.0	CREEPING RED FESCUE	95	90
16.6	8.0	BIRDSFOOT TREFOIL	95	90
100.0	48.0			

GENERAL NOTES

SEED MIXTURE: THE SEEDING MIXTURES WERE ADOPTED FROM THE DRAFT VERMONT HANDBOOK FOR SOIL EROSION AND SEDIMENT CONTROL ON CONSTRUCTION SITES. THE SEED MIXTURE SHALL NOT HAVE A WEED CONTENT EXCEEDING 0.40% BY WEIGHT AND SHALL BE FREE OF ALL NOXIOUS SEED.

SEED: TO BE APPLIED PER SEEDING FORMULAS OR AS DIRECTED BY THE ENGINEER.

FERTILIZER: FORMULA 10-20-10, TO BE USED WITH SEED, APPLIED AT THE RATE OF 500 LBS./ACRE. (HYDRO SEEDERS MAY USE 19-19-19 FORMULA).

AGRICULTURAL LIMESTONE: TO BE APPLIED AT THE RATE OF 2 TONS/ACRE, OR AS DIRECTED BY THE ENGINEER.

HAY MULCH: TO BE PLACED ON EARTH SLOPES AT THE RATE OF 2 TONS/ACRE, OR AS DIRECTED BY THE ENGINEER.

TOPSOIL: TO BE USED WITH SEED AS INDICATED ON THE PLANS, OR AS DIRECTED BY THE ENGINEER.

MARKER POSTS: TO BE PLACED AS INDICATED OR AS DIRECTED BY THE ENGINEER.

SLOPE ROUNDING: ALL CUT SLOPES TO BE ROUNDED IN ACCORDANCE WITH STANDARD SHEET B - 5.

TACK COAT: EMULSIFIED ASPHALT IS TO BE APPLIED AT THE RATE OF 0.015 GAL/SY BETWEEN SUCCESSIVE COURSES OF PAVEMENT AS DIRECTED BY THE ENGINEER.

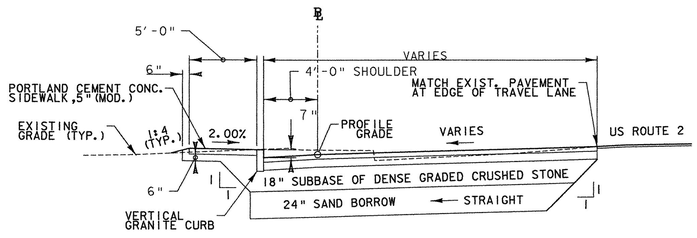

TYPICAL SECTION WITH SIDEWALK
STA. 41+00 - 43+14

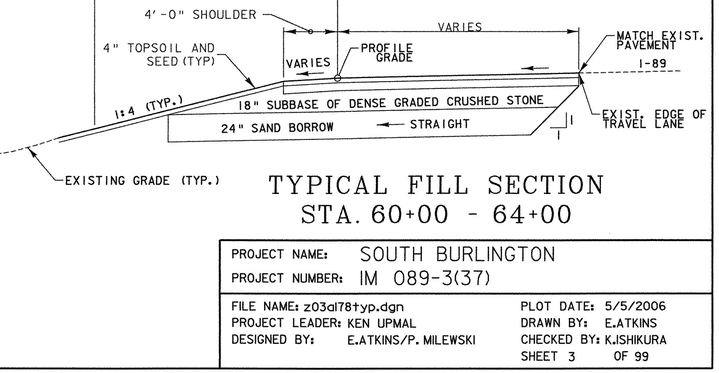

TYPICAL FILL SECTION
STA. 60+00 - 64+00

PROJECT NAME:	SOUTH BURLINGTON
PROJECT NUMBER:	IM 089-3(37)
FILE NAME: z03al78typ.dgn	PLOT DATE: 5/5/2006
PROJECT LEADER: KEN UPMAL	DRAWN BY: E.ATKINS
DESIGNED BY: E.ATKINS/P. MILEWSKI	CHECKED BY: K.ISHIKURA
	SHEET 3 OF 99

MATERIAL ITEM	THICKNESS TOLERANCE
PAVEMENT (TOTAL DEPTH ALL LAYERS)	+/- 1/4"
BASE COURSE	+/- 1/2"
SUBBASE	+/- 1"
SAND BORROW	+/- 1"

TYPICAL SECTIONS

4" SUPERPAVE BITUMINOUS CONCRETE PAVEMENT IN TWO 2" LIFTS (TYPE IIIS PG 70-28)
7" SUPERPAVE BITUMINOUS CONCRETE PAVEMENT IN TWO 3 1/2" LIFTS (TYPE IS PG 70-28)
18" SUBBASE OF DENSE GRADED CRUSHED STONE
24" SAND BORROW

RAMP "C" TWO LANE

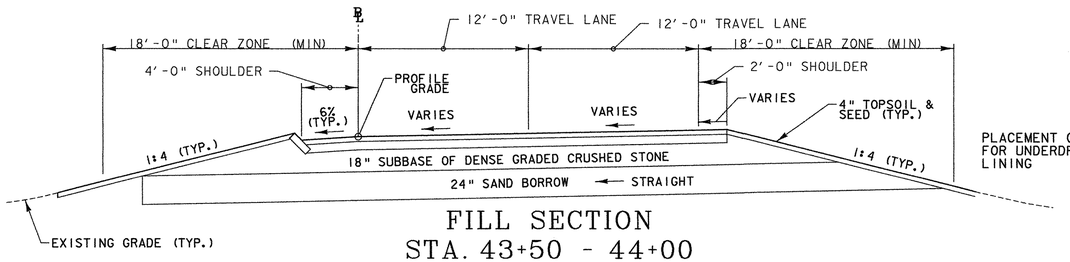

FILL SECTION
STA. 43+50 - 44+00

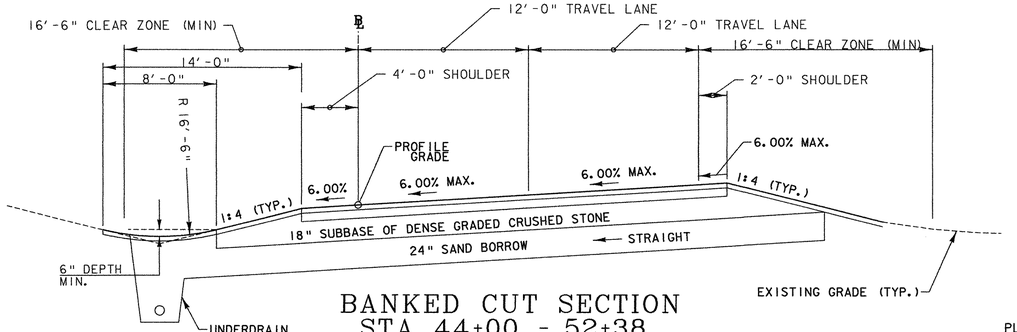

BANKED CUT SECTION
STA. 44+00 - 52+38

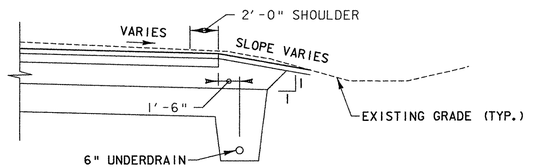

BANKED CUT SECTION WITH UNDERDRAIN ON RIGHT
STA. 46+50 - 49+00

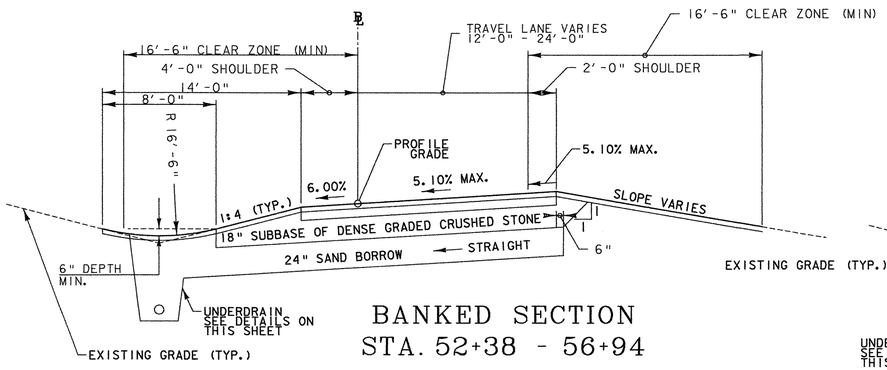

BANKED SECTION
STA. 52+38 - 56+94

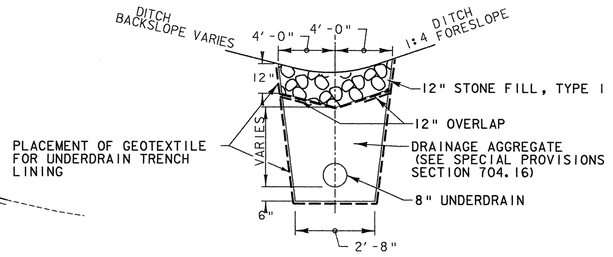

TYPICAL STONE LINED DITCH
WITH UNDERDRAIN
RAMP "C" STA. 44+00 ~ 44+50
RAMP "C" STA. 46+00 ~ 53+50
RAMP "C" STA. 59+50 ~ 60+00
RAMP "D" STA. 74+39 ~ 76+06

NOT TO SCALE

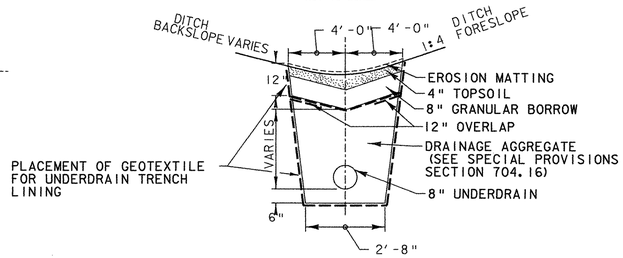

TYPICAL EROSION MATTING LINED DITCH
WITH UNDERDRAIN
RAMP "C" STA. 44+50 ~ 46+00
RAMP "C" STA. 53+50 ~ 59+50

NOT TO SCALE

RAMP "C" SINGLE LANE

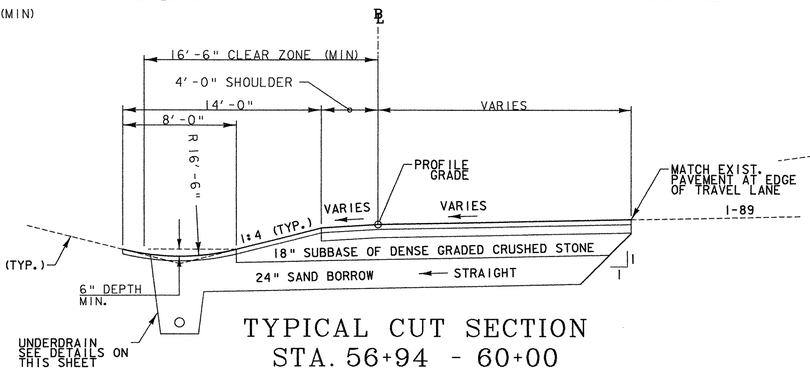

TYPICAL CUT SECTION
STA. 56+94 - 60+00

SEEDING FORMULAS

SEEDING MIXTURE TYPE 'E' FOR GENERAL USE

% WT.	LBS./A.	NAME	PUR %	GERM %
37.7	20.0	TALL FESCUE	95	90
56.6	30.0	FLATPEA	95	90
5.7	3.0	ANNUAL RYEGRASS	95	90
100.0	53.0			

SEEDING MIXTURE TYPE 'C' FOR USE IN GRASS SWALES

% WT.	LBS./A.	NAME	PUR %	GERM %
41.7	20.0	TALL FESCUE	95	90
41.7	20.0	CREEPING RED FESCUE	95	90
16.6	8.0	BIRDSFOOT TREFOIL	95	90
100.0	48.0			

GENERAL NOTES

SEED MIXTURE: THE SEEDING MIXTURES WERE ADOPTED FROM THE DRAFT VERMONT HANDBOOK FOR SOIL EROSION AND SEDIMENT CONTROL ON CONSTRUCTION SITES. THE SEED MIXTURE SHALL NOT HAVE A WEED CONTENT EXCEEDING 0.40% BY WEIGHT AND SHALL BE FREE OF ALL NOXIOUS SEED.

SEED: TO BE APPLIED PER SEEDING FORMULAS OR AS DIRECTED BY THE ENGINEER.

FERTILIZER: FORMULA 10-20-10, TO BE USED WITH SEED, APPLIED AT THE RATE OF 500 LBS./ACRE. (HYDRO SEEDERS MAY USE 19-19-19 FORMULA).

AGRICULTURAL LIMESTONE: TO BE APPLIED AT THE RATE OF 2 TONS/ACRE, OR AS DIRECTED BY THE ENGINEER.

HAY MULCH: TO BE PLACED ON EARTH SLOPES AT THE RATE OF 2 TONS/ACRE, OR AS DIRECTED BY THE ENGINEER.

TOPSOIL: TO BE USED WITH SEED AS INDICATED ON THE PLANS, OR AS DIRECTED BY THE ENGINEER.

MARKER POSTS: TO BE PLACED AS INDICATED OR AS DIRECTED BY THE ENGINEER.

SLOPE ROUNDING: ALL CUT SLOPES TO BE ROUNDED IN ACCORDANCE WITH STANDARD SHEET B - 5.

TACK COAT: EMULSIFIED ASPHALT IS TO BE APPLIED AT THE RATE OF 0.015 GAL/SY BETWEEN SUCCESSIVE COURSES OF PAVEMENT AS DIRECTED BY THE ENGINEER.

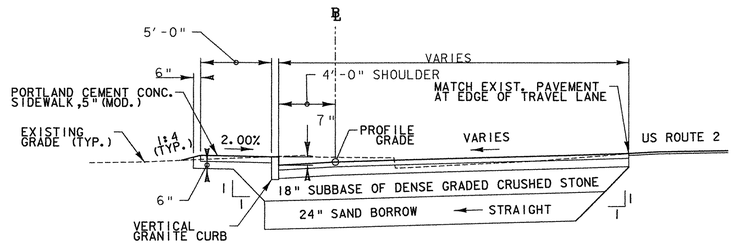

TYPICAL SECTION WITH SIDEWALK
STA. 41+00 - 43+14

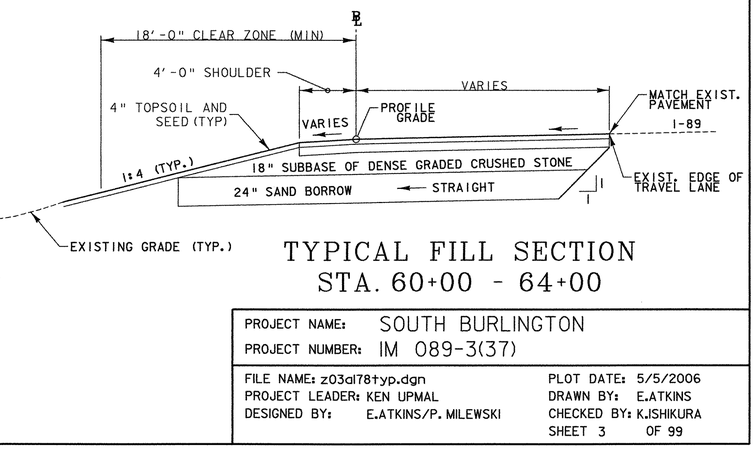

TYPICAL FILL SECTION
STA. 60+00 - 64+00

PROJECT NAME:	SOUTH BURLINGTON
PROJECT NUMBER:	IM 089-3(37)
FILE NAME: z03al78typ.dgn	PLOT DATE: 5/5/2006
PROJECT LEADER: KEN UPMAL	DRAWN BY: E.ATKINS
DESIGNED BY: E.ATKINS/P. MILEWSKI	CHECKED BY: K.ISHIKURA
	SHEET 3 OF 99

TYPICAL SECTIONS

MATERIAL ITEM	THICKNESS TOLERANCE
PAVEMENT (TOTAL DEPTH ALL LAYERS)	+/- 1/4"
BASE COURSE	+/- 1/2"
SUBBASE	+/- 1"
SAND BORROW	+/- 1"

4" SUPERPAVE BITUMINOUS CONCRETE PAVEMENT IN TWO 2" LIFTS (TYPE IIIS PG 70-28)
7" SUPERPAVE BITUMINOUS CONCRETE PAVEMENT IN TWO 3 1/2" LIFTS (TYPE IS PG 70-28)
18" SUBBASE OF DENSE GRADED CRUSHED STONE
24" SAND BORROW

RAMP "D"

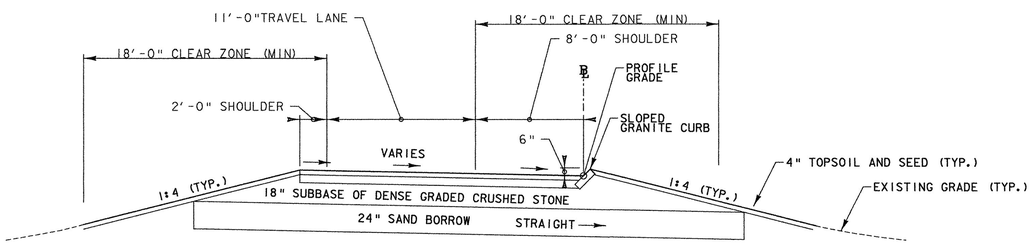

STA. 73+00 - 74+00

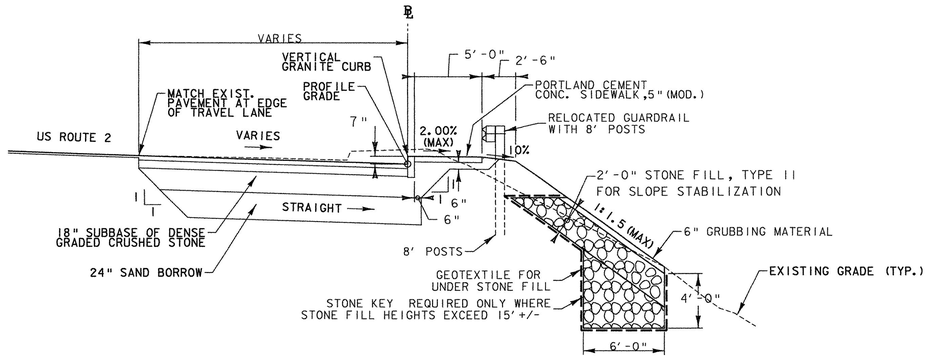

TYPICAL SECTION WITH SIDEWALK
STA. 70+82 - 73+00

ROUTE 2

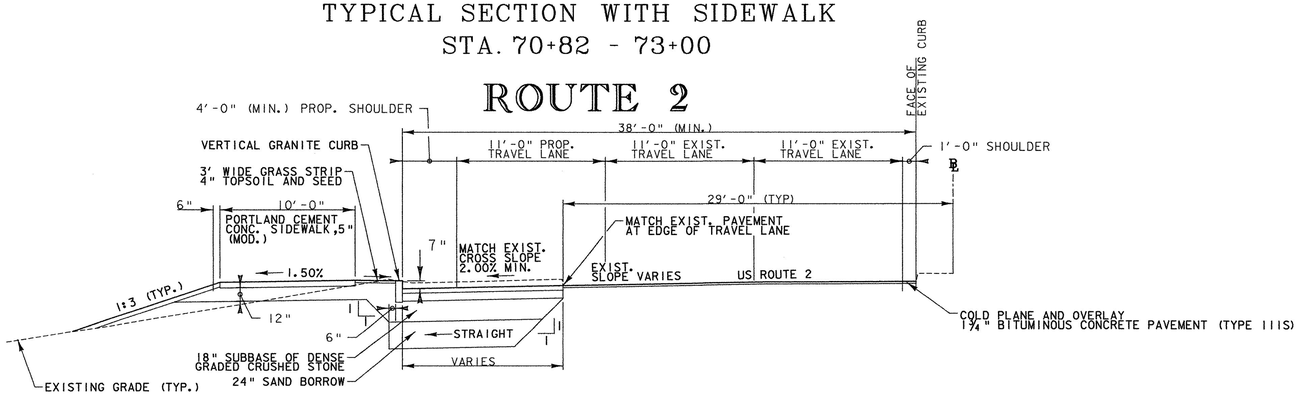

ROUTE 2 WIDENED SECTION
STA. 21+28 - 24+83

SEEDING FORMULAS

SEEDING MIXTURE TYPE 'E' FOR GENERAL USE

% WT.	LBS./A.	NAME	PUR %	GERM %
37.7	20.0	TALL FESCUE	95	90
56.6	30.0	FLATPEA	95	90
5.7	3.0	ANNUAL RYEGRASS	95	90
100.0	53.0			

SEEDING MIXTURE TYPE 'C' FOR USE IN GRASS SWALES

% WT.	LBS./A.	NAME	PUR %	GERM %
41.7	20.0	TALL FESCUE	95	90
41.7	20.0	CREEPING RED FESCUE	95	90
16.6	8.0	BIRDSFOOT TREFOIL	95	90
100.0	48.0			

GENERAL NOTES

SEED MIXTURE: THE SEEDING MIXTURES WERE ADOPTED FROM THE DRAFT VERMONT HANDBOOK FOR SOIL EROSION AND SEDIMENT CONTROL ON CONSTRUCTION SITES. THE SEED MIXTURE SHALL NOT HAVE A WEED CONTENT EXCEEDING 0.40% BY WEIGHT AND SHALL BE FREE OF ALL NOXIOUS SEED.

SEED: TO BE APPLIED PER SEEDING FORMULAS OR AS DIRECTED BY THE ENGINEER.

FERTILIZER: FORMULA 10-20-10, TO BE USED WITH SEED, APPLIED AT THE RATE OF 500 LBS./ACRE. (HYDRO SEEDERS MAY USE 19-19-19 FORMULA).

AGRICULTURAL LIMESTONE: TO BE APPLIED AT THE RATE OF 2 TONS/ACRE, OR AS DIRECTED BY THE ENGINEER.

HAY MULCH: TO BE PLACED ON EARTH SLOPES AT THE RATE OF 2 TONS/ACRE, OR AS DIRECTED BY THE ENGINEER.

TOPSOIL: TO BE USED WITH SEED AS INDICATED ON THE PLANS, OR AS DIRECTED BY THE ENGINEER.

MARKER POSTS: TO BE PLACED AS INDICATED OR AS DIRECTED BY THE ENGINEER.

SLOPE ROUNDING: ALL CUT SLOPES TO BE ROUNDED IN ACCORDANCE WITH STANDARD SHEET B - 5.

TACK COAT: EMULSIFIED ASPHALT IS TO BE APPLIED AT THE RATE OF 0.015 GAL/SY BETWEEN SUCCESSIVE COURSES OF PAVEMENT AS DIRECTED BY THE ENGINEER.

PROJECT NAME: SOUTH BURLINGTON
PROJECT NUMBER: IM 089-3(37)

FILE NAME: z03d178typ.dgn
PROJECT LEADER: KEN UPMAL
DESIGNED BY: E.ATKINS/P. MILEWSKI
PLOT DATE: 5/5/2006
DRAWN BY: E.ATKINS
CHECKED BY: K.ISHIKURA
SHEET 4 OF 99

STATE OF VERMONT
AGENCY OF TRANSPORTATION

QUANTITY SHEET

SUMMARY OF ESTIMATED QUANTITIES

ROADWAY	EROSION CONTROL	CONSTRUCTION ENGINEERING
1		
14500		
130		
7000		
150		
10000		
1200		
35		
3050		
6200		
32		
1		
5340		
5		
6		
10		
16		
590		
590		
96		
96		
1		
1		
10		
1		
1		
3		
250		
1600		
150		
175		
10		
25		
25		

TOTALS

GRAND TOTAL	FINAL
1	
14500	
130	
7000	
150	
10000	
1200	
35	
3050	
6200	
32	
1	
5340	
5	
6	
10	
16	
590	
590	
96	
96	
1	
1	
10	
1	
1	
3	
250	
1600	
150	
175	
10	
25	
25	

DESCRIPTIONS

UNIT	ITEMS	ITEM NUMBER	ROUND
LS	CLEARING AND GRUBBING (INCL. INDV. TREES & STUMPS)	201.10	-
CY	COMMON EXCAVATION	203.15	361.3
CY	EXCAVATION OF SURFACES AND PAVEMENTS	203.28	2.8
CY	SAND BORROW	203.31	131.9
CY	GRANULAR BORROW	203.32	4.2
SY	FINE GRADING-SUBGRADE	203.40	188.2
CY	TRENCH EXCAVATION OF EARTH	204.20	82.4
CY	TRENCH EXCAVATION OF ROCK	204.21	5.9
SY	COLD PLANING-BIT.PAVEMENT	210.10	80.5
CY	SUBBASE OF DENSE GRADED CRUSHED STONE	301.35	261.6
CWT	EMULSIFIED ASPHALT	404.65	.4
LU	PRICE ADJUSTMENT ASPHALT CEMENT (N.A.B.I.)	406.50	-
TON	SUPERPAVE BITUMINOUS CONCRETE PAVEMENT (PG 70-28)	490.30	27.2
CY	CONCRETE, CLASS B	501.25	3.8
CY	CONCRETE CLASS D (MOD.)	501.31	.3
LF	18" RCP CLASS III	601.0815	-
LF	12" CPEP(SL)	601.2605	-
	BEGIN OPTION AA		
LF	18" RCP CLASS III	601.0815	-
LF	18" CPEP(SL)	601.2615	-
	END OPTION AA		
	BEGIN OPTION BB		
LF	24" RCP CLASS III	601.0825	-
LF	24" CPEP(SL)	601.2620	-
	END OPTION BB		
	BEGIN OPTION CC		
EACH	24"RCPES CLASS III	601.6825	-
EACH	24" CPEPES	601.7020	-
	END OPTION CC		
EACH	PRECAST REINFORCED CONC. CATCH BASIN WITH CAST IRON GRATE	604.20	-
EACH	PRECAST REINFORCED CONCRETE MANHOLE WITH CAST IRON COVER	604.21	-
EACH	PRECAST REINFORCED CONCRETE MANHOLE WITH CAST IRON COVER (MOD. - DIVERSION MANHOLE)	604.21	-
EACH	CHANGING ELEV. OF DROP INLETS, CATCH BASINS OR MANHOLES	604.40	-
LF	6" UNDERDRAIN	605.10	6
LF	8" UNDERDRAIN	605.11	57
LF	6" UNDERDRAIN CARRIER PIPE	605.20	38
LF	8" UNDERDRAIN CARRIER PIPE	605.21	36
EACH	UNDERDRAIN FLUSHING BASINS	605.95	-
HR	ALL PURPOSE EXCAVATOR RENTAL, TYPE I	608.25	-
HR	POWER BROOM RENTAL	608.30	-

DETAILED SUMMARY OF QUANTITIES

QUANTITIES	UNIT	ITEMS
COMMON EXCAVATION		
10852	CY	RAMP "C"
1171.7	CY	US ROUTE 2
1942	CY	RAMP "D"
173	CY	TEMPORARY WIDENING
361.3	CY	ROUNDING
14500	CY	TOTAL
SAND BORROW		
5811.7	CY	RAMP "C"
427	CY	US ROUTE 2
629.4	CY	RAMP "D"
131.9	CY	ROUNDING
7000	CY	TOTAL
FINE GRADING - SUBGRADE		
8297.3	SY	RAMP "C"
569.7	SY	US ROUTE 2
944.8	SY	RAMP "D"
188.2	SY	ROUNDING
10000	SY	TOTAL
TRENCH EXCAVATION OF EARTH		
455.1	CY	PROPOSED DRAINAGE
118	CY	EXISTING DRAINAGE
544.5	CY	UNDERDRAIN
82.4	CY	ROUNDING
1200	CY	TOTAL
SUBBASE OF DENSE GRADED CRUSHED STONE		
4656.3	CY	RAMP "C"
578.5	CY	US ROUTE 2
566.6	CY	RAMP "D"
137	CY	TEMPORARY WIDENING
261.6	CY	ROUNDING
6200	CY	TOTAL
SUPERPAVE BITUMINOUS CONCRETE PAVEMENT (PG70-28)		
		RAMP "C"
1457.1	TON	TYPE IIIS
2549.9	TON	TYPE IS
		US ROUTE 2
251.4	TON	TYPE IIIS
440	TON	TYPE IS
		RAMP "D"
164.7	TON	TYPE IIIS
288.2	TON	TYPE IS
		TEMPORARY WIDENING
72.3	TON	TYPE IS RAMP "C"
89.2	TON	TYPE IS RAMP "D"
27.2	TON	ROUNDING
5340	TON	TOTAL
EROSION CONTROL		
60	CY	STONE FILL, TYPE I (MOD. STONE CHECK DAMS)
750	SY	GEOTEXTILE FOR SILT FENCE
15	SY	GEOTEXTILE FOR FILTER CURTAIN
24	SY	GEOTEXTILE FOR FILTERS
200	LB	SEED (WINTER RYE)
5	TON	HAY MULCH
1300	SY	EROSION MATTING

PROJECT NAME: **SOUTH BURLINGTON**
PROJECT NUMBER: **IM 089-3(37)**

FILE NAME: **Z03A178QTY.XLS**
PROJECT MANAGER: **KEN UPMAL**
DESIGNED BY: **E. ATKINS**
QUANTITY SHEET #1

PLOT DATE: **05/22/2006**
DRAWN BY: **E. ATKINS**
CHECKED BY: **K. ISHIKURA**
SHEET **5** OF **99**

STATE OF VERMONT
AGENCY OF TRANSPORTATION

QUANTITY SHEET

SUMMARY OF ESTIMATED QUANTITIES				TOTALS		DESCRIPTIONS				DETAILED SUMMARY OF QUANTITIES		
ROADWAY	EROSION CONTROL	CONSTRUCTION ENGINEERING		GRAND TOTAL	FINAL	UNIT	ITEMS	ITEM NUMBER	ROUND	QUANTITIES	UNIT	ITEMS
25				25		HR	TRUCK RENTAL	608.37	-			
	100			100		MGAL	DUST CONTROL WITH WATER	609.10	-			
	10			10		TON	DUST AND ICE CONTROL WITH CALCIUM CHLORIDE	609.15	-			
360	60			420		CY	STONE FILL, TYPE I	613.10	7.8			
	60			60		CY	STONE FILL, TYPE I (MOD. - CHECK DAM)	613.10	-			
	80			80		CY	STONE FILL, TYPE I (MOD. - CONSTRUCTION ENTRANCE)	613.10	26.2			
	6			6		CY	STONE FILL, TYPE I (MOD. - INLET PROTECTION)	613.10	3.4			
220				220		CY	STONE FILL, TYPE II	613.11	14			
1070				1070		LF	REMOVING AND RESETTING CURB	616.40	11			
510				510		LF	REMOVAL OF EXISTING CURB	616.41	12			
800				800		SY	PORTLAND CEMENT CONCRETE SIDEWALK, 5 INCH (MOD.)	618.10	25			
15				15		SY	DETECTABLE WARNING SURFACE	618.30	3.5			
24				24		EACH	YIELDING MARKER POSTS	619.17	-			
	4000			4000		LF	SNOW FENCE (MOD. - PDF)	620.70	276			
75				75		LF	STEEL BEAM GUARD RAIL (GALVANIZED)	621.20	-			
1				1		EACH	MANUFACTURED TERMINAL SECTION (FLARED)	621.505	-			
1				1		EACH	TRAILING END TERMINAL	621.52	-			
239				239		LF	REMOVING AND RESET GUARD RAIL (MOD. - 8' POSTS)	621.75	-			
250				250		LF	REMOVL AND DISP OF GUARD RAIL	621.80	-			
4				4		EACH	ADJUST ELEVATION OF VALVE BOX	629.20	-			
1600				1600		HR	UNIFORMED TRAFFIC OFFICERS	630.10	-			
800				800		HR	FLAGGERS	630.15	-			
		1		1		LS	FIELD OFFICE-ENGINEERS	631.10	-			
		1		1		LS	TESTING EQUIPMENT - CONCRETE	631.16	-			
		1		1		LS	TESTING EQUIPMENT - BITUMINOUS	631.17	-			
		1		1		LU	FIELD OFFICE - TELEPHONE (N.A.B.I.)	631.25	-			
1				1		LS	MOBILIZATION / DEMOBILIZATION	635.11	-			
1				1		LS	TRAFFIC CONTROL	641.10	-			
1				1		LS	PUBLIC RELATIONS OFFICER	641.12	-			
600				600		DAY	PORTABLE CHANGEABLE MESSAGE SIGN RENTAL	641.17	-			
3302				3302		LF	DURABLE 4" WHITE LINE	646.40	-			
3212				3212		LF	DURABLE 6" WHITE LINE	646.414	-			
2901				2901		LF	DURABLE 6" YELLOW LINE	646.415	-			
2299				2299		LF	DURABLE 4" YELLOW LINE	646.41	-			
54				54		LF	DURABLE 8" YELLOW LINE	646.43	-			
2704				2704		LF	DURABLE 12" WHITE LINE	646.44	-			
177				177		LF	DURABLE 24" STOP BAR	646.46	-			
66				66		EACH	DURABLE LETTER OR SYMBOL	646.50	-			
74				74		LF	DURABLE CROSSWALK MARKING W/DIAGONAL LINES (MOD. - BLOCK TYPE)	646.51	-			
24600				24600		LF	TEMPORARY 4" WHITE LINE	646.60	-			

PROJECT NAME: **SOUTH BURLINGTON**
PROJECT NUMBER: **IM 089-3(37)**

FILE NAME: **Z03A178QTY.XLS**
PROJECT MANAGER: **KEN UPMAL**
DESIGNED BY: **E. ATKINS**
QUANTITY SHEET #2

PLOT DATE: **05/22/2006**
DRAWN BY: **E. ATKINS**
CHECKED BY: **K. ISHIKURA**
SHEET **6** OF **99**

STATE OF VERMONT
AGENCY OF TRANSPORTATION

QUANTITY SHEET

SUMMARY OF ESTIMATED QUANTITIES			TOTALS		DESCRIPTIONS				DETAILED SUMMARY OF QUANTITIES		
ROADWAY	EROSION CONTROL	CONSTRUCTION ENGINEERING	GRAND TOTAL	FINAL	UNIT	ITEMS	ITEM NUMBER	ROUND	QUANTITIES	UNIT	ITEMS
4600			4600		LF	TEMPORARY 4" YELLOW LINE	646.61	-			
120			120		LF	TEMPORARY 8" YELLOW LINE	646.63	-			
2900			2900		LF	TEMPORARY 12" WHITE LINE	646.64	-			
430			430		LF	TEMPORARY 24" STOP BAR	646.66	-			
189			189		EACH	TEMPORARY LETTERS OR SYMBOLS	646.70	-			
220			220		LF	TEMPORARY CROSSWALK MARKING W/DIAGONAL LINES (MOD. - BLOCK TYPE)	646.71	-			
3600			3600		SF	PAINTED ISLAND (MOD. - GREEN BIKE PATH)	646.82	-			
7500			7500		SF	REMOVAL OF EXISTING PAVEMENT MARKINGS	646.85	368			
	24		24		SY	GEOTEXTILE FABRIC FOR FILTERS	649.10	6			
300			300		SY	GEOTEXTILE FOR ROADBED SUBGRADE SEPARATOR	649.11	276.6			
1200			1200		SY	GEOTEXTILE UNDER STONE FILL	649.31	114.8			
300			300		SY	GEOTEXTILE UNDER STONE FILL (MOD. - GEOMEMBRANE)	649.31	21.2			
5000			5000		SY	GEOTEXTILE FOR UNDERDRAIN TRENCH LINING	649.41	198			
	750		750		SY	GEOTEXTILE FOR SILT FENCE	649.51	79			
	15		15		SY	GEOTEXTILE FOR FILTER CURTAIN	649.61	5.8			
	200		200		LB	SEED	651.15	85			
	200		200		LB	SEED-WINTER RYE	651.17	85			
	1150		1150		LB	FERTILIZER	651.18	60			
	5		5		TON	AGRICULTURAL LIMESTONE	651.20	.6			
	5		5		TON	HAY MULCH	651.25	.6			
	1250		1250		CY	TOPSOIL	651.35	52.6			
150			150		SY	GRUBBING MATERIAL	651.40	23.2			
	1		1		LS	EROSION PREVENTION & SEDIMENT CONTROL PLAN	652.10	-			
	200		200		HR	MONITORING EROSION PREVENTION & SEDIMENT CONTROL PLAN	652.20	-			
	1		1		LU	MAINTENANCE OF EROSION PREVENTION & SEDIMENT CONTROL PLAN (N.A.B.I.)	652.30	-			
	1300		1300		SY	EROSION MATTING	654.10	86.3			
159			159		SF	TRAFFIC SIGNS, TYPE A	675.20	-			
538.17			538.17		SF	TRAFFIC SIGNS, TYPE B	675.21	-			
135			135		SF	TRAFFIC SIGNS, TYPE B (MOD. - PATCHEN ROAD BRIDGE)	675.21	-			
						BEGIN OPTION DD					
419			419		LF	FLANGED CHANNEL SIGN POST	675.301	-			
419			419		LF	SQUARE TUBE SIGN POSTS AND ANCHOR	675.341	-			
						END OPTION DD					
1020			1020		LB	W-SHAPE STEEL SIGN POSTS	675.31	-			
56.5			56.5		LF	SQUARE TUBE SIGN POSTS AND ANCHOR	675.341	-			
2			2		EACH	FOUNDATION FOR W-SHAPE STEEL POSTS, 30" DIAMETER	675.42	-			
18			18		EACH	REMOVING SIGNS	675.50	-			
2			2		EACH	REMOVING SIGNS (OVERHEAD SIGN)	675.50	-			
5			5		EACH	ERECTING SALVAGED SIGNS	675.60	-			
40			40		EACH	DELINEATORS W/STEEL POSTS	676.10	-			

PROJECT NAME: **SOUTH BURLINGTON**
PROJECT NUMBER: **IM 089-3(37)**

FILE NAME: **Z03A178QTY.XLS**
PROJECT MANAGER: **KEN UPMAL**
DESIGNED BY: **E. ATKINS**
QUANTITY SHEET #3

PLOT DATE: **05/22/2006**
DRAWN BY: **E. ATKINS**
CHECKED BY: **K. ISHIKURA**
SHEET **7** OF **99**

STATE OF VERMONT
AGENCY OF TRANSPORTATION

QUANTITY SHEET

SUMMARY OF ESTIMATED QUANTITIES			TOTALS		DESCRIPTIONS				DETAILED SUMMARY OF QUANTITIES		
ROADWAY	EROSION CONTROL	CONSTRUCTION ENGINEERING	GRAND TOTAL	FINAL	UNIT	ITEMS	ITEM NUMBER	ROUND	QUANTITIES	UNIT	ITEMS
30			30		EACH	REMOVAL OF EXIST DELINEATORS	676.12	-			
2			2		EACH	OVERHEAD TRAFFIC SIGN SUPPORT, MULTI-SUPPORT	677.13	-			
1			1		EACH	TRAFFIC CONTROL SIGNAL SYSTEM-INTERSECTION (ROUTE 2 @ RAMP "C")	678.15	-			
1			1		EACH	TRAFFIC CONTROL SIGNAL SYSTEM-INTERSECTION (ROUTE 2 @ SHERATON)	678.15	-			
650			650		LF	INTERCONNECTING CABLE	678.20	25			
2300			2300		LF	INTERCONNECTING CABLE (MOD. - CAMERA CABLE)	678.20	100			
611			611		LF	VEHICLE LOOP DETECTOR	678.22	-			
1420			1420		LF	WIRED CONDUIT (1 1/2") (PVC)	678.23	63			
20			2100		LF	WIRED CONDUIT (2 1/2") (PVC)	678.23	5			
1050			1050		LF	WIRED CONDUIT (2") (PVC)	678.23	89			
2100			2100		LF	ELECTRICAL WIRING	678.24	127			
7			7		EACH	PULL BOX - STANDARD	678.25	-			
10			10		EACH	JUNCTION BOX	678.26	-			
1			1		EACH	PULLBOX - DOUBLE (MOD. - RELOCATE ELECTRICAL CABINET)	678.27	-			
230			230		LF	ELECTRICAL CONDUIT SLEEVE (8") (PVC)	678.30	25			
1			1		EACH	TEMPORARY TRAFFIC SIGNAL SYSTEM	678.40	-			
6			6		EACH	LIGHT POLE BASE	679.21	-			
6			6		EACH	REMOVE & RESETTING LIGHT POLE	679.25	-			
1			1		EACH	POWER STANCHION	679.28	-			
1			1		LS	NO EXCUSE BONUS (N.A.B.I.)	995.11	-			

PROJECT NAME: **SOUTH BURLINGTON**
PROJECT NUMBER: **IM 089-3(37)**

FILE NAME: **Z03A178QTY.XLS**
PROJECT MANAGER: **KEN UPMAL**
DESIGNED BY: **E. ATKINS**
QUANTITY SHEET #4

PLOT DATE: **05/22/2006**
DRAWN BY: **E. ATKINS**
CHECKED BY: **K. ISHIKURA**
SHEET **8** OF **99**

STATE OF VERMONT
AGENCY OF TRANSPORTATION

ITEM DETAIL AND DRAINAGE SHEET

STATION	STATION	POS.	ASKEW	INLET/OUTLET TYPE		PIPE		ALLOWABLE OPTIONS			PIPE ELBOW	ES	CB	PRCCDI	DEPTH DI	CONC CLASS B	REINF STEEL	DI GRATE	MANHOLE COVER	CRM	TRENCH EXCAVATION		GRAN BKFILL STRUCT	EROS MATT	STONE FILL		MARKER POSTS		REMARKS
			NO. DEG.	INLET	OUTLET	D IN	L FT	RCP CLASS	CAAP TH	CPEP SL	NO. DEG.	EA	EA		FT	CY	LBS	TYPE	EA	CY	EARTH CY	ROCK CY	CY	SY	CY	TYPE	LT EA	RT EA	
PROPOSED DRAINAGE																													
US ROUTE 2																													
(6) 22+84.5	22+84	LT-LT		DI	OL	18	52	III		X								D			30.0				1.0	I	1		PRECAST REINFORCED CONCRETE DI - OUTLET (1 GRATE) WITH 3'X9' STONE FILL, TYPE I PAD @ OUTLET
RAMP "C"																													
(1) 42+14	42+56.2	LT-LT		DI	MH	18	38	III		X								D	1		28.2								PRECAST REINFORCED CONCRETE DI - 4' DIAMETER PRECAST CONCRETE MANHOLE (1COVER AND 1 GRATE)
(2) 42+51.7	42+56.2	RT-LT		PIPE	MH	18	10	III													4.2								CONNECT EXISTING PIPE TO 4' DIAMETER PRECAST CONCRETE MANHOLE
(3) 42+56.2	42+69.6	LT-LT		MH	DI	18	10	III		X								D			13.5								4' DIAMETER PRECAST CONCRETE MANHOLE - PRECAST REINFORCED CONCRETE DI (1COVER AND 1 GRATE)
(4) 42+69.6	44+76.8	LT-LT		DI	DI	18	190	III		X								B			139.9						1		PRECAST REINFORCED CONCRETE DI - PRECAST REINFORCED CONCRETE DI (1 GRATE EACH)
(5) 44+76.8	44+75	LT-RT		DI	OL	18	82	III		X											45.0				1.8	I		1	PRECAST REINFORCED CONCRETE DI - OUTLET (1 GRATE) WITH 4'X12' STONE FILL, TYPE I PAD @ OUTLET
(13) 53+27.1		LT		DI														B			7.8						1		PRECAST REINFORCED CONCRETE DI CONSTRUCTED ALONG EXISTING PIPE (1 GRATE)
(14) 56+14.1	56+18.1	LT-RT		DI	DI	18	32	III		X								B x2			28.9						1	1	PRECAST REINFORCED CONCRETE DI - PRECAST REINFORCED CONCRETE DI (1 GRATE EACH) EACH DI IS CONSTRUCTED ALONG EXISTING PIPE EXTEND EXIST. PIPE WITH REQUIRED LENGTH
RAMP "D"																													
(7) 72+63.5	72+63.5	LT-LT		DI	DI	18	30	III		X								D			4.8								PRECAST REINFORCED CONCRETE DI - PRECAST REINFORCED CONCRETE DI (1 GRATE EACH)
(8) 72+63.5	73+54	LT-LT		DI	DI	18	88	III		X								D			55.9								PRECAST REINFORCED CONCRETE DI - PRECAST REINFORCED CONCRETE DI (1 GRATE EACH)
(9) 73+54	74+01	LT-LT		DI	OL	18	68	III		X								D			14.3				1.8	I	1		PRECAST REINFORCED CONCRETE DI - OUTLET (1 GRATE) WITH 4'X12' STONE FILL, TYPE I PAD @ OUTLET
(10) 74+25	74+25	LT-RT		INLET	MH	24	60	III		X						1.2			1		61.5						1	1	PIPE INLET - 5' DIA. PRECAST CONCRETE MANHOLE (1 COVER) STP CONTROL STRUCTURE CONSTRUCT 2 CONCRETE STOP DAMS ALONG PIPE
(11) 74+25	74+51.4	RT-RT		MH	OL	24	36	III		X		1									6.3							1	STP CONTROL STRUCTURE - OUTLET 24" OVERFLOW PIPE
(12) 74+25	74+25	RT-RT		MH	OL	12	16			X											14.9				1.8	I		1	STP CONTROL STRUCTURE - OUTLET WITH 4'X12' STONE FILL, TYPE I PAD @ OUTLET 8"X8" TEE AND 8"X12" INCREASER IN STRUCTURE FOR FLOW CONTROL
TOTALS						12 18 24	16 600 96					1				1.2		D=6 B=4	2		455.1				6.4		6	5	

GUARDRAIL

BEGIN STATION	END STATION	POSITION LEFT FT	POSITION RIGHT FT	END TREATMENT LEFT FT	END TREATMENT RIGHT FT
NEW GUARDRAIL					
I-89					
2114+64.7	2115+39.6	75		75	
REMOVE AND REST GUARDRAIL W/ NEW 8' POSTS					
RAMP "D"					
70+69	73+04		239		
TOTALS		75	239	75	

UNDERDRAIN

BEGIN STATION	END STATION	POSITION	TYPE	DIA IN.	LENGTH FT	TRENCH EARTH CY.	TRENCH ROCK CY.	GRAN BKFILL CF	FB EA	MRK. POST EA
46+50	49+00	RT	U	6	244	70.2			2	2
TOTAL 6" UNDERDRAIN PIPE					244	70.2			2	2
44+00	44+76.8	LT	U	8	70	21.9			1	1
44+76.8	47+00	LT	U	8	223	83.3			1	1
47+00	49+41.5	LT	U	8	244	90.9			1	1
49+41.5	52+41.5	LT	U	8	300	110.1			1	1
52+41.5	53+27.1	LT	U	8	84	31.7			-	-
53+27.1	54+00	LT	U	8	72	24.6			1	1
54+00	55+50	LT	U	8	148	43.2			1	1
55+50	56+14.1	LT	U	8	62	7.6			-	-
56+14.1	58+00	LT	U	8	186	20.1			1	1
58+00	59+54	LT	U	8	154	18.8			1	1
TOTAL 8" UNDERDRAIN PIPE					1,543	452.2			8	8
46+50	RISER	RT	C	6	6					
49+00	RISER	RT	C	6	6					
49+00	50+00	RT	C	6	100	16.0			-	1
TOTAL 6" UNDERDRAIN CARRIER PIPE					112	16.0			-	1
44+00	RISER	LT	C	8	4					
47+00	RISER	LT	C	8	5					
49+41.5	RISER	LT	C	8	6					
52+41.5	RISER	LT	C	8	6					
54+00	RISER	LT	C	8	6					
55+00	RISER	LT	C	8	6					
58+00	RISER	LT	C	8	4					
59+54	RISER	LT	C	8	4					
59+54	60+51	LT	C	8	98	6.1			-	1
TOTAL 8" UNDERDRAIN CARRIER PIPE					139	6.1			-	1
TOTALS						544.5			10	12

PROJECT NAME: **SOUTH BURLINGTON**
PROJECT NUMBER: **IM 089-3(37)**

FILE NAME: **Z03A178ITEM.XLS**
PROJECT LEADER: **KEN UPMAL**
DESIGNED BY: **E. ATKINS**
ITEM DETAIL AND DRAINAGE SHEET

PLOT DATE: **05/05/2006**
DRAWN BY: **W. WONG**
CHECKED BY: **K. ISHIKURA**
SHEET **9** OF **99**

STATE OF VERMONT
AGENCY OF TRANSPORTATION

EARTHWORKS

		TOTAL EXCAVATION EARTH AND ROCK		ROCK EXCAVATION		EMBANKMENT			
STATION	DIST	AREA	VOLUME	AREA	VOLUME	AREA	VOLUME	AREA	VOLUME
	FT.	S.F.	C.Y.	S.F.	C.Y.	S.F.	C.Y.	S.F.	C.Y.
				RAMP "C"					
39+00		174.7				0.0			
	50		166.1				0.0		
39+50		4.7				0.0			
	50		6.2				0.0		
40+00		2.1				0.0			
	50		31.4				0.0		
40+50		31.9				0.0			
	50		84.2				0.0		
41+00		59.1				0.0			
	50		110.8				0.0		
41+50		60.6				0.0			
	50		139.0				0.0	CUT =	2,229.4
42+00		89.6				0.0		FILL=	6.9
	50		217.8				0.5	F-FAC=	1.15
42+50		145.7				0.5			
	50		283.9				2.9	EX_C=	2,221.5
43+00		160.9				2.6			
	50		287.2				2.5		
43+50		149.2				0.1			
	50		290.7				0.5		
44+00		164.7				0.5			
	50		305.6				0.5		
44+50		165.4				0.0			
	50		306.5				0.0		
45+00		165.7				0.0			
	50		303.9				0.0		
45+50		162.6				0.0			
	50		305.6				0.0		
46+00		167.5				0.0			
	50		314.9				0.0		
46+50		172.6				0.0			
	50		333.4				0.0		
47+00		187.5				0.0			
	50		356.6				0.0	CUT =	3,473.6
47+50		197.6				0.0		FILL=	6.0
	50		374.0				0.0	F.FAC=	1.15
48+00		206.3				0.0			
	50		375.6				0.0	EX_C=	3,466.7
48+50		199.3				0.0			
	50		367.7				0.0		
49+00		197.8				0.0			
	50		371.8				1.9		
49+50		203.8				2.0			
	50		370.1				4.2		
50+00		195.9				2.5			
	50		366.3				2.8		
50+50		199.7				0.5			
	50		375.0				0.8		
51+00		205.4				0.4			
	50		391.5				0.5		
51+50		217.4				0.2			
	50		373.3				0.1		
52+00		185.8				0.0		CUT =	3,226.8
	50		340.0				1.0	FILL=	150.4
52+50		181.4				1.1		F-FAC=	1.15
	50		332.5				10.2		
53+00		177.7				9.8		EX_C=	3,053.9
	50		323.6				16.5		
53+50		171.8				8.0			
	50		296.6				8.9		
54+00		148.6				1.7			
	50		217.7				4.9		
54+50		86.6				3.6			
	50		125.5				31.3		
55+00		48.9				30.2			
	50		84.8				73.2		
55+50		42.7				48.9			
	50		63.7				105.6		
56+00		26.1				65.2			
	50		54.4				89.4		
56+50		32.6				31.4			
	50		124.4				34.0		
57+00		101.8				5.4			
	50		176.1				8.4	CUT =	1,364.9
57+50		88.4				3.7		FILL=	271.6
	50		154.1				5.3	F-FAC=	1.15
58+00		78.0				2.0			
	50		139.9				2.5	EX_C=	1,052.6
58+50		73.1				0.7			
	50		139.2				1.4		
59+00		77.3				0.8			
	50		133.5				1.8		
59+50		66.9				1.2			
	50		128.5				1.1		
60+00		71.8				0.0			
	50		128.1				6.9		
60+50		66.5				7.4			
	50		123.0				15.2		
61+00		66.4				9.0			

		TOTAL EXCAVATION EARTH AND ROCK		ROCK EXCAVATION		EMBANKMENT			
STATION	DIST	AREA	VOLUME	AREA	VOLUME	AREA	VOLUME	AREA	VOLUME
	FT.	S.F.	C.Y.	S.F.	C.Y.	S.F.	C.Y.	S.F.	C.Y.
61+00		66.4				9.0			
	50		125.7				17.3	CUT =	557.3
61+50		69.4				9.7		FILL=	29.4
	50		130.3				10.5	F-FAC=	1.15
62+00		71.3				1.7			
	50		135.4				1.6	EX_C=	523.5
62+50		74.9				0.0			
	50		114.7				0.0		
63+00		48.9				0.0			
	50		51.1				0.0		
63+50		6.3				0.0			
				RAMP "D"					
71+00		84.3				0.0			
	50		180.2				0.0		
71+50		110.4				0.0			
	50		238.3				9.5		
72+00		147.0				10.3		CUT =	1,942.0
	50		364.7				29.7	FILL=	134.8
72+50		246.9				21.8		F-FAC=	1.15
	50		342.7				42.5		
73+00		123.2				24.1		EX_C=	1,787.0
	50		206.2				23.4		
73+50		99.5				1.1			
	50		190.5				1.5		
74+00		106.2				0.6			
	25		222.8				8.5		
74+25		375.0				17.8			
	7		86.9				5.0		
74+32		306.9				21.4			
	18		109.7				14.6		
74+50		20.1				22.0			
				US RTE 2					
21+05		27.8				0.0			
	45		137.4				0.0		
21+50		137.0				0.0			
	50		206.7				0.0		
22+00		86.2				0.0		CUT =	1,171.7
	50		154.3				11.8	FILL=	96.4
22+50		80.4				12.7		F-FAC=	1.15
	50		149.8				24.7		
23+00		81.4				14.0		EX_C=	1,060.8
	50		158.1				28.1		
23+50		89.4				16.3			
	50		174.5				22.2		
24+00		99.1				7.6			
	50		190.9				9.6		
24+50		107.1				2.8			

		TOTAL EXCAVATION EARTH AND ROCK		ROCK EXCAVATION		EMBANKMENT			
STATION	DIST	AREA	VOLUME	AREA	VOLUME	AREA	VOLUME	AREA	VOLUME
	FT.	S.F.	C.Y.	S.F.	C.Y.	S.F.	C.Y.	S.F.	C.Y.

SUMMARY AND BALANCES

STATION TO STATION		TOT EXC. EARTH & ROCK C.Y.	ROCK EXCAV C.Y.	EMBANK C.Y.	EXCESSES CUT	EXCESSES FILL	ACUMULATIVE EXCESSES CUT	ACUMULATIVE EXCESSES FILL
39+00	45+00	2,229.4		6.9	2,222.5		2,222.5	
45+50	50+00	3,473.6		6.0	3,467.6		5,690.1	
50+50	55+00	3,226.8		150.4	3,076.4		8,766.5	
55+50	60+50	1,364.9		271.6	1,093.3		9,859.8	
61+00	63+50	557.3		29.4	527.9		10,387.7	
71+00	74+50	1,942.0		134.8	1,807.2		12,194.9	
21+05	24+50	1,171.7		96.4	1,075.3		13,270.3	
	TOTALS	13,965.8		695.5	13,270.3			

REMARKS

EXCAVATION FOR TEMPORARY WIDENING	173
EARTH AND ROCK EXCAVATION	13,966
SOLID ROCK EXCAVATION	0
EARTH EXCAVATION	14,139
FILL FOR TEMPORARY WIDENING	137
BACKFILL FOR TRENCH EXCAVATION	270
PLANIMETERED FILL	696
LESS FACTORED SOLID ROCK	
LESS DISPLACEMENT OF ANY LARGE STRUCTURES	
NET PLANIMETERED FILL	
FACTOR	1.15
PLANIMETERED FILL INCLUDING FACTOR	1,268
MATERIALS AVAILABLE FOR FILLS	
EARTH EXCAVATION	14,139
CHANNEL EXCAVATION	
UNDERDRAIN EXCAVATION	545
STRUCTURE EXCAVATION	
TOTAL MATERIAL AVAILABLE FOR FILL	14,684
TOTAL FILL INCLUDING FACTOR	1,268
TOTAL MATERIAL FOR FILL	14,684
BORROW	
EXCESS EXCAVATION	13,416

PROJECT NAME: **SOUTH BURLINGTON**
PROJECT NUMBER: **IM 089-3(37)**

FILE NAME: **Z03A178EWQTY**
PROJECT LEADER: **KEN UPMAL**
DESIGNED BY: **E.ATKINS**
EARTHWORK SHEET #1

PLOT DATE: **05/05/2006**
DRAWN BY: **H.GONSALVES**
CHECKED BY: **K. ISHIKURA**
SHEET **10** OF **99**

GPS CONTROL POINTS

HVCTRL #1

STANDARD DISK STAMPED

CW 1 RESET

N = 19709.85
E = 61835.18
ELEV. = 312.89

TO REACH FROM THE WEST END OF THE WILLISTON ROAD (U.S.ROUTE 2) BRIDGE OVER I-89 AT EXIT 14 IN SOUTH BURLINGTON GO WEST ALONG WILLISTON ROAD FOR 0.2 MI (0.3 KM) TO THE MAIN ENTRANCE TO THE SHERATON INN ON THE RIGHT. TURN RIGHT AND GO NORTH INTO MAIN ENTRANCE AND ALONG ACCESS ROAD ON THE WESTERLY SIDE OF THE SHERATON PARKING LOT FOR 0.1 MI (0.2 KM) TO A SHARP CURVE TO THE EAST. BEAR RIGHT AND GO EAST FOR 0.15 MI, (0.24 KM) PASSING NORTHERLY OF THE SHERATON BUILDINGS, TO THE EASTERLY SIDE OF THE PARKING LOT. PARK VEHICLE AND WALK EAST, PASSING THROUGH A DRAINAGE SWALE, FOR ABOUT 40 M (131.2 FT) TO THE STATION SITE. THE MARK IS A UVM+SAC DISK IN THE TOP OF AN ALUMINUM MONUMENT SET 6 CM BELOW GROUND SURFACE. IT IS 40.6 M (133.2 FT) EAST OF THE EAST EDGE OF THE PARKING LOT, 1.0 M (3.3 FT) WEST OF A 10 CM SQUARE CONCRETE VTDH ROW MONUMENT IN A 1.5 M (4.9 FT) HIGH CHAIN LINK FENCE, 0.4 M (1.3 FT) SOUTHWEST OF A METAL POST, 0.3 M (1.0 FT) SOUTHEAST OF A METAL POST, AND 1.1 M (3.6 FT) WEST-SOUTHWEST OF A STEEL WITNESS POST.

HVCTRL #2

STANDARD DISK STAMPED

C95034

N = 18832.34
E = 61630.13
ELEV. = 332.20

GENERAL LOCATION, SOUTH BURLINGTON, VT. THE MARK IS SET ON TOP OF THE ABUTMENT AT THE SOUTHWEST CORNER OF THE U.S. ROUTE 2 BRIDGE OVER I-89 AT EXIT 14. IT IS 0.3 M (1.0 FT) EAST OF THE WEST END OF THE ABUTMENT, 0.1 M (0.3 FT) NORTH OF THE SOUTH EDGE OF THE ABUTMENT, AND 0.2 M (0.7 FT) SOUTH OF THE SOUTH EDGE OF THE CONCRETE SIDEWALK.

* DESCRIPTION PROVIDED BY VERMONT AGENCY OF TRANSPORTATION GEODETIC SURVEY UNIT
* In order to fit the VT Agency of Transportation Design Plane add 700,000 to the northing and 1,400,000 to the Easting

TRAVERSE TIES

HVCTRL 3#

NORTH = 19043.23
EAST = 61168.36
ELEV. = 337.50

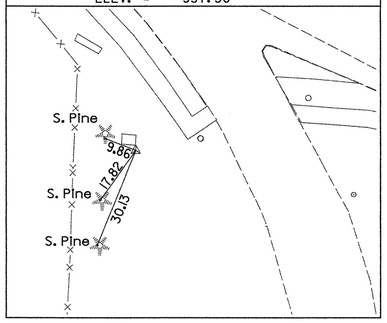

HVCTRL

NORTH =
EAST =
ELEV. =

Points 4 & 5
not Tied

HVCTRL #6

NORTH = 19846.57
EAST = 62091.61
ELEV. = 300.08

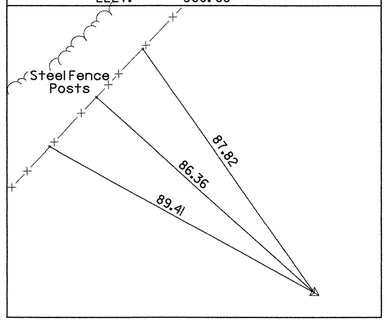

HVCTRL #7

NORTH = 20215.56
EAST = 62419.79
ELEV. = 283.42

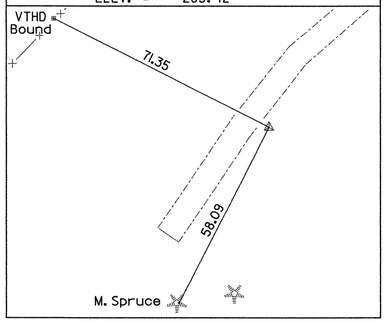

HVCTRL #8

NORTH = 20529.28
EAST = 264.30
ELEV. =

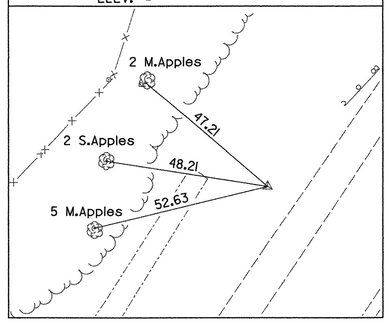

• Main Traverse completed 05/26/00 by L.Orvis P.C. & J.Hulett & G.Wilson

ALIGNMENT TIES

RAMP "C" POT STA. 39+75.00

NORTH = 19,343.65
EAST = 61,906.88

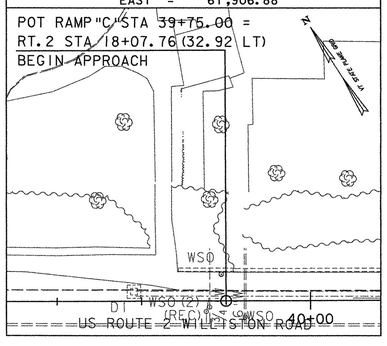

RAMP "C" POT STA. 41+12.50

NORTH = 19,270.44
EAST = 61,023.27

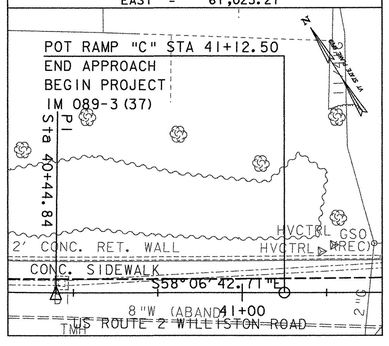

RAMP "C" PC STA. 41+40.07

NORTH = 19,255.88
EAST = 61,046.67

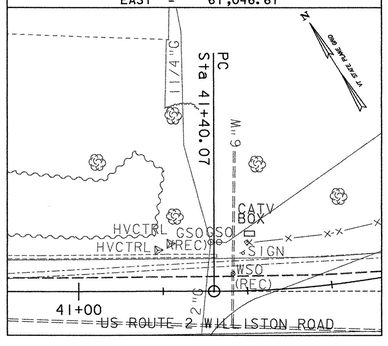

RAMP "C" PCC STA. 42+99.24

NORTH = 19,210.17
EAST = 61,197.25

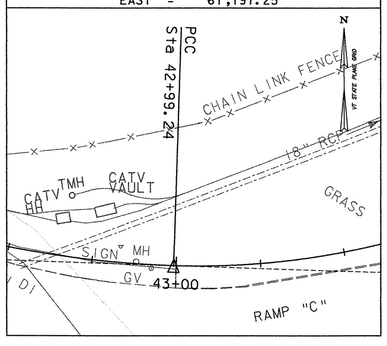

RAMP "C" PT STA. 44+71.74

NORTH = 19,268.20
EAST = 61,355.20

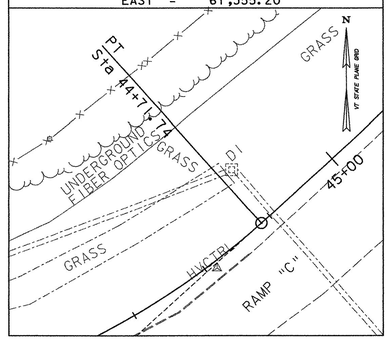

DATUM

VERTICAL NAVD 88
HORIZONTAL NAD 83 (96)
ADJUSTMENT Compass

PROJECT NAME: SOUTH BURLINGTON
PROJECT NUMBER: IM 089-3 (37)

FILE NAME: z03al78tie.dgn
PROJECT LEADER: KEN UPMAL
DESIGNED BY:
TIE SHEET 1OF 2

PLOT DATE: 5/5/2006
DRAWN BY: R. Bullock
CHECKED BY:
SHEET 11 OF 99

ALIGNMENT TIES

RAMP "C" PC STA. 46+44.61

NORTH = 19,384.40
EAST = 61,483.18

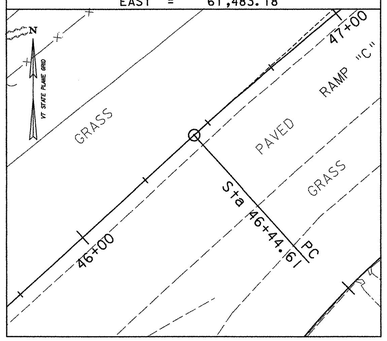

RAMP "C" PT STA. 48+66.45

NORTH = 19,514.67
EAST = 61,662.22

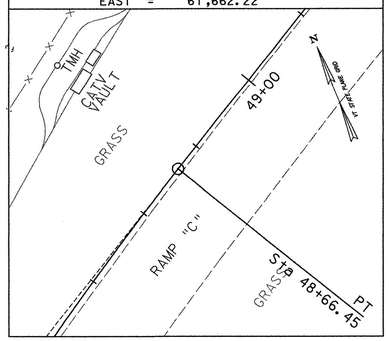

RAMP "C" PC STA. 52+61.09

NORTH = 19,711.07
EAST = 62,004.50

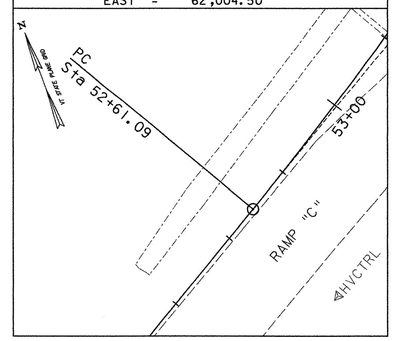

RAMP "C" PT STA. 56+73.17

NORTH = 19,982.78
EAST = 62,310.47

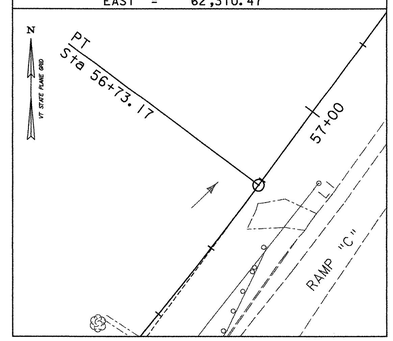

RAMP "C" POT STA. 62+62.50

NORTH = 20,455.69
EAST = 62,662.14

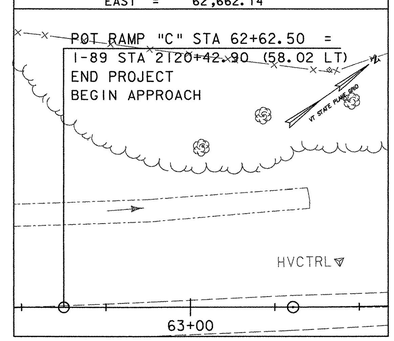

RAMP "C" PC STA. 63+30.41

NORTH = 20,510.18
EAST = 62,702.67

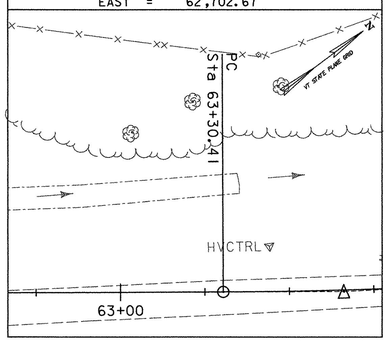

RAMP "C" POC STA. 64+00.00

NORTH = 20,566.96
EAST = 62,742.89

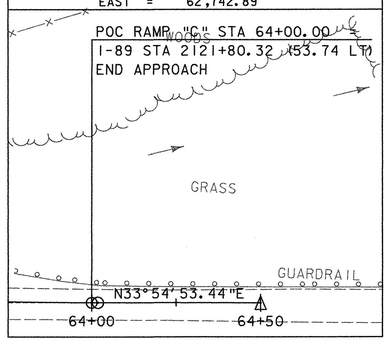

RAMP "D" POB STA. 70+69.38

NORTH = 18,914.48
EAST = 61,659.72

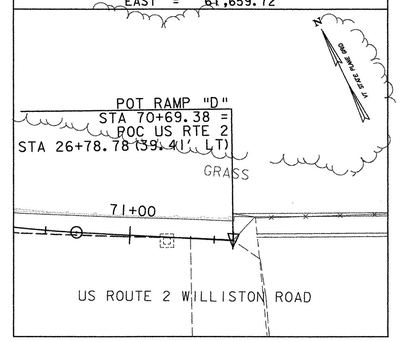

RAMP "D" POT STA. 70+82.00

NORTH = 18,920.64
EAST = 61,648.69

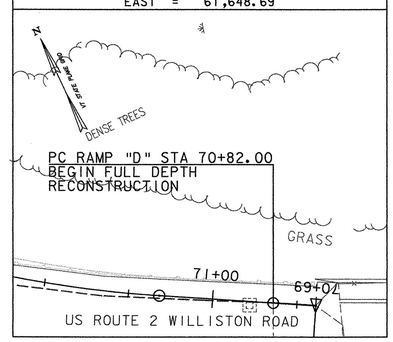

RAMP "D" PC STA. 71+15.83

NORTH = 18,937.12
EAST = 61,619.16

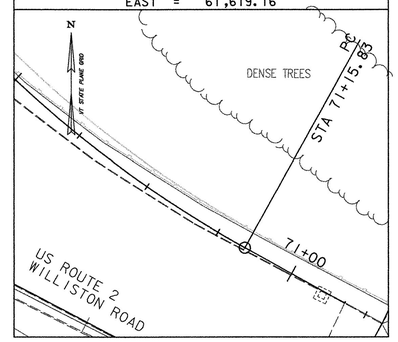

RAMP "D" PCC STA. 73+13.43

NORTH = 19,075.83
EAST = 61,482.12

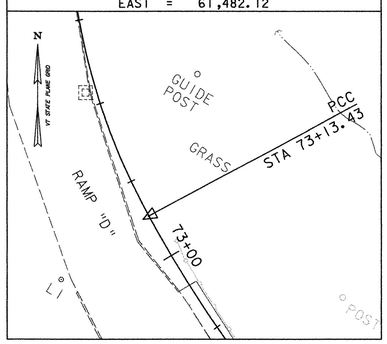

RAMP "D" POC STA. 74+00.00

NORTH = 19,158.37
EAST = 61,458.33

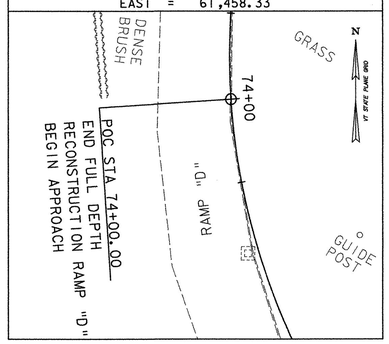

RAMP "D" PCC STA. 74+31.88

NORTH = 19,190.21
EAST = 61,458.82

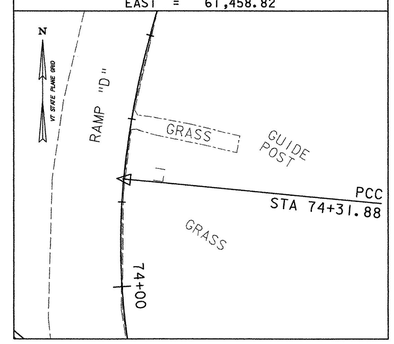

RAMP "D" POC STA. 75+00.00

NORTH = 19,256.25
EAST = 61,474.58

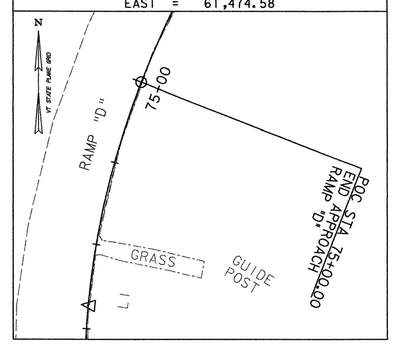

DATUM	
VERTICAL	NAVD 88
HORIZONTAL	NAD 83 (96)
ADJUSTMENT	Compass

PROJECT NAME: SOUTH BURLINGTON
PROJECT NUMBER: IM 089-3(37)

FILE NAME: z03al78tie.dgn
PROJECT LEADER: KEN UPMAL
DESIGNED BY:
TIE SHEET 2 OF 2

PLOT DATE: 5/5/2006
DRAWN BY: E. ATKINS
CHECKED BY:
SHEET 12 OF 99

GENERAL NOTES

1. THE EXISTING CONDITIONS BASE PLAN WAS DEVELOPED FROM TOPOGRAPHICAL ON-THE-GROUND SURVEY PERFORMED BY THE VERMONT AGENCY OF TRANSPORTATION ALONG THE ENTIRETY OF RAMP 'C', THE ENTIRETY OF RAMP 'D', AND ROUTE 2 FROM APPROX. STA. 15+09 TO APPROX. STA. 26+90. THE ON-THE-GROUND SURVEY WAS SUPPLEMENTED WITH AN ELECTRONIC DRAWING FILE CONTAINING AN AERIAL SURVEY PREPARED BY THE UNIVERSITY OF VERMONT WHERE TOPOGRAPHICAL ON-THE-GROUND SURVEY WAS NOT PERFORMED. TOPOGRAPHICAL FIELD CHECK SURVEY WAS PERFORMED BY GREEN INTERNATIONAL AFFILIATES, INC. ON 11/21/2005. THE LOCATIONS OF ALL TOPOGRAPHICAL FEATURES SHOWN ON THE EXISTING CONDITIONS BASE PLAN, EXCEPT WHERE SURVEYED BY THE VERMONT AGENCY OF TRANSPORTATION, SHOULD BE CONSIDERED APPROXIMATE.

2. UNDERGROUND UTILITIES SHOWN HEREIN WERE COMPILED FROM INFORMATION OF RECORD AND FIELD OBSERVATIONS. THE EXISTENCE OR LOCATION OF THE UTILITIES ARE NOT WARRANTED TO BE EXACT. THE CONTRACTOR SHALL FIELD VERIFY THE LOCATIONS OF A UTILITY AT THE DISCRETION OF THE ENGINEER. PAYMENT TO BE MADE UNDER TRENCH EXCAVATION OF EARTH. IF FIELD CONDITIONS ARE DIFFERENT THAN SHOWN ON THE PLANS, THE ENGINEER SHALL BE NOTIFIED.

3. THE CONTRACTOR IS RESPONSIBLE FOR PROTECTING ALL EXISTING UTILITIES THAT ARE TO REMAIN DURING CONSTRUCTION.

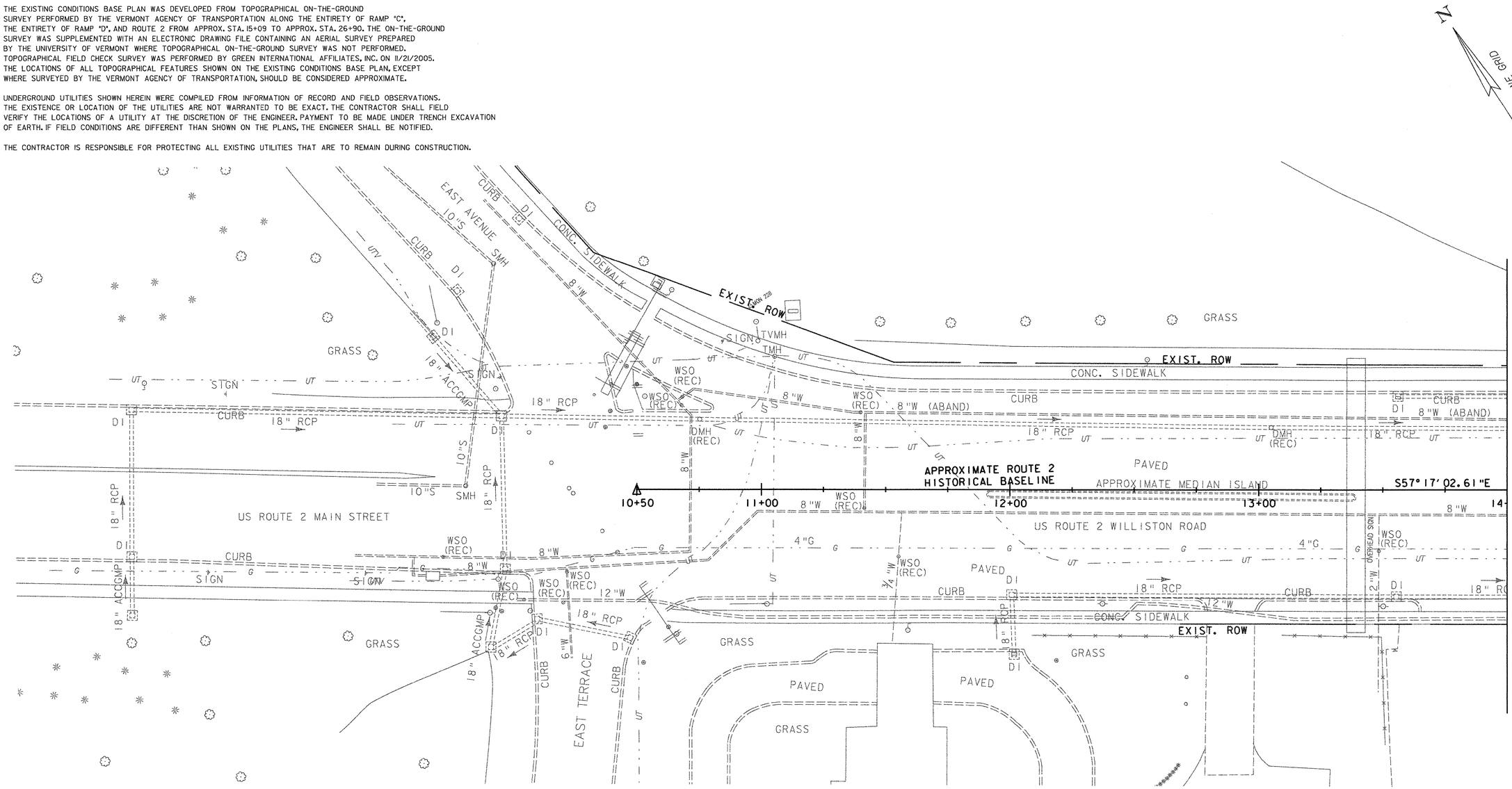

SIGNALS\LIGHTING
AS BUILTS

PULL BOXES - CONCRETE

0 20 40
SCALE IN FEET

ROADWAY LAYOUT SHEET 1

DATUM	
VERTICAL	NAVD 88
HORIZONTAL	NAD 83 (1996)

PROJECT NAME:	SOUTH BURLINGTON
PROJECT NUMBER:	IM 089-3(37)
FILE NAME: z03al78bdr.dgn	PLOT DATE: 5/5/2006
PROJECT LEADER: KEN UPMAL	DRAWN BY: P.MILEWSKI
DESIGNED BY: E.ATKINS/P.MILEWSKI	CHECKED BY: K.ISHIKURA
	SHEET 13 OF 99

REMOVE EXISTING SIDEWALK (COMMON EXCAVATION)
RAMP "C" 38+08 ~ 41+67 LT

COLD PLANING-BIT.PAVEMENT
US ROUTE 2 18+07.8 ~ 20+00

REMOVING AND RESETTING CURB
RAMP "C" EXISTING 40+25 ~ 41+67 LT RESET TO 40+25 ~ 41+67 LT

PORTLAND CEMENT CONCRETE SIDEWALK , 5 INCH (MOD.)
RAMP "C" 38+08 ~ 41+12.5 LT (MATCH EXIST. WIDTH)
RAMP "C" 41+12.5 ~ 41+67 LT (5' WIDE)

CONCRETE SIDEWALK RAMPS W/ DETECTABLE WARNING SURFACE
RAMP "C" 38+08 LT TYPE 6

ADJUST ELEVATION OF GATE VALVE
RAMP "C" 38+36 LT
RAMP "C" 38+90 LT
RAMP "C" 39+70 LT

EXISTING DRAINAGE
[1] RAMP "C" 39+44.2 LT ~ 40+46.6 LT
EXISTING PIPE & DI ~ RETAIN
[2] RAMP "C" 40+46.6 LT ~ RAMP "C" 42+14 LT
EXISTING PIPE ~ RETAIN

POT US ROUTE 2 STA. 15+75.00
BEGIN NEW PAVEMENT MARKINGS

POT RAMP "C" STA 39+75.00 =
RT. 2 STA 18+07.76 (32.92 LT)
BEGIN APPROACH

POT RAMP "C" STA 41+12.50
END APPROACH
BEGIN PROJECT
IM 089-3 (37)

CURVE DATA
Δ = 29° 59' 56.82"
D = 18° 50' 50.27"
R = 304.00'
T = 81.45'
L = 159.17'
E = 10.72'
TRANSITION TO EXISTING BANK

N
VT STATE PLANE GRID

MATCHLINE STA. 14+00 ROADWAY LAYOUT SHEET 1

MATCHLINE STA. 20+00 ROADWAY LAYOUT SHEET 3

POB Sta 37+00.00
PC STA 16+98.27
PI Sta 40+44.84
PC Sta 41+40.97
PI STA 18+49.94

NEW METER
2" POWER WIRED CONDUIT
JBX-1
2" POWER WIRED CONDUIT 145'
8" SLEEVE 64'
1/2" INTERCONNECT 6'
1/2" INTERCONNECT 182'
2" POWER WIRED CONDUIT 182'
EXISTING LIGHTPOLE TO JBX-3 (248') TO JBX'S OF 2" LIGHT POWER WIRED CONDUIT
1/2" INTERCONNECT 235'
2" POWER WIRED CONDUIT 156'
1/2" INTERCONNECT TO CONTROLLER
1/2" INTERCONNECT 70' TO CONTROLLER

JB1
JB2
JB3
JBX-1
JBX-2
JBX-3

S57° 33' 09.16"E
344.84'
S58° 06' 42.71"E
95.22'
S58° 06' 42.71"E
81.45'
12.35'
S57° 17' 02.61"E
S58° 48' 02.61"E

LIMITS OF COLD PLANE AND OVERLAY
US ROUTE 2 WILLISTON ROAD
APPROXIMATE ROUTE 2 HISTORICAL BASELINE
EXIST. ROW
PAVED
GRASS
GARDEN
SHOPPING PLAZA PARKING LOT
STAPLES DRIVE
CONTROLLER CABINET
SIDEWALK
CONC. SIDEWALK
CONC. CURB
CONC. WALL
GRANITE CURB
2' CONC. RET. WALL
UNDERGROUND FIBER OPTICS
SIGN
GUY
FLAG POLE
OBSV WELL
IRON PIN
CATV BOX
HVCTRL
TMH
SMH
MH
DI
WSO (REC)
GSO
18" RCP
30" RCP
8"W
8"W (ABAND)
8"S
10"S
4"G
2"G
12"W
37+00
38+00
39+00
40+00
41+00
15+00
16+00
17+00
18+00
19+00
20+00

JUNCTION BOXES (PLASTIC)
STA 36+79 LT (1EA) JBX-1
STA 38+25 LT (1EA) JBX-2
STA 38+25 LT (1EA) JB-1
STA 40+05 LT (1EA) JBX-3
STA 40+05 LT (1EA) JB-2
STA 41+52 LT (1EA) JB-3

SCALE IN FEET
0 20 40

NOTE:
TRAFFIC SIGNALS AND ASSOCIATED CONDUITS ARE SHOWN FOR REFERENCE ONLY.
REFER TO TRAFFIC SIGNAL SHEETS FOR TRAFFIC SIGNALS AND ASSOCIATED CONDUITS LAYOUT.

DATUM
VERTICAL NAVD 88
HORIZONTAL NAD 83 (1996)

ROADWAY LAYOUT SHEET 2

PROJECT NAME: SOUTH BURLINGTON
PROJECT NUMBER: IM 089-3(37)

FILE NAME: z03al78bdr.dgn
PROJECT LEADER: KEN UPMAL
DESIGNED BY: E.ATKINS/P.MILEWSKI
PLOT DATE: 5/5/2006
DRAWN BY: P.MILEWSKI
CHECKED BY: K.ISHIKURA
SHEET 14 OF 99

NEW DRAINAGE

1. RAMP "C" 42+14.0 LT ~ 42+56.2 LT — NEW 18" x 38' RCP/CPEP(SL) ~~W/DI@ 42+14.0 LT~~ ELIMINATED
2. RAMP "C" 42+51.7 RT ~ 42+56.2 LT — NEW 18" x 10' RCP
3. RAMP "C" 42+56.2 LT ~ 42+69.6 LT — NEW 18" x 10' RCP/CPEP(SL) W/MH @ 42+56.2 LT
4. RAMP "C" 42+69.6 LT ~ 44+76.8 LT — NEW 18" x 190' RCP/CPEP(SL) W/DI@ 42+69.6 LT
5. RAMP "C" 44+76.8 LT ~ 44+75.0 RT — NEW 18" x 82' RCP/CPEP(SL) W/DI@ 44+76.8 LT
6. US ROUTE 2 22+84.5 LT ~ 22+84.0 LT — NEW 18" x 52' RCP/CPEP(SL) W/DI@ 22+84.5 LT
7. RAMP "D" 72+63.5 LT ~ 72+53.5 LT — NEW 18" x 30' RCP/CPEP(SL) W/DI@ 72+63.5 LT
8. RAMP "D" 72+63.5 LT ~ 73+54.0 LT — NEW 18" x 88' RCP/CPEP(SL) W/DI@ 72+63.5 LT
9. RAMP "D" 73+54.0 LT ~ 74+01.0 LT — NEW 18" x 68' RCP/CPEP(SL) W/DI@ 73+54.0 LT
10. RAMP "D" 74+25.0 LT ~ 74+25.0 RT — NEW 24" x 60' RCP/CPEP(SL) W/MH @ 74+25.0 RT
11. RAMP "D" 74+25.0 RT ~ 74+51.4 RT — NEW 24" x 36' RCP/CPEP(SL) W/ RCPES/CPEPES @ 74+51.4 RT
12. RAMP "D" 74+25.0 RT~ 74+25.0 RT — NEW 12" x 16' CPEP(SL)

EXISTING DRAINAGE

2. RAMP "C" 40+46.6 LT ~ RAMP "C" 42+14 LT — EXISTING PIPE ~ RETAIN
3. RAMP "C" 42+14 LT ~ RAMP "C" 42+52JRT — EXISTING PIPE & DI~ REMOVE
4. US ROUTE 2 20+84 RT ~ RAMP "C" 42+52JRT — EXISTING PIPE ~ RETAIN DI~ REMOVE
5. RAMP "C" 42+52JRT ~ 44+75.9 LT — EXISTING PIPE & DI~ REMOVE
6. RAMP "C" 44+75.9 LT ~ 44+75 RT — EXISTING PIPE & DI~ REMOVE
7. US ROUTE 2 22+83.8 LT ~ 22+84 LT — EXISTING PIPE & DI~ REMOVE
8. US ROUTE 2 24+69.6 LT ~ RAMP "D" 72+63 LT — EXISTING PIPE & DI~ REMOVE
9. RAMP "D" 73+54.3 LT ~ 73+52 RT — EXISTING PIPE & DI~ REMOVE
10. RAMP "D" 74+53 LT ~ 74+54.3 RT — EXISTING PIPE ~ ABANDON PIPE; FILL WITH CONCRETE CLASS D (MOD.) ONLY REMOVE PORTION OF PIPE IN CONFLICT WITH PROPOSED WORK

JUNCTION BOXES (PLASTIC)

STA 42+32 LT (IEA) JBX-4
STA 42+32 RT (IEA) JB-4 (SEE SIGNAL DWG)
STA 42+40 LT (IEA) JBX-5
STA 44+75 LT (IEA) JB-5

MATCHLINE STA. 45+00 ROADWAY LAYOUT SHEET 6

MATCHLINE STA. 75+00 ROADWAY LAYOUT SHEET 6

MATCHLINE STA. 20+00 ROADWAY LAYOUT SHEET 2

MATCHLINE STA. 72+50 ROADWAY LAYOUT SHEET 4

MATCHLINE STA. 25+00 ROADWAY LAYOUT SHEET 4

1/2" CAMERA WIRED CONDUIT 155'

1/2" CAMERA WIRED CONDUIT

2" LIGHT POWER WIRED CONDUIT 240' TO JBX-3 TO LIGHTPOLE

2" POWER WIRED CONDUIT 235'

2" LIGHT POWER WIRED CONDUIT 307'

2" LIGHT POWER WIRED CONDUIT 34.5'

8" SLEEVE 28'

2" LIGHT POWER WIRED CONDUIT 52'

2" LIGHT POWER WIRED CONDUIT 44.5'

FILLED WITH FLOWABLE FILL

FLOWABLE FILL

FLOWABLE FILL

8" SLEEVE 50'

JBX-4 & JB-4 (SEE SIGNAL DWG)

JB5

JB4

JB3

JB2

JB1

PT Sta 44+71.74

PC STA 22+83.29

PT STA 20+10.60

PCC Sta 42+99.24

POC STA 75+00.00 END APPROACH RAMP "D"

PCC STA 74+31.88

PCC STA 73+13.43

POC STA 74+00.00 END FULL DEPTH RECONSTRUCTION BEGIN APPROACH RAMP "D"

Sta 43+90.02 PI

POT STA 21+05.10 BEGIN WIDENING US RTE 2

POC STA 24+83.30 END WIDENING US RTE 2

APPROXIMATE ROUTE 2 HISTORICAL BASELINE

LIMITS OF COLD PLANE AND OVERLAY

US ROUTE 2 WILLISTON ROAD

FLOWABLE FILL

WETLAND "68" (CLASS III WETLAND)

DENSE BRUSH

GUIDE POST

CURVE DATA
Δ = 44° 07' 30.65"
D = 25° 34' 42.50"
R = 224.00'
T = 90.79'
L = 172.51'
E = 17.10'
TRANSITION BANK = TO EXISTING

CURVE DATA
Δ = 29° 59' 56.82"
D = 18° 50' 50.27"
R = 304.00'
T = 81.45'
L = 159.17'
E = 10.72'
TRANSITION BANK = TO EXISTING

CURVE DATA
Δ = 33° 56' 05.26"
R = 200.00'
L = 118.46'
TRANSITION TO EXISTING BANK = 9.1'

N47° 45' 49.82" E 90.79'

S88° 06' 39.53" E 90.79'

N5° 27' 15.25" E 155.28'

N5° 27' 15.25" E 61.02'

N28° 28' 49.99" W 61.02'

S58° 06' 42.71" E 81.45'

S58° 48' 02.61" E

S59° 38' 34" E L=130.70'

R=1000.00' PC L=46.58'

S62° 18' 47" E L=172.47'

R=2.00' L=5.36'

R=2.00' L=5.16'

R=12.00'

R=15.00'

R=5.00'

30.00'

21.00'

13.00'

2.00'

REMOVE EXISTING SIDEWALK (COMMON EXCAVATION)

RAMP "C" 41+67 ~ 43+00 LT
US ROUTE 2 21+30 ~ 24+57 LT
RAMP "D" 72+50 ~ 72+90 LT

COLD PLANING-BIT.PAVEMENT

US ROUTE 2 20+00 ~ 25+00
RAMP "D" 74+50 ~ 75+00

CHANGING ELEV. OF DROP INLETS, CATCH BASINS OR MANHOLES

RAMP "C" 42+65 LT
RAMP "C" 42+88 LT

DATUM
VERTICAL NAVD 88
HORIZONTAL NAD 83 (1996)

8" UNDERDRAIN

1. RAMP "C" 44+00 LT ~ 44+76.8 LT — NEW 8" x 70' UNDERDRAIN W/F.B. @ 44+00 LT
2. RAMP "C" 44+76.8 LT ~ 47+00 LT — NEW 8" x 223' UNDERDRAIN

STONE FILL, TYPE I

RAMP "C" 44+00 ~ 44+50 LT
RAMP "C" 44+75 RT ~ 4' WIDE BY 12' LONG
US ROUTE 2 22+84 LT ~ 3' WIDE BY 8' LONG
RAMP "D" 73+99 LT ~ 4' WIDE BY 12' LONG
RAMP "D" 74+25 RT ~ 4' WIDE BY 12' LONG
RAMP "D" 74+30 RT ~ 74+80 RT
RAMP "D" 74+10 LT ~ 74+55 LT ~ 1610 S.F. (BOTTOM OF SED. POND)

STONE FILL, TYPE II

RAMP "D" 72+50 ~ 73+13 RT (SLOPE STABILIZATION)

REMOVING AND RESETTING CURB

RAMP "C" 41+67~44+00 RT RESET TO 41+67~43+04 LT, 43+14 ~ 44+00 LT
RAMP "C" 42+64~43+04 RT RESET TO 42+87~43+04 RT, 43+13~43+25 RT
US ROUTE 2 21+05~24+76 LT RESET TO 21+28~24+83 LT
RAMP "D" 72+50~75+00 LT RESET TO 72+50~72+82 RT, 72+93~74+35 RT
RAMP "D" 72+59~73+04 LT RESET TO 72+57~72+80 LT, 72+93~72+99 LT

REMOVAL OF EXISTING CURB

RAMP "C" 44+00 ~ 44+63 RT

PORTLAND CEMENT CONCRETE SIDEWALK, 5 INCH (MOD.)

RAMP "C" 41+67 ~ 43+14 LT (5' WIDE)
US ROUTE 2 21+43 ~ 24+58 LT (10' WIDE)
RAMP "D" 72+50 ~ 72+93 RT (5' WIDE)

CONCRETE SIDEWALK RAMPS W/ DETECTABLE WARNING SURFACE

RAMP "C" 43+09 LT TYPE 6
US ROUTE 2 21+48 LT TYPE 1
US ROUTE 2 24+56 LT TYPE 1
RAMP "D" 72+87.5 RT TYPE 6

REMOVING AND RESET GUARDRAIL (MOD. - 8' POSTS)

RAMP "D" EXISTING 72+50 - 5.5' RT ~ 73+04 - 4.1' RT RESET TO
RAMP "D" 72+50 - 5.7' RT ~ 73+04 - 6.5' RT

ADJUST ELEVATION OF VALVE BOX

RAMP "C" 42+93 RT

GRUBBING MATERIAL

RAMP "D" 72+50 ~ 73+13 RT

PULL BOX (MOD. - REMOVE EXISTING)

RAMP "D" 72+63 RT

PULL BOX - STANDARD

US ROUTE 2 21+39 - 43.5' LT
US ROUTE 2 24+55 - 50.1' LT
RAMP "C" 42+43 - 12.5' LT 43+12
RAMP "D" 72+64 - 4.0' RT

WIRED CONDUIT (2") (PVC)

RAMP "C" 42+37 LT (LP) ~ RAMP "C" 42+43 LT (PB) - 6'
RAMP "C" 42+43 LT (PB) ~ US ROUTE 2 21+39 LT (PB) - 70'
US ROUTE 2 21+39 LT (PB) ~ 24+55 LT (PB) - 314'
US ROUTE 2 24+20 LT (LP) ~ 24+55 LT (PB) - 37'
RAMP "D" 73+10 LT (LP) ~ US ROUTE 2 24+55 LT (PB)- 33'
US ROUTE 2 24+55 LT (PB) ~ RAMP "D" 72+64 RT (PB) - 45'
RAMP "D" 72+64 RT (PB) ~ RAMP "D" 72+10 RT (LP) - 54'

NOTE:
TRAFFIC SIGNALS AND ASSOCIATED CONDUITS ARE SHOWN FOR REFERENCE ONLY. REFER TO TRAFFIC SIGNAL SHEETS FOR TRAFFIC SIGNALS AND ASSOCIATED CONDUITS LAYOUT.

ELECTRICAL CONDUIT SLEEVE (8") (PVC)

RAMP "C" 42+43 LT (PB)~ US ROUTE 2 21+39 LT (PB) - 54' 50'
US ROUTE 2 24+55 LT (PB) ~ RAMP "D" 72+64 RT (PB) - 32' 28'

LIGHT POLE BASE (BREAKAWAY)

RAMP "C" 42+37 - 13.0' LT
US ROUTE 2 24+20 - 62.0' LT
RAMP "D" 73+10 - 32.0' LT

REMOVING AND RESETTING LIGHT POLE

RAMP "C" 42+37 RT TO 42+37 - 13.0' LT
US ROUTE 2 24+20 LT TO 24+20 - 62.0' LT
RAMP "D" 73+10 LT TO 73+10 - 32.0' LT

0 20 40
SCALE IN FEET

ROADWAY LAYOUT SHEET 3

PROJECT NAME:	SOUTH BURLINGTON
PROJECT NUMBER:	IM 089-3(37)
FILE NAME: z03al78bdr.dgn	PLOT DATE: 5/22/2006
PROJECT LEADER: KEN UPMAL	DRAWN BY: P.MILEWSKI
DESIGNED BY: E.ATKINS/P.MILEWSKI	CHECKED BY: K.ISHIKURA
	SHEET 15 OF 99

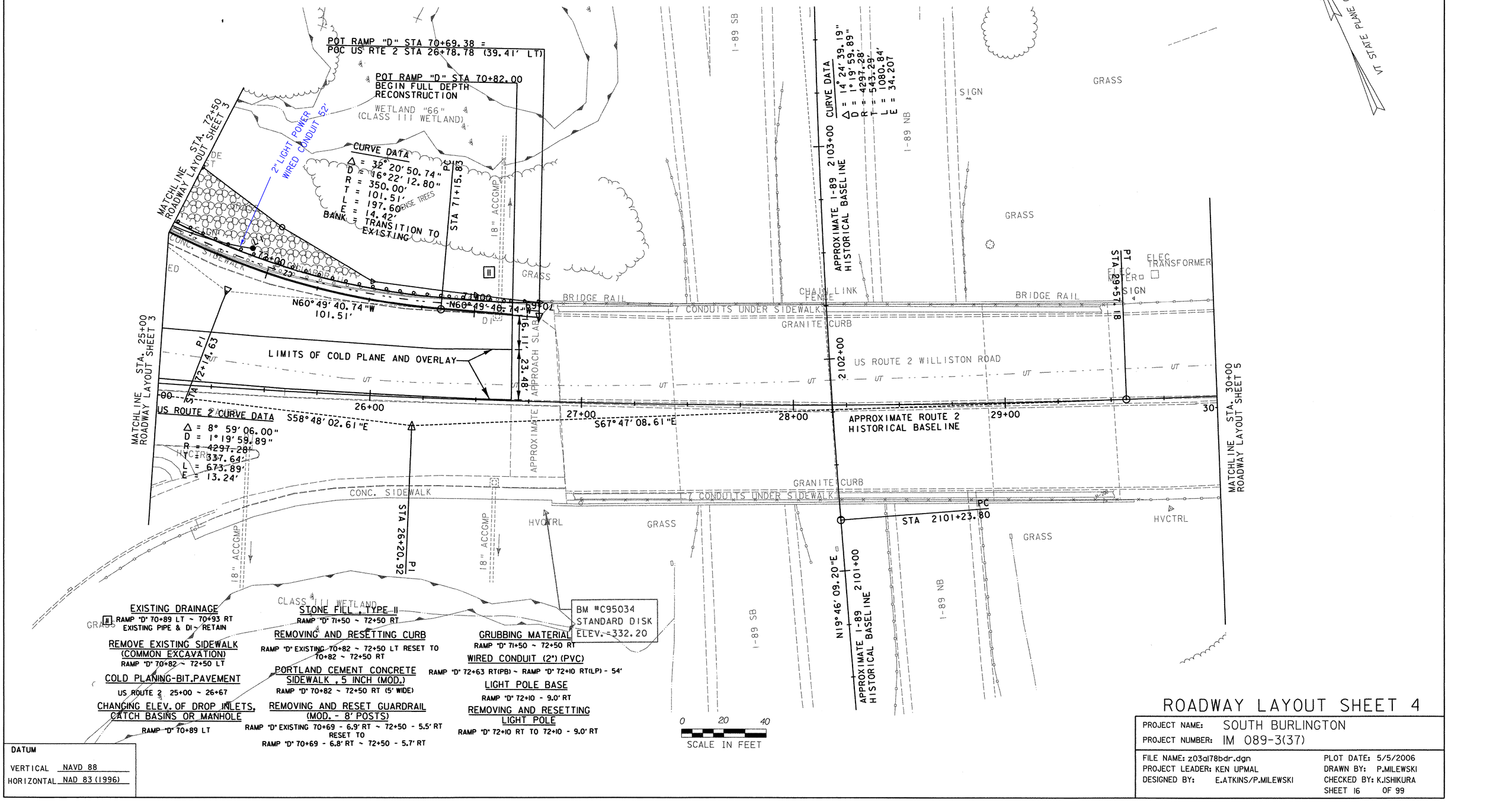

EXISTING DRAINAGE
RAMP "D" 70+89 LT ~ 70+93 RT
EXISTING PIPE & DI ~ RETAIN

REMOVE EXISTING SIDEWALK (COMMON EXCAVATION)
RAMP "D" 70+82 ~ 72+50 LT

COLD PLANING-BIT.PAVEMENT
US ROUTE 2 25+00 ~ 26+67

CHANGING ELEV. OF DROP INLETS, CATCH BASINS OR MANHOLE
RAMP "D" 70+89 LT

STONE FILL, TYPE II
RAMP "D" 71+50 ~ 72+50 RT

REMOVING AND RESETTING CURB
RAMP "D" EXISTING 70+82 ~ 72+50 LT RESET TO 70+82 ~ 72+50 RT

PORTLAND CEMENT CONCRETE SIDEWALK, 5 INCH (MOD.)
RAMP "D" 70+82 ~ 72+50 RT (5' WIDE)

REMOVING AND RESET GUARDRAIL (MOD. - 8' POSTS)
RAMP "D" EXISTING 70+69 - 6.9' RT ~ 72+50 - 5.5' RT RESET TO
RAMP "D" 70+69 - 6.8' RT ~ 72+50 - 5.7' RT

GRUBBING MATERIAL
RAMP "D" 71+50 ~ 72+50 RT

WIRED CONDUIT (2") (PVC)
RAMP "D" 72+63 RT(PB) ~ RAMP "D" 72+10 RT(LP) - 54'

LIGHT POLE BASE
RAMP "D" 72+10 - 9.0' RT

REMOVING AND RESETTING LIGHT POLE
RAMP "D" 72+10 RT TO 72+10 - 9.0' RT

DATUM
VERTICAL NAVD 88
HORIZONTAL NAD 83 (1996)

ROADWAY LAYOUT SHEET 4

PROJECT NAME: SOUTH BURLINGTON
PROJECT NUMBER: IM 089-3(37)

FILE NAME: z03al78bdr.dgn
PROJECT LEADER: KEN UPMAL
DESIGNED BY: E.ATKINS/P.MILEWSKI
PLOT DATE: 5/5/2006
DRAWN BY: P.MILEWSKI
CHECKED BY: K.ISHIKURA
SHEET 16 OF 99

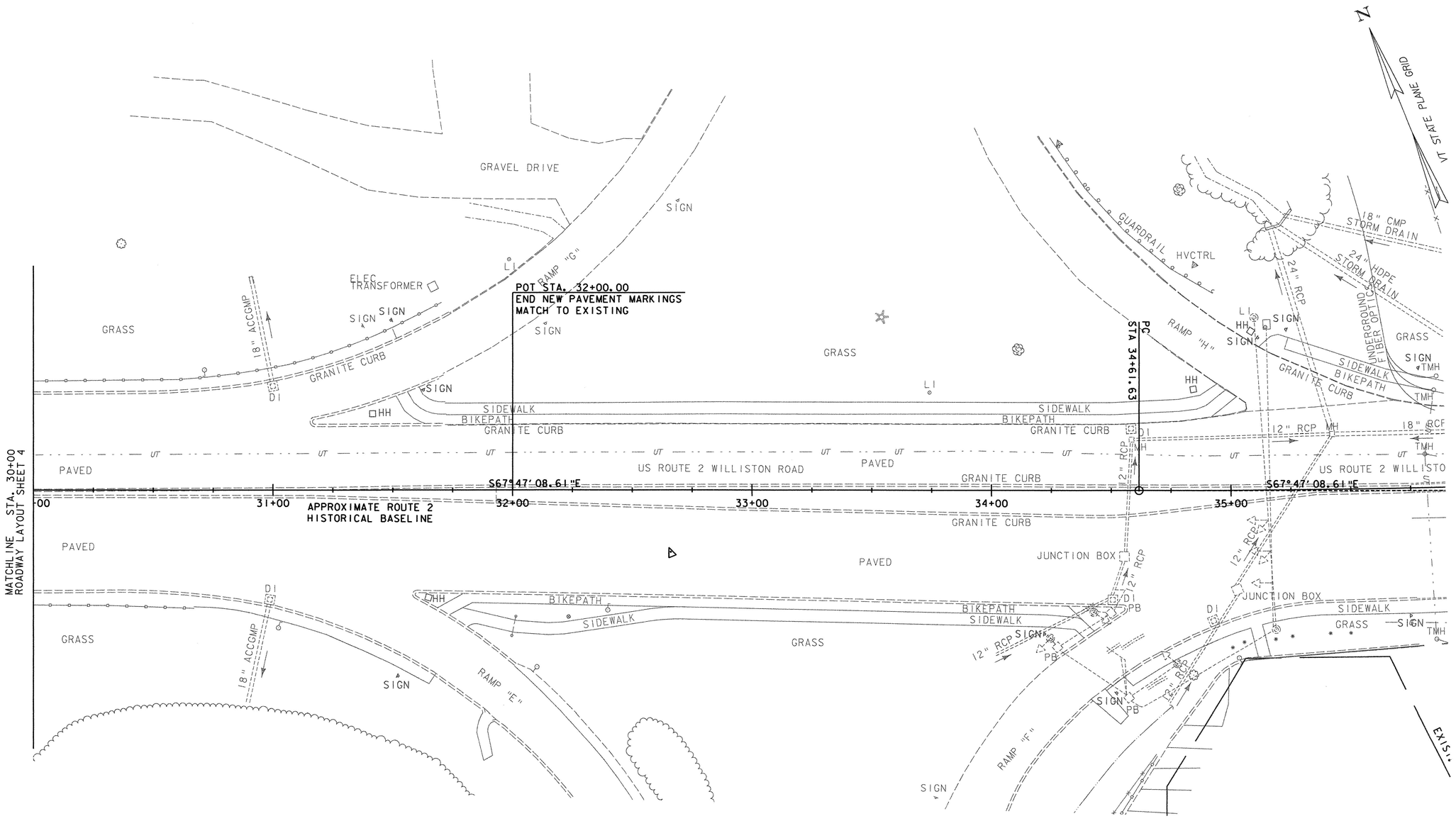

0 20 40
SCALE IN FEET

DATUM

VERTICAL NAVD 88
HORIZONTAL NAD 83 (1996)

ROADWAY LAYOUT SHEET 5

PROJECT NAME: SOUTH BURLINGTON
PROJECT NUMBER: IM 089-3(37)

FILE NAME: z03al78bdr.dgn
PROJECT LEADER: KEN UPMAL
DESIGNED BY: E.ATKINS/P.MILEWSKI
PLOT DATE: 5/5/2006
DRAWN BY: P.MILEWSKI
CHECKED BY: K.ISHIKURA
SHEET 17 OF 99

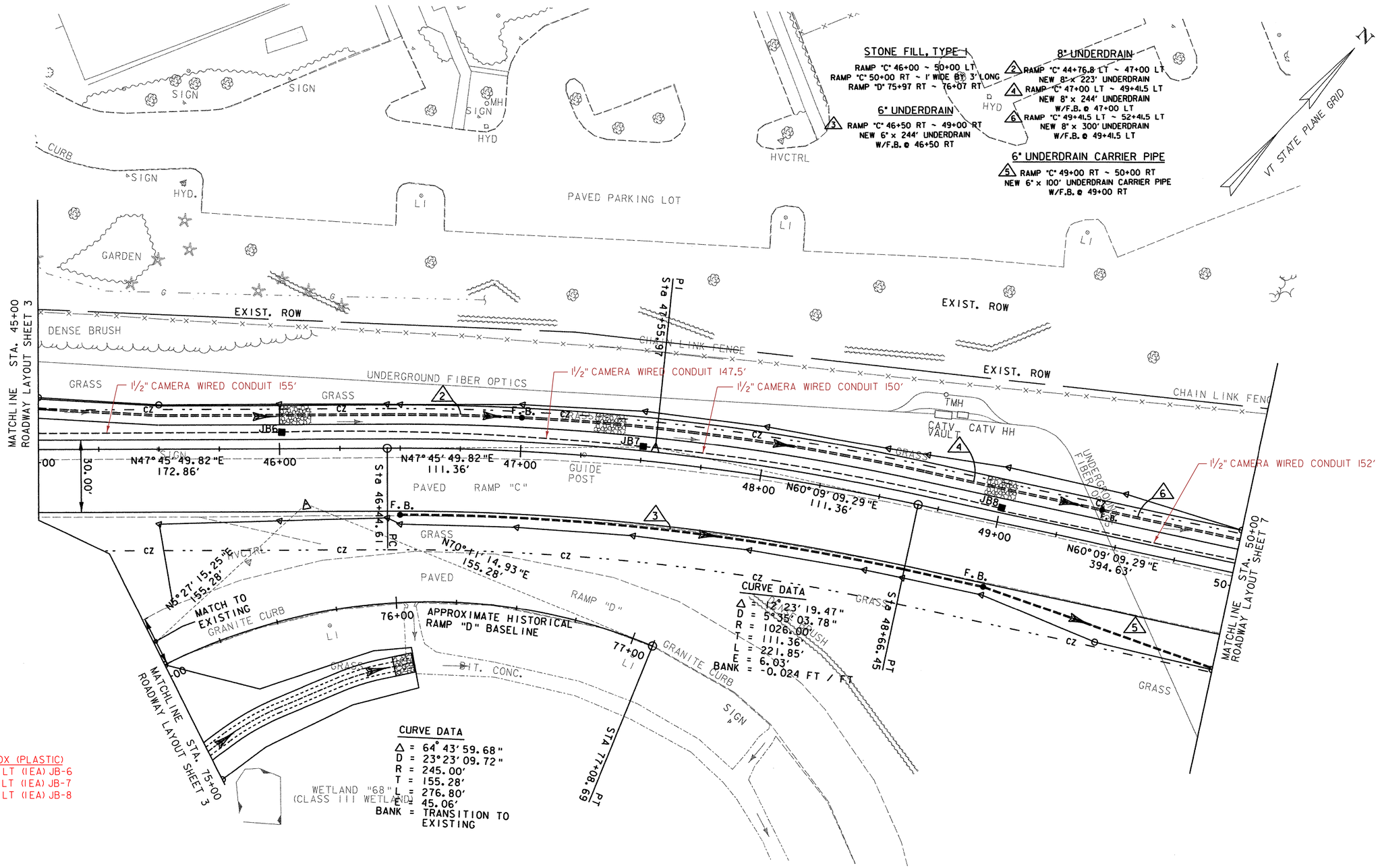

ROADWAY LAYOUT SHEET 6

NOTE:

TRAFFIC SIGNALS AND ASSOCIATED CONDUITS ARE SHOWN FOR REFERENCE ONLY.
REFER TO TRAFFIC SIGNAL SHEETS FOR TRAFFIC SIGNALS AND ASSOCIATED CONDUITS LAYOUT.

DATUM

VERTICAL NAVD 88
HORIZONTAL NAD 83 (1996)

PROJECT NAME: SOUTH BURLINGTON
PROJECT NUMBER: IM 089-3(37)

FILE NAME: z03al78bdr.dgn
PROJECT LEADER: KEN UPMAL
DESIGNED BY: E.ATKINS/P.MILEWSKI
PLOT DATE: 5/5/2006
DRAWN BY: P.MILEWSKI
CHECKED BY: K.ISHIKURA
SHEET 18 OF 99

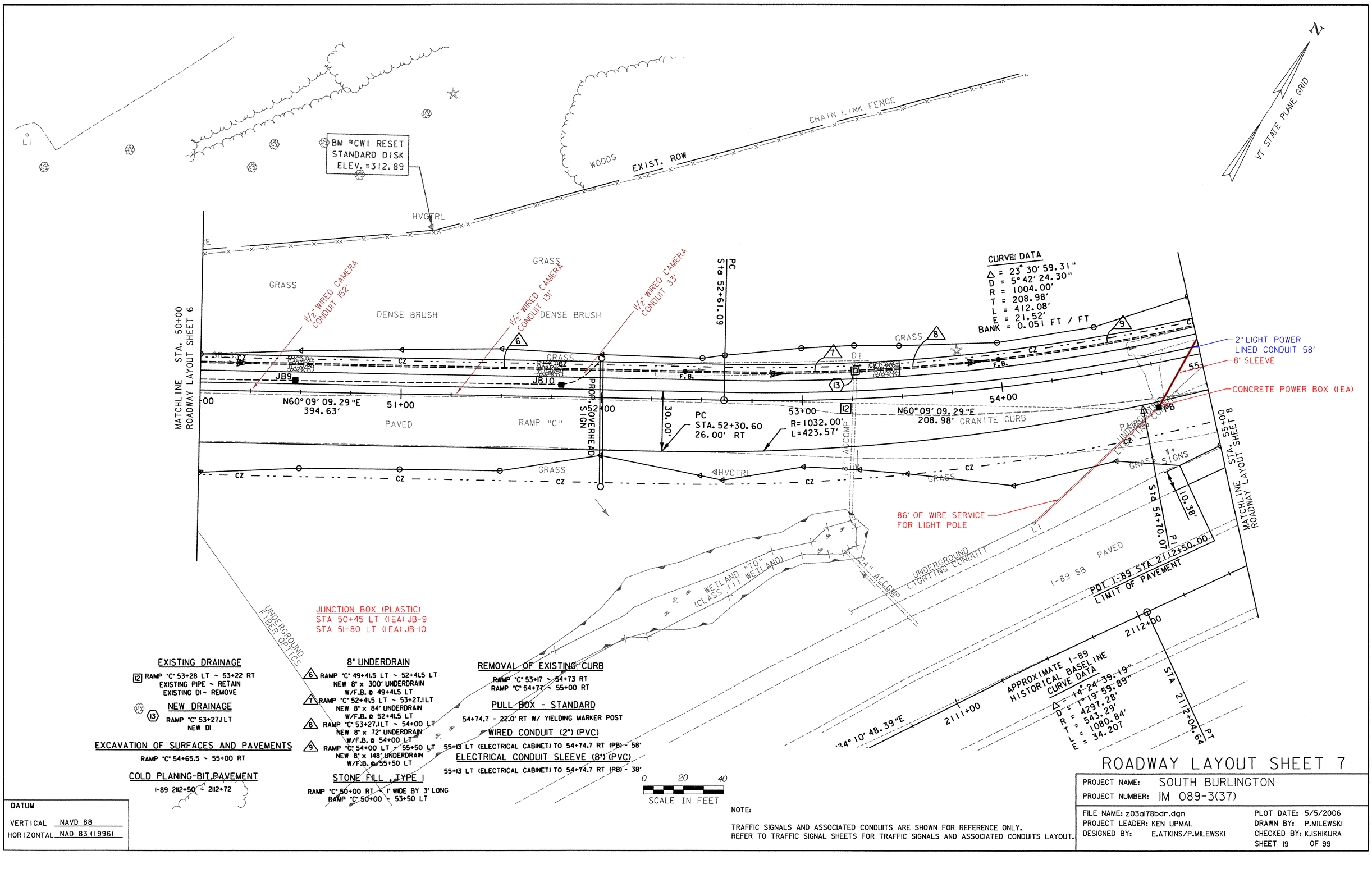

NOTE:

TRAFFIC SIGNALS AND ASSOCIATED CONDUITS ARE SHOWN FOR REFERENCE ONLY.
REFER TO TRAFFIC SIGNAL SHEETS FOR TRAFFIC SIGNALS AND ASSOCIATED CONDUITS LAYOUT.

DATUM

VERTICAL NAVD 88
HORIZONTAL NAD 83 (1996)

ROADWAY LAYOUT SHEET 7

PROJECT NAME: SOUTH BURLINGTON
PROJECT NUMBER: IM 089-3(37)

FILE NAME: z03al78bdr.dgn
PROJECT LEADER: KEN UPMAL
DESIGNED BY: E.ATKINS/P.MILEWSKI
PLOT DATE: 5/5/2006
DRAWN BY: P.MILEWSKI
CHECKED BY: K.ISHIKURA
SHEET 19 OF 99

EXISTING DRAINAGE

13 RAMP "C" 56+14.1 LT ~ 56+18.1 RT
EXISTING PIPE ~ REMOVE

14 RAMP "C" 56+18.1 RT ~ I-89 2113+99 RT
EXISTING PIPE ~ RETAIN

NEW DRAINAGE

14 RAMP "C" 56+14.1 LT ~ 56+18.1 RT
NEW 18" x 32' RCP/CPEP(SL)
W/DI@ 56+14.1 LT & DI@ 56+18.1 RT
CAST NEW DI@ 56+18.1 RT ONTO EXIST. PIPE

EXCAVATION OF SURFACES AND PAVEMENTS

RAMP "C" 55+00 ~ 56+50 RT

COLD PLANING-BIT.PAVEMENT

I-89 2112+72 ~ 2114+74

8" UNDERDRAIN

9 RAMP "C" 54+00 LT ~ 55+50 LT
NEW 8" x 148' UNDERDRAIN
W/F.B. @ 55+50 LT

10 RAMP "C" 55+50 LT ~ 56+14.1 LT
NEW 8" x 62' UNDERDRAIN

11 RAMP "C" 56+14.1 LT ~ 58+00 LT
NEW 8" x 186' UNDERDRAIN
W/F.B. @ 58+00 LT

12 RAMP "C" 58+00 LT ~ 59+54 LT
NEW 8" x 154' UNDERDRAIN
W/F.B. @ 59+54 LT

8" UNDERDRAIN CARRIER PIPE

RAMP "C" 59+54 LT ~ 60+51 LT

13 NEW 8" x 98' UNDERDRAIN CARRIER PIPE

IRON PIN

STONE FILL , TYPE I

RAMP "C" 59+50 ~ 60+00 LT

REMOVAL OF EXISTING CURB

RAMP "C" 55+00 ~ 56+68 RT

STEEL BEAM GUARD RAIL

I-89 2114+64.7 LT ~ 2115+39.2 LT (75')

MANUFACTURED TERMINAL SECTION

I-89 2115+39.2 LT - 1EACH (37.5')

TRAILING END TERMINAL

I-89 2114+27.1 LT - 1EACH (37.5')

REMOVAL AND DISPOSAL OF EXISTING GUARDRAIL

RAMP "C" 55+26 ~ 56+60 RT
I-89 2113+04 ~ 2114+22 LT

PULL BOX - DOUBLE
(MOD. - RELOCATE ELECTRICAL CABINET)

55+16 RT TO 55+13 LT

WIRED CONDUIT (2") (PVC)

55+13 LT (ELECTRICAL CABINET) TO 54+74.3 RT (PB) - 58'
55+13 LT (ELECTRICAL CABINET) TO 55+36 LT (LP) - 26'
55+36 LT (LP) TO 56+75 LT (LP) - 140'

ELECTRICAL CONDUIT SLEEVE (8") (PVC)

55+13 LT (ELECTRICAL CABINET) TO 54+74.3 RT (PB) - 38'

LIGHT POLE BASE (BREAKAWAY)

55+36 - 9.0' LT
56+75 - 9.0' LT

REMOVE & RESETTING LIGHT POLE

55+35.7 RT TO 55+36 - 9.0' LT
56+83.5 RT TO 56+75 - 9.0' LT

CURVE DATA

Δ = 23° 30' 59.31"
D = 5° 42' 24.30"
R = 1004.00'
T = 208.98'
L = 412.08'
E = 21.52'
BANK = 0.051 FT / FT

EXIST. ROW

HVCTRL

VT STATE PLANE GRID

BM
RR SPIKE SET IN
ROOT OF M. SPRUCE
ELEV. =283.65

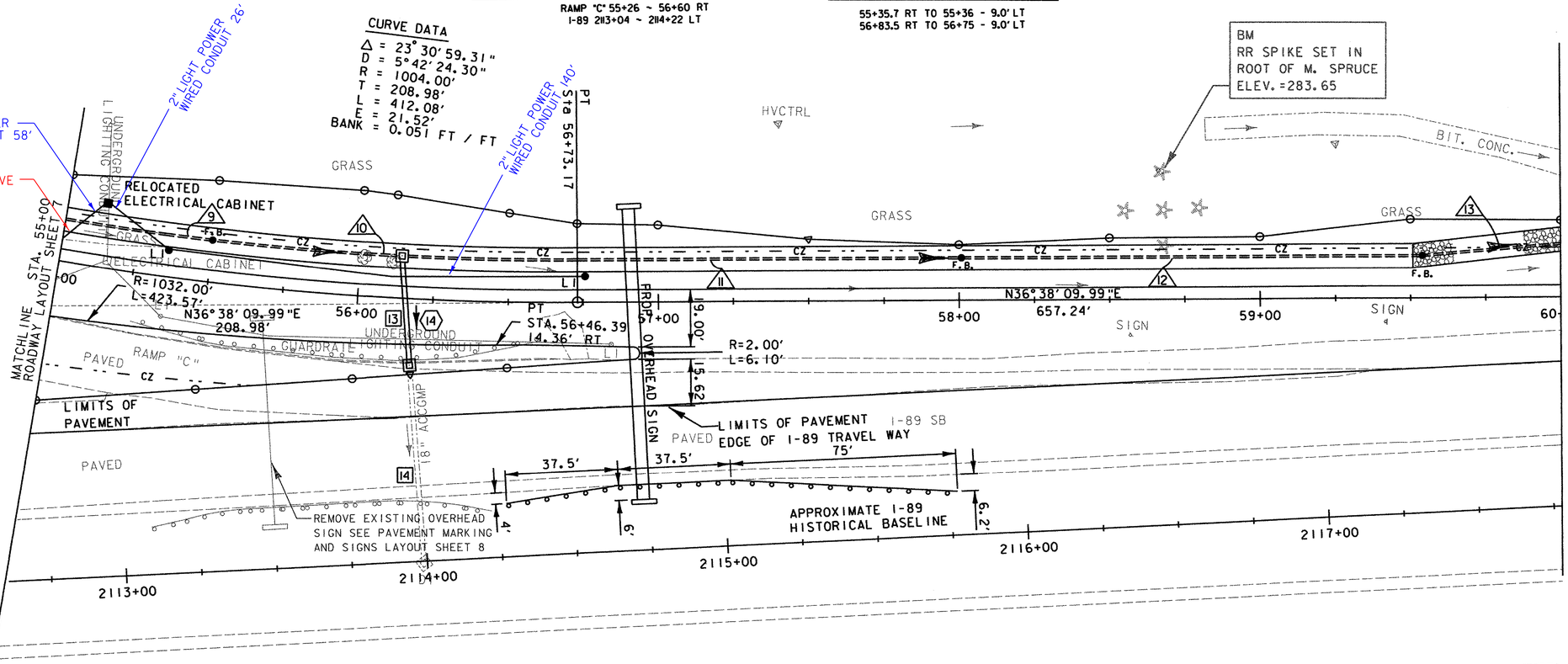

0 20 40
SCALE IN FEET

DATUM

VERTICAL NAVD 88
HORIZONTAL NAD 83 (1996)

ROADWAY LAYOUT SHEET 8

PROJECT NAME: SOUTH BURLINGTON
PROJECT NUMBER: IM 089-3(37)

FILE NAME: z03al78bdr.dgn
PROJECT LEADER: KEN UPMAL
DESIGNED BY: E.ATKINS/P.MILEWSKI

PLOT DATE: 5/5/2006
DRAWN BY: P.MILEWSKI
CHECKED BY: K.ISHIKURA
SHEET 20 OF 99

COLD PLANING-BIT.PAVEMENT

RAMP "C" 63+50 ~ 64+00

8" UNDERDRAIN CARRIER PIPE

RAMP "C" 59+56 LT ~ 60+51LT

13 NEW 8" x 98' UNDERDRAIN CARRIER PIPE W/F.B. @ 59+56 LT

STONE FILL, TYPE I

RAMP "C" 60+51LT ~ 1' WIDE BY 3' LONG

CHAIN LINK FENCE

EXIST. ROW

CHAIN LINK FENCE

POT RAMP "C" STA 62+62.50 =
I-89 STA 2120+42.90 (58.02 LT)
END PROJECT
BEGIN APPROACH

BM #8
RR SPIKE SET IN
ROOT OF M. MAPLE
ELEV. =257.97

EXIST. ROW

POC RAMP "C" STA 64+00.00 =
I-89 STA 2121+80.32 (53.74 LT)
END APPROACH

WOODS

GRASS

HVCTRL

GRASS

EXTENDED 8" (C) PIPE

13

GRASS SWALE

CZ CZ CZ

PC Sta 63+30.41

CURVE DATA
Δ = 2° 43' 16.55"
D = 3° 48' 34.42"
R = 1504.00'
T = 35.72'
L = 71.43'
E = 0.42'

PT Sta 64+01.84

POE Sta 64+50.00

BANK = MATCH EXISTNG

HVCTRL

9.08'

GUARDRAIL

GRASS

N36° 38' 09.99"E
657.24'

N36° 38' 09.99"E
35.72'

N33° 54' 53.44"E
35.72'

N33° 54' 53.44"E
48.16'

61+00 62+00 63+00 64+00 64+50

PAVED

I-89 SB

MATCHLINE STA. 60+00
ROADWAY LAYOUT SHEET 8

LIMITS OF PAVEMENT
EDGE OF I-89 TRAVEL WAY

SIGN

APPROXIMATE I-89
HISTORICAL BASELINE

N34° 10' 48.39"E
1500.000'

PI Sta 63+66.13

2118+00 2119+00 2120+00 2121+00 2122+00 2123+00

VT STATE PLANE GRID

0 20 40
SCALE IN FEET

DATUM

VERTICAL NAVD 88
HORIZONTAL NAD 83 (1996)

ROADWAY LAYOUT SHEET 9

PROJECT NAME: SOUTH BURLINGTON
PROJECT NUMBER: IM 089-3(37)

FILE NAME: z03al78bdr.dgn
PROJECT LEADER: KEN UPMAL
DESIGNED BY: E.ATKINS/P.MILEWSKI

PLOT DATE: 5/5/2006
DRAWN BY: P.MILEWSKI
CHECKED BY: K.ISHIKURA
SHEET 21 OF 99

TYPICAL DRAINAGE DETAILS

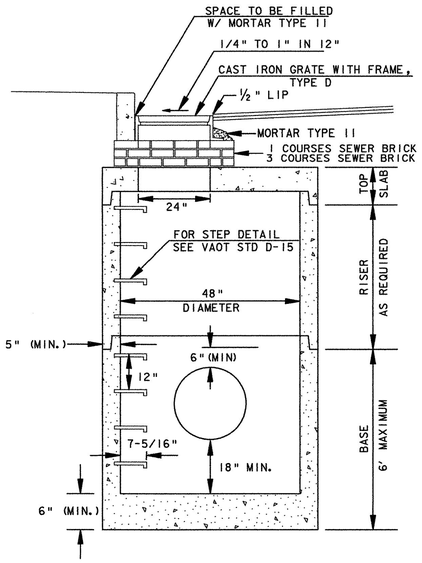

ELEVATION VIEW

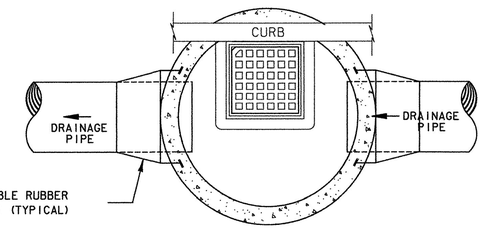

DROP INLET PLAN VIEW

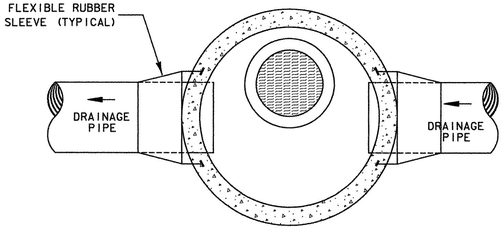

MANHOLE PLAN VIEW

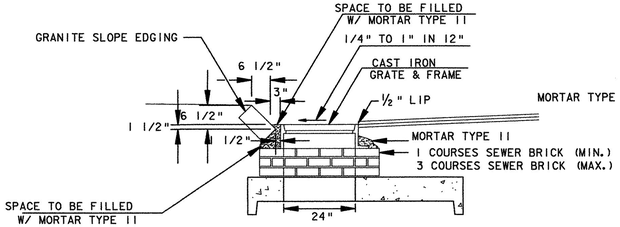

TYPICAL ELEVATION OF GRATE INSTALLATION WITH GRANITE SLOPE EDGING

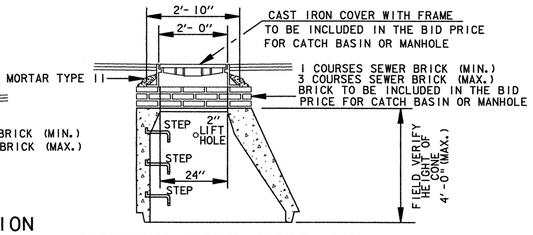

MANHOLE CONE SECTION

TYPICAL PRECAST DROP INLET OR MANHOLE INSTALLED IN ROADWAY

SCALE: NOT TO SCALE

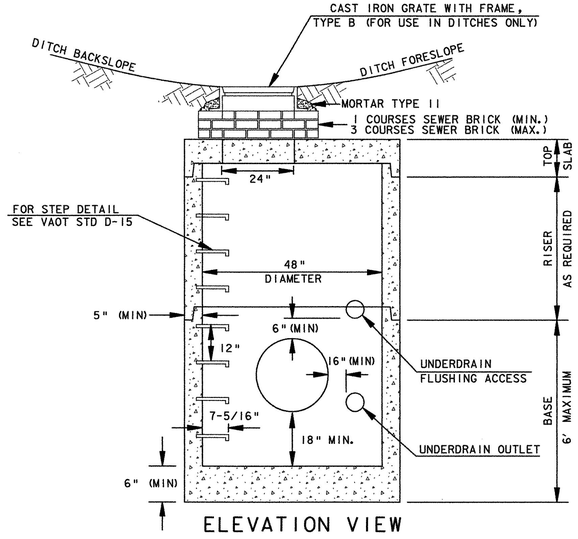

ELEVATION VIEW

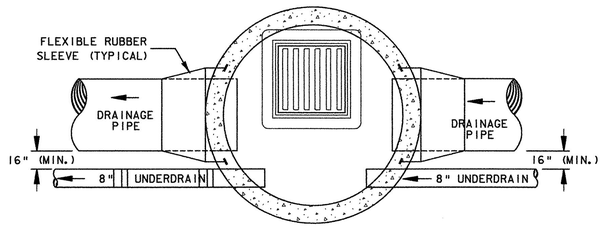

PLAN VIEW

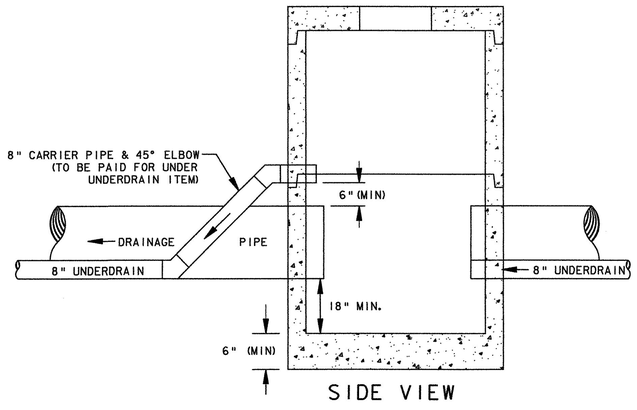

SIDE VIEW

TYPICAL PRECAST DI INSTALLED IN DITCH W/ UNDERDRAIN FLUSHING ACCESS

SCALE: NOT TO SCALE

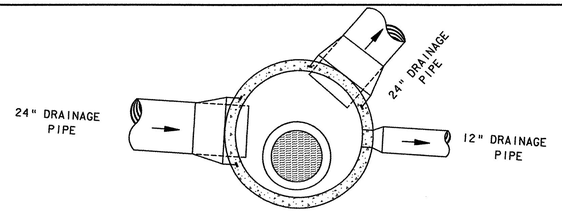

MANHOLE PLAN VIEW

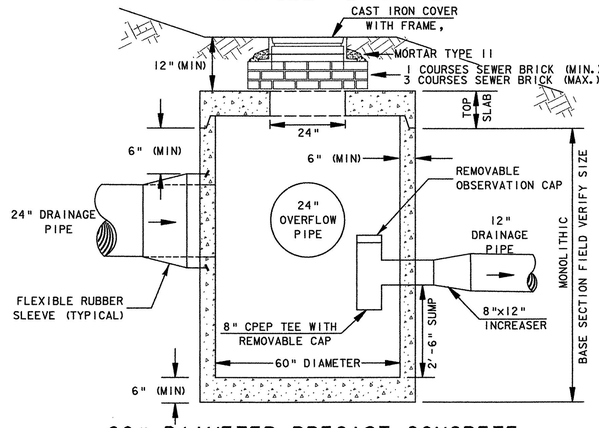

60" DIAMETER PRECAST CONCRETE DIVERSION MANHOLE AT RAMP "D" STA. 74+25.00RT

SCALE: NOT TO SCALE

PRECAST CONCRETE DIVERSION MANHOLE NOTES:

1) PRECAST CONCRETE SECTIONS SHALL CONFORM TO THE STANDARD SPECIFICATIONS AND ASTM C-478.
2) MINIMUM CONCRETE COMPRESSIVE STRENGTH: 4,000 PSI AT 28-DAYS
3) STEEL REINFORCING SHALL CONFORM TO ASTM A185 OR A82 FOR HS25 LOADING.
4) PROVIDE MANHOLE STEPS. STEPS SHALL BE 14" WIDE STEEL REINFORCED COPOLYMER POLYPROPYLENE PLASTIC CONFORMING TO ASTM C-478 AND SHALL BE CAST INTO MANHOLE SECTIONS BY THE PRECAST CONCRETE MANUFACTURER.
5) FACE OF PIPE SHALL NOT PROJECT MORE THAN 2" OR LESS THAN 1" FROM INSIDE WALL OF STRUCTURE.
6) THERE SHALL BE NO HOLES CLOSER THAN 3" TO JOINTS.
7) FITTING FRAME TO FINAL GRADE MAY BE DONE WITH BRICK OR PRECAST CONCRETE GRADE RINGS OF APPROPRIATE THICKNESS (3 COURSES MAX).
8) FLAT SLAB TOPS SHALL BE USED.
9) ALL PIPE INVERTS AND PENETRATION ANGLES SHALL BE FIELD VERIFIED PRIOR TO PRECASTING.
10) PRECAST SECTIONS SHALL HAVE A TONGUE AND GROOVE JOINT AND BE ASSEMBLED USING A BUTYL RUBBER OR APPROVED EQUAL SEALANT.
11) PROVIDE FLEXIBLE RUBBER SLEEVES CONFORMING TO ASTM C-923, RESILIENT, OF SIZE REQUIRED, FOR EACH PIPE CONNECTING TO STRUCTURE. SLEEVES SHALL BE CAST INTO PRECAST STRUCTURE BY THE MANUFACTURER FOR ALL PIPE PENETRATIONS.
12) PAYMENT FOR INSTALLATION OF THE DIVERSON MANHOLE SHALL BE MADE UNDER THE PRECAST REINFORCED CONCRETE MANHOLE WITH CAST IRON GRATE (MOD. - DIVERSION MANHOLE) ITEM (604.21).

PRECAST CONCRETE DROP INLET AND MANHOLE NOTES:

1) PRECAST CONCRETE SECTIONS SHALL CONFORM TO THE STANDARD SPECIFICATIONS AND ASTM C-478.
2) MINIMUM CONCRETE COMPRESSIVE STRENGTH: 4,000 PSI AT 28-DAYS
3) STEEL REINFORCING SHALL CONFORM TO ASTM A185 OR A82 FOR HS25 LOADING.
4) MANHOLE STEPS SHALL BE 14" WIDE STEEL REINFORCED COPOLYMER POLYPROPYLENE PLASTIC CONFORMING TO ASTM C-478 AND SHALL BE CAST INTO MANHOLE SECTIONS BY THE PRECAST CONCRETE MANUFACTURER.
5) FACE OF PIPE SHALL NOT PROJECT MORE THAN 2" OR LESS THAN 1" FROM INSIDE WALL OF STRUCTURE.
6) ALL STRUCTURES WITH MULTIPLE PIPES SHALL HAVE A MINIMUM OF 12" OF OUTSIDE SURFACE BETWEEN HOLES, NO MORE THAN 75% OF A HORIZONTAL CROSS-SECTION SHALL BE HOLES, AND THERE SHALL BE NO HOLES CLOSER THAN 3" TO JOINTS.
7) FITTING FRAME TO FINAL GRADE MAY BE DONE WITH BRICK OR PRECAST CONCRETE GRADE RINGS OF APPROPRIATE THICKNESS (3 COURSES MAX).
8) THE MANHOLE AT RAMP "C" STA. 42+56.2 SHALL BE AN ECCENTRIC CONE TOP SECTION. FLAT SLAB TOPS SHALL BE USED FOR ALL DROP INLETS AND THE DIVERSION MANHOLE AT RAMP "D" STA. 74+25 RT. UNLESS OTHERWISE PERMITTED BY THE ENGINEER.
9) ALL PIPE INVERTS AND PENETRATION ANGLES SHALL BE FIELD VERIFIED PRIOR TO PRECASTING.
10) PRECAST SECTIONS SHALL HAVE A TONGUE AND GROOVE JOINT AND BE ASSEMBLED USING A BUTYL RUBBER OR APPROVED EQUAL SEALANT.
11) PROVIDE FLEXIBLE RUBBER SLEEVES CONFORMING TO ASTM C-923, RESILIENT, OF SIZE REQUIRED, FOR EACH PIPE CONNECTING TO STRUCTURE. SLEEVES SHALL BE CAST INTO PRECAST STRUCTURE BY THE MANUFACTURER FOR ALL PIPE PENETRATIONS.
12) DROP INLET GRATE ORIENTATION SHALL BE IN ACCORDANCE WITH STANDARD DETAIL D-15 FOR TYPE D AND D-16 FOR TYPE B GRATES.
13) INSTALLATION OF DROP INLETS OVER EXISTING PIPES SHALL INCLUDE CLEAN CUTTING OF EXISTING PIPES, PROVIDING AN EXTENSION PIPE OF SIMILAR MATERIAL AND SIZE AS THE EXISTING PIPE, COUPLINGS REQUIRED FOR THE CONNECTION BETWEEN THE EXTENSION PIPE AND THE EXISTING PIPE, AND INSTALLING FLEXIBLE RUBBER SLEEVES AS SHOWN IN DETAILS PROVIDED ON THIS SHEET.
14) PAYMENT FOR INSTALLATION OF THE DROP INLETS SHALL BE MADE UNDER THE PRECAST REINFORCED CONC. CATCH BASIN WITH CAST IRON GRATE ITEM (604.20).
15) PAYMENT FOR INSTALLATION OF THE MANHOLE AT RAMP "C" STA. 42+56.2 SHALL BE MADE UNDER THE PRECAST REINFORCED CONCRETE MANHOLE WITH CAST IRON GRATE ITEM (604.21).

PROJECT NAME: SOUTH BURLINGTON
PROJECT NUMBER: IM 089-3(37)

FILE NAME: z03al78typ.dgn
PROJECT LEADER: KEN UPMAL
DESIGNED BY: E.ATKINS/P. MILEWSKI
PLOT DATE: 5/5/2006
DRAWN BY: E.ATKINS
CHECKED BY: K.ISHIKURA
SHEET 22 OF 99

STORMWATER TREATMENT DETAILS

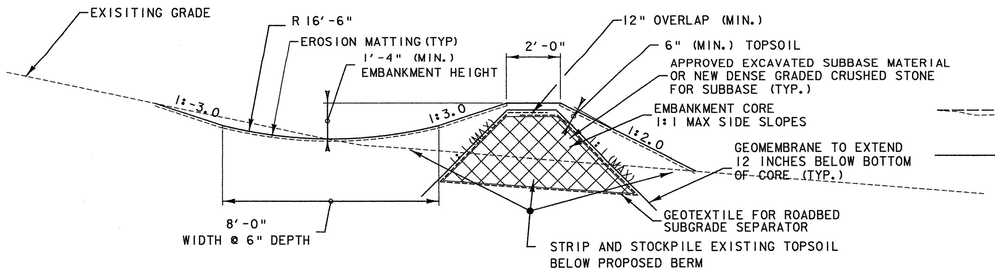

TYPICAL GRASS CHANNEL
RAMP "D" STA. 74+78+/- ~ 76+06+/- RT

NOT TO SCALE

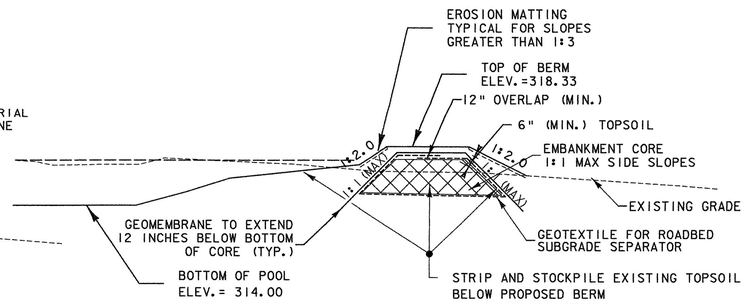

TYPICAL POOL EMBANKMENT DETAIL
RAMP "D" STA. 73+75+/- ~ 74+50+/- RT

NOT TO SCALE

EMBANKMENT NOTES:

1) IN AREAS WHERE THE CHANNEL BERM REQUIRES A RAISE IN GRADE GREATER THAN 6" EXISTING TOPSOIL, TOPSOIL FILLS, ORGANIC SOILS AND BOULDERS SHALL BE REMOVED AND TOPSOIL SHALL BE STOCKPILED FOR REUSE.
2) THE CONTRACTOR SHALL PROOF ROLL EXPOSED SUBGRADES WITH A VIBRATORY ROLLER TO IDENTIFY SOFT SPOTS. ANY SOFT SPOTS SHALL BE EXCAVATED AND BACKFILLED WITH SUITABLE MATERIAL.
3) THE CORE OF THE BERM SHALL BE CONSTRUCTED WITH APPROVED EXCAVATED SUBBASE MATERIAL FROM THE EXISTING ROADWAYS OR WITH NEW DENSE GRADED CRUSHED STONE FOR SUBBASE.
4) CONSTRUCT THE BERM CORE TO WITHIN 6" OF FINISHED GRADE IN 6" HORIZONTAL LIFTS. EACH LIFT SHALL BE COMPACTED IN ACCORDANCE WITH SECTION 203 OF THE STANDARD SPECIFICATIONS.
5) THE CONTRACTOR SHALL PLACE GEOTEXTILE FABRIC FOR ROADBED SUBGRADE SEPARATOR OVER THE CONSTRUCTED CORE WITH 12" MINIMUM OVERLAP AT ADJOINING PANELS.
6) THE CONTRACTOR SHALL PLACE GEOMEMBRANE OVER CORE. GEOMEMBRANE ENDS SHALL EXTEND 12" BELOW THE BOTTOM OF THE EARTH BERM CORE.
7) THE CONTRACTOR SHALL PLACE 6" OF APPROVED TOPSOIL OVER THE CONSTRUCTED CORE AND GEOMEMBRANE AND TAMP AND SEED.

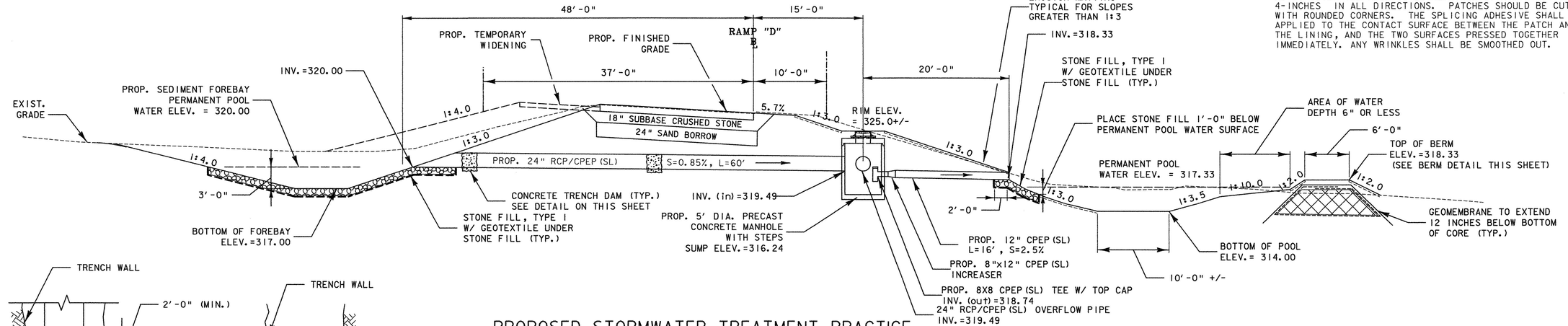

PROPOSED STORMWATER TREATMENT PRACTICE
RAMP "D" STA. 74+25

NOT TO SCALE

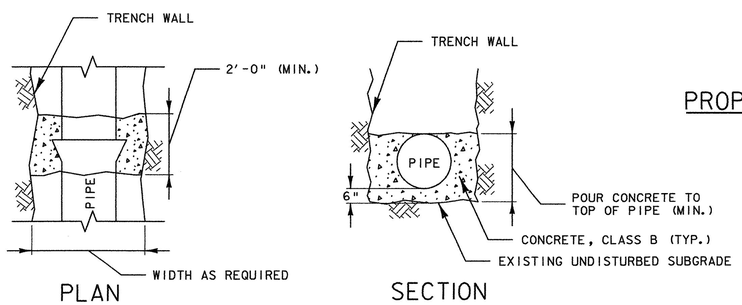

TYPICAL CONCRETE TRENCH DAM

NOT TO SCALE

GEOMEMBRANE LINER NOTES:

1. THE IMPERVIOUS GEOMEMBRANE SHALL BE AT LEAST 30 MILS IN THICKNESS AND SHALL CONSIST OF VIRGIN POLYVINYL CHLORIDE (PVC) RESINS, PLASTICIZER, STABILIZERS, AND SUCH MATERIALS THAT, WHEN COMPOUNDED, WILL MEET THE PHYSICAL REQUIREMENTS LISTED IN THE SPECIAL PROVISIONS.
2. INDIVIDUAL WIDTHS OF PVC MATERIALS SHALL BE FABRICATED INTO LARGE SECTIONS BY DIELECTRIC SEAMING INTO A SINGLE PIECE, OR INTO A MINIMUM NUMBER OF PANELS, AS REQUIRED TO FIT THE APPLICATION. LAP JOINTS WITH A MINIMUM JOINT WIDTH OF ¾-INCHES SHALL BE USED.
3. A 6-INCH MINIMUM LAYER OF TOPSOIL SHALL BE PLACED OVER THE PVC LINING AS SHOWN ON THE DRAWINGS. COVER MATERIAL SHALL BE APPROVED BY THE RESIDENT ENGINEER PRIOR TO PLACEMENT. MATERIAL SOIL CONTAINING SHARP, JAGGED ROCKS, ROOTS, DEBRIS OR ANY OTHER MATERIAL, WHICH MAY PUNCTURE THE MEMBRANE, SHALL NOT BE USED AS COVER MATERIAL.
4. THE CONTRACTOR MAY CHOOSE THE EQUIPMENT AND MANNER WITH WHICH TO PLACE THE COVER OVER THE LINER, PROVIDED: THE CONTRACTOR SATISFACTORILY DEMONSTRATES TO THE ENGINEER THAT BOTH THE EQUIPMENT AND MANNER USED TO PLACE THE CHOSEN COVER MATERIAL OVER THE LINING WILL NOT HAVE ANY DETRIMENTAL EFFECTS ON THE LINER.
5. FIELD SEAMS WILL BE MADE TO SEAL FACTORY FABRICATED PANELS OF PVC TOGETHER IN THE FIELD. SEAMS SHALL BE FORMED BY LAPPING THE EDGES OF PANELS A MINIMUM OF 6-INCHES. THE CONTACT SURFACES OF THE PANELS SHALL BE WIPED CLEAN TO REMOVE ALL DIRT, DUST OR OTHER SUBSTANCE. SUFFICIENT VINYL TO VINYL BODIES SOLVENT SHALL BE APPLIED TO THE CONTACT SURFACE IN THE SEAM AREA, AND THE TWO SURFACES PRESSED TOGETHER IMMEDIATELY. ANY WRINKLES SHALL BE SMOOTHED OUT. FIELD SEAMS SHALL HAVE A STRENGTH OF AT LEAST 85% OF THE SPECIFIED SHEET STRENGTH.
6. ALL CURING COMPOUNDS AND COATINGS SHALL BE COMPLETELY REMOVED FROM THE JOINT AREA. JOINING OF THE PVC TO THE BACK OF PANEL SHALL BE DONE WITH AN ADHESIVE. UNLESS OTHERWISE SHOWN ON THE DRAWINGS, THE MINIMUM WIDTH OF CONCRETE TO PVC JOINT SHALL BE 6-INCHES. IN ADDITION, MECHANICAL ATTACHMENTS MAY BE NECESSARY.
7. ANY NECESSARY REPAIRS TO THE PVC SHALL BE MADE WITH THE LINING MATERIAL ITSELF AND COLD APPLIED VINYL TO VINYL SPLICING ADHESIVES. PATCHES SHOULD BE CUT SO AS TO COVER THE AREA TO BE REPAIRED BY A MINIMUM OF 4-INCHES IN ALL DIRECTIONS. PATCHES SHOULD BE CUT WITH ROUNDED CORNERS. THE SPLICING ADHESIVE SHALL BE APPLIED TO THE CONTACT SURFACE BETWEEN THE PATCH AND THE LINING, AND THE TWO SURFACES PRESSED TOGETHER IMMEDIATELY. ANY WRINKLES SHALL BE SMOOTHED OUT.

PROJECT NAME: SOUTH BURLINGTON
PROJECT NUMBER: IM 089-3(37)

FILE NAME: z03al78typ.dgn
PROJECT LEADER: KEN UPMAL
DESIGNED BY: E.ATKINS/P. MILEWSKI
PLOT DATE: 5/5/2006
DRAWN BY: E.ATKINS
CHECKED BY: K.ISHIKURA
SHEET 23 OF 99

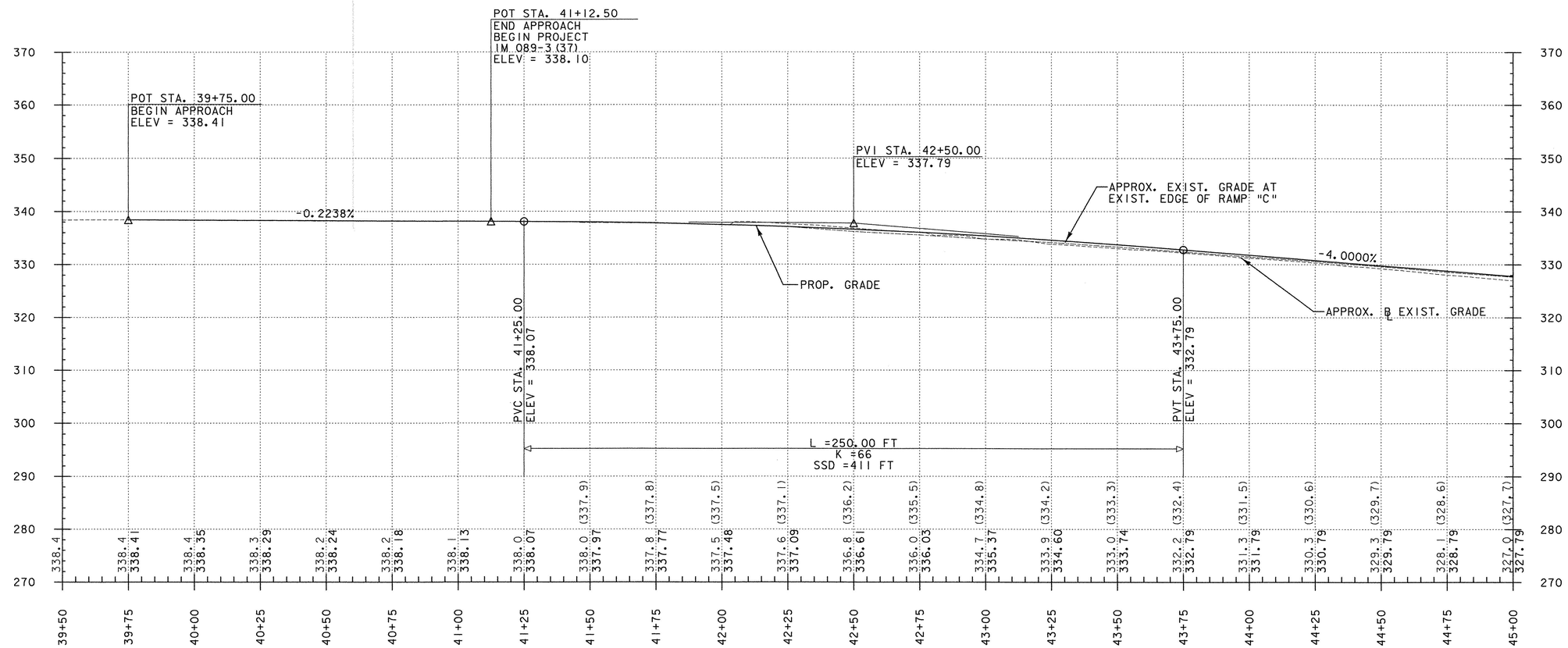

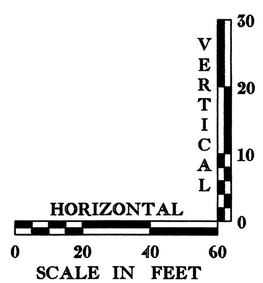

RAMP "C" PROFILE SHEET 1

DATUM

VERTICAL NAVD 88

HORIZONTAL NAD 83 (1996)

THE GRADES SHOWN TO THE NEAREST TENTH ARE THE ORIGINAL GROUND ELEVATIONS ALONG THE PROPOSED ALIGNMENT. THE GRADES IN PARENTHESES ARE THE ORIGINAL GROUND ELEVATIONS ALONG THE EXISTING WESTERN EDGE OF RAMP "C". THE GRADES SHOWN TO THE NEAREST HUNDREDTH ARE THE PROPOSED GRADES FOR THE NEW ALIGNMENT.

PROJECT NAME: SOUTH BURLINGTON

PROJECT NUMBER: IM 089-3(37)

FILE NAME: z03al78xs.dgn

PROJECT LEADER: KEN UPMAL

DESIGNED BY: E. ATKINS
P. MILEWSKI

PLOT DATE: 5/5/2006

DRAWN BY: E.ATKINS

CHECKED BY: K. ISHIKURA

SHEET 24 OF 99

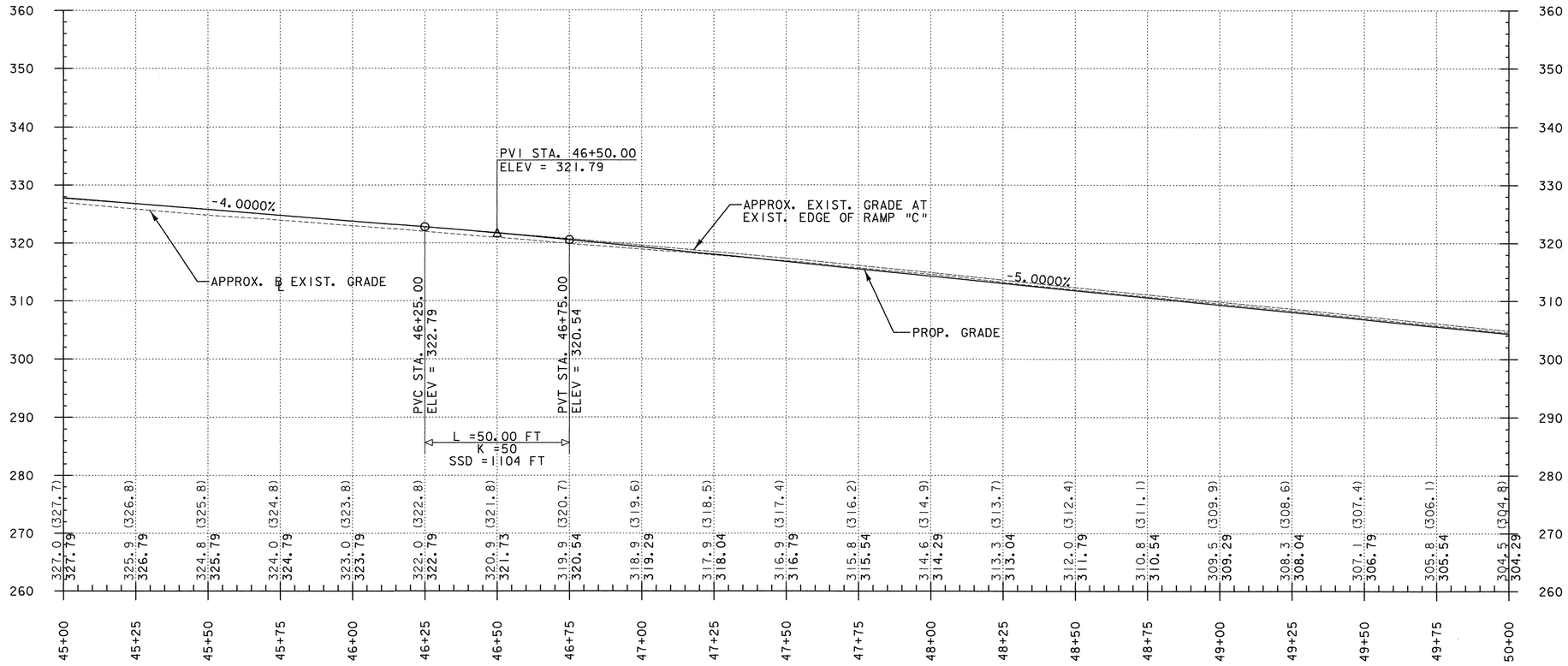

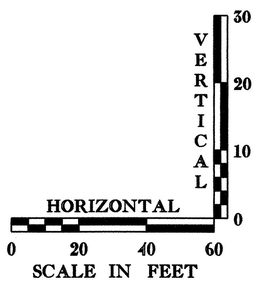

RAMP "C" PROFILE SHEET 2

THE GRADES SHOWN TO THE NEAREST TENTH ARE THE ORIGINAL GROUND ELEVATIONS ALONG THE PROPOSED ALIGNMENT. THE GRADES IN PARENTHESES ARE THE ORIGINAL GROUND ELEVATIONS ALONG THE EXISTING WESTERN EDGE OF RAMP "C". THE GRADES SHOWN TO THE NEAREST HUNDREDTH ARE THE PROPOSED GRADES FOR THE NEW ALIGNMENT.

DATUM

VERTICAL NAVD 88
HORIZONTAL NAD 83(1996)

PROJECT NAME: SOUTH BURLINGTON
PROJECT NUMBER: IM 089-3(37)

FILE NAME: z03al78xs.dgn
PROJECT LEADER: KEN UPMAL
DESIGNED BY: E. ATKINS
P. MILEWSKI
PLOT DATE: 5/5/2006
DRAWN BY: E.ATKINS
CHECKED BY: K. ISHIKURA
SHEET 25 OF 99

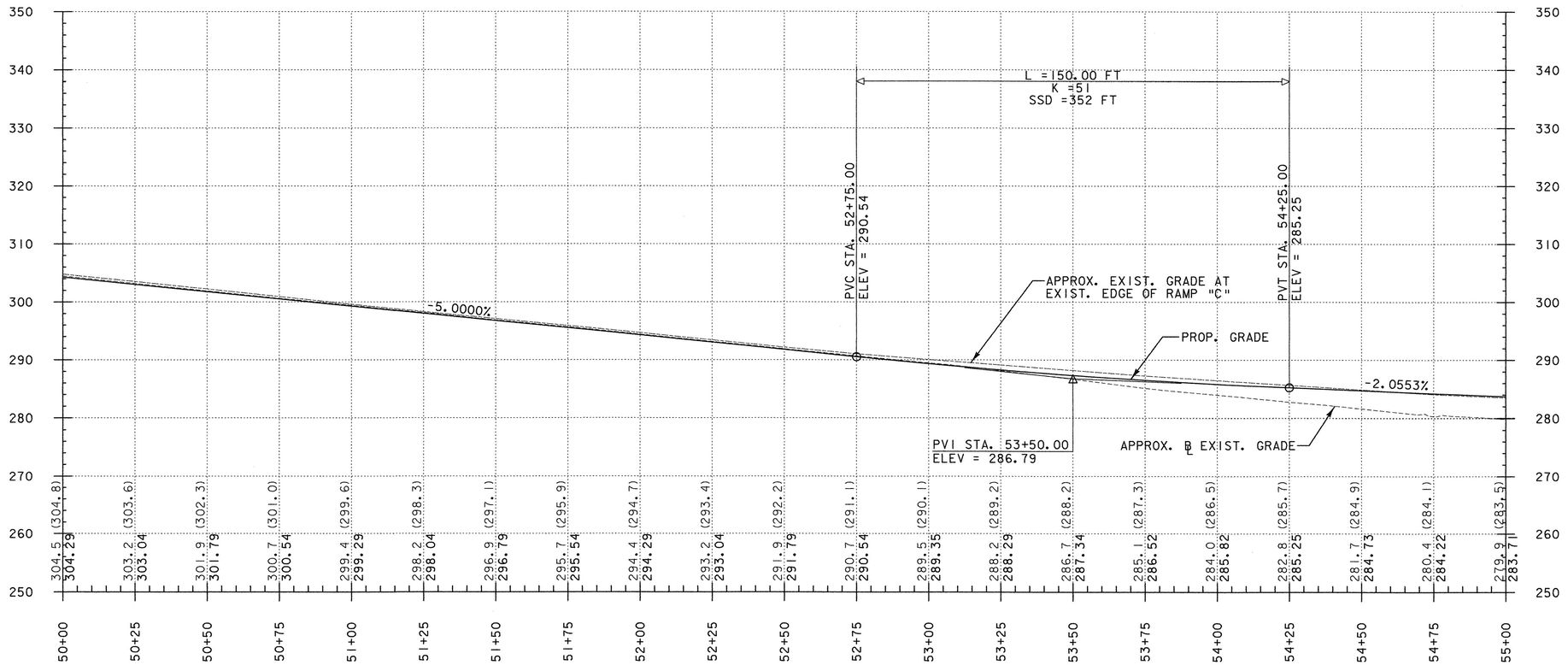

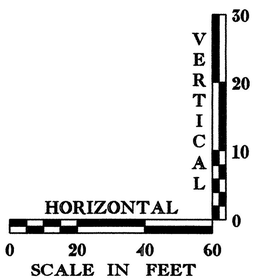

RAMP "C" PROFILE SHEET 3

DATUM

VERTICAL NAVD 88

HORIZONTAL NAD 83 (1996)

THE GRADES SHOWN TO THE NEAREST TENTH ARE THE ORIGINAL GROUND ELEVATIONS ALONG THE PROPOSED ALIGNMENT. THE GRADES IN PARENTHESES ARE THE ORIGINAL GROUND ELEVATIONS ALONG THE EXISTING WESTERN EDGE OF RAMP "C". THE GRADES SHOWN TO THE NEAREST HUNDREDTH ARE THE PROPOSED GRADES FOR THE NEW ALIGNMENT.

PROJECT NAME: SOUTH BURLINGTON
PROJECT NUMBER: IM 089-3(37)

FILE NAME: z03al78xs.dgn
PROJECT LEADER: KEN UPMAL
DESIGNED BY: E. ATKINS
P. MILEWSKI

PLOT DATE: 5/5/2006
DRAWN BY: E.ATKINS
CHECKED BY: K. ISHIKURA
SHEET 26 OF 99

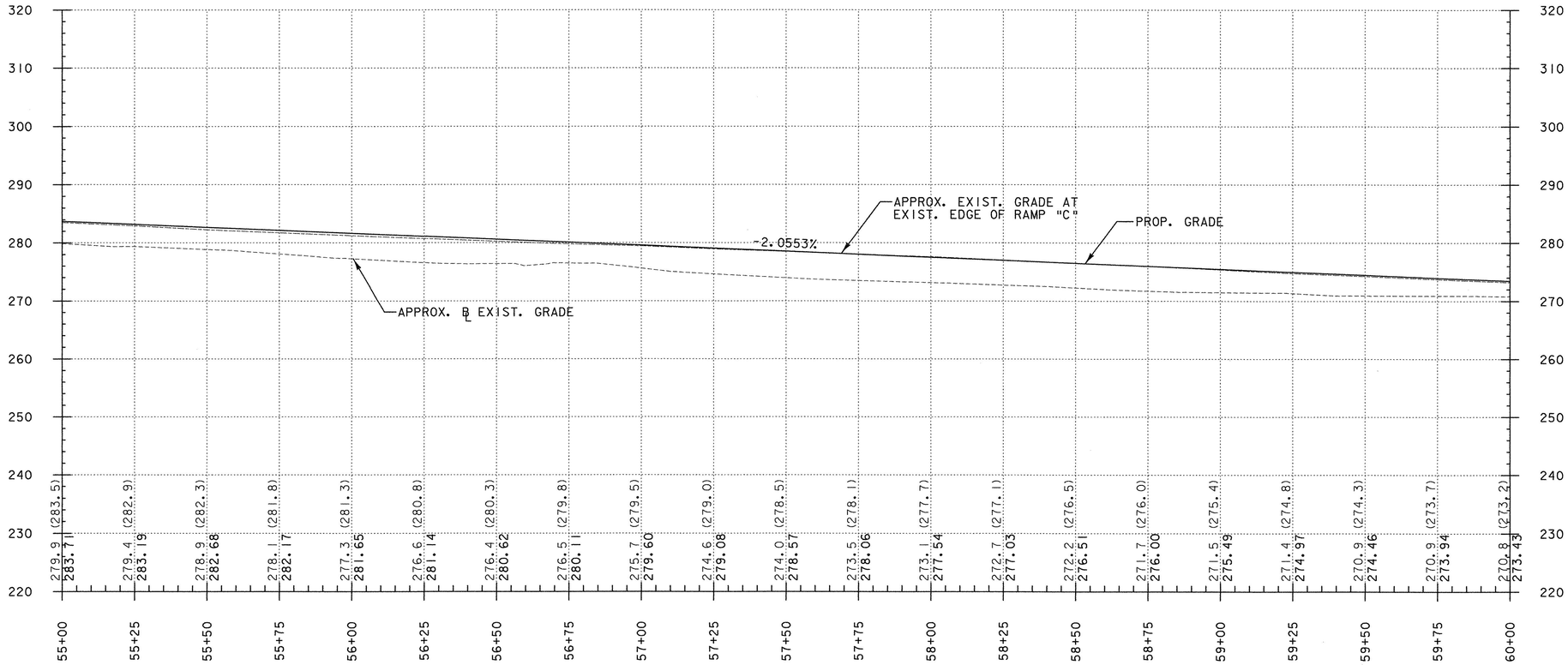

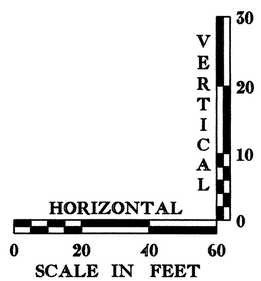

RAMP "C" PROFILE SHEET 4

DATUM

VERTICAL NAVD 88

HORIZONTAL NAD 83 (1996)

THE GRADES SHOWN TO THE NEAREST TENTH ARE THE ORIGINAL GROUND ELEVATIONS ALONG THE PROPOSED ALIGNMENT. THE GRADES IN PARENTHESES ARE THE ORIGINAL GROUND ELEVATIONS ALONG THE EXISTING WESTERN EDGE OF RAMP "C". THE GRADES SHOWN TO THE NEAREST HUNDREDTH ARE THE PROPOSED GRADES FOR THE NEW ALIGNMENT.

PROJECT NAME: SOUTH BURLINGTON

PROJECT NUMBER: IM 089-3(37)

FILE NAME: z03a178xs.dgn

PROJECT LEADER: KEN UPMAL

DESIGNED BY: E. ATKINS
P. MILEWSKI

PLOT DATE: 5/5/2006

DRAWN BY: E.ATKINS

CHECKED BY: K. ISHIKURA

SHEET 27 OF 99

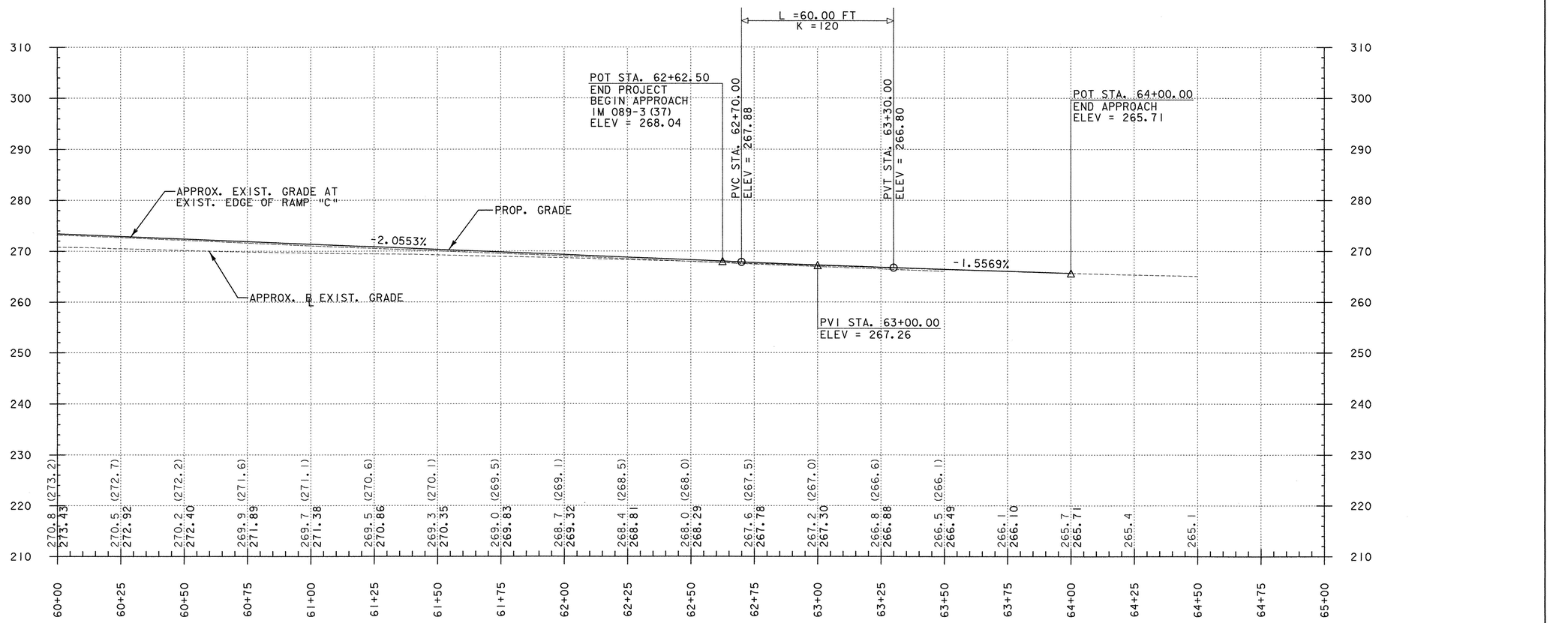

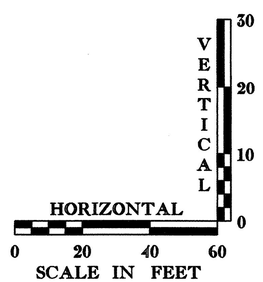

RAMP "C" PROFILE SHEET 5

DATUM

VERTICAL NAVD 88

HORIZONTAL NAD 83 (1996)

THE GRADES SHOWN TO THE NEAREST TENTH ARE THE ORIGINAL GROUND ELEVATIONS ALONG THE PROPOSED ALIGNMENT. THE GRADES IN PARENTHESES ARE THE ORIGINAL GROUND ELEVATIONS ALONG THE EXISTING WESTERN EDGE OF RAMP "C". THE GRADES SHOWN TO THE NEAREST HUNDREDTH ARE THE PROPOSED GRADES FOR THE NEW ALIGNMENT.

PROJECT NAME: SOUTH BURLINGTON
PROJECT NUMBER: IM 089-3(37)

FILE NAME: z03al78xs.dgn
PROJECT LEADER: KEN UPMAL
DESIGNED BY: E. ATKINS
P. MILEWSKI

PLOT DATE: 5/5/2006
DRAWN BY: E.ATKINS
CHECKED BY: K. ISHIKURA
SHEET 28 OF 99

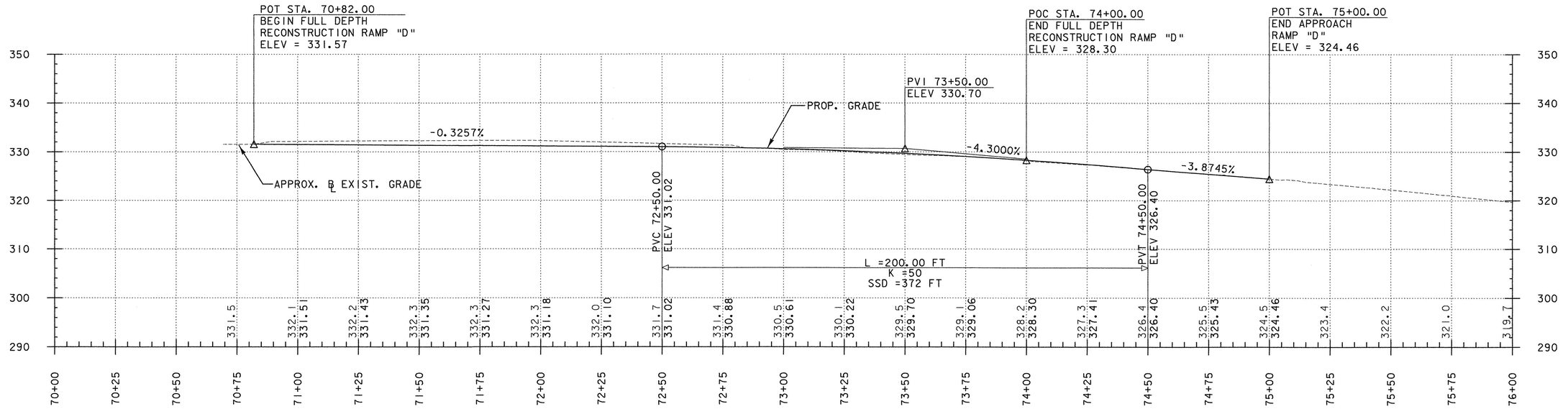

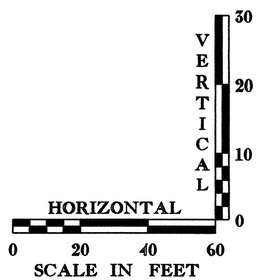

DATUM

VERTICAL NAVD 88

HORIZONTAL NAD 83 (1996)

THE GRADES SHOWN TO THE NEAREST TENTH ARE THE ORIGINAL GROUND ELEVATIONS ALONG THE PROPOSED ALIGNMENT. THE GRADES SHOWN TO THE NEAREST HUNDREDTH ARE THE PROPOSED GRADES FOR THE NEW ALIGNMENT.

RAMP "D" PROFILE SHEET 1

PROJECT NAME: SOUTH BURLINGTON

PROJECT NUMBER: IM 089-3(37)

FILE NAME: z03al78xs.dgn

PROJECT LEADER: KEN UPMAL

DESIGNED BY: E. ATKINS
P. MILEWSKI

PLOT DATE: 5/5/2006

DRAWN BY: E.ATKINS

CHECKED BY: K. ISHIKURA

SHEET 29 OF 99

EROSION CONTROL NARRATIVE

PROJECT DESCRIPTION

THE PROPOSED SAFETY IMPROVEMENTS FOR THE INTERSTATE 89 SOUTHBOUND EXIT 14W RAMP "C" PROJECT WILL INCLUDE THE WIDENING OF THE EXISTING RAMP "C"; WIDENING OF US ROUTE 2 BETWEEN RAMPS "C" AND "D" AND; MINOR ALIGNMENT MODIFICATION TO RAMP "D" TO REDUCE TRAFFIC CONGESTION ON RAMP "C" DURING PEAK TRAFFIC CONDITIONS. AS PART OF THE PROPOSED PROJECT, MODIFICATIONS TO OR REPLACEMENT OF EXISTING DRAIN INLETS AND OUTFALLS ARE PROPOSED TO FACILITATE STORMWATER MITIGATION IN THE AREA BETWEEN RAMPS "C" AND "D".

THE TOTAL PROJECT AREA IS 4.70 ACRES. THE DISTURBED AREA WITHIN THE PROJECT AREA IS 3.89 ACRES AND INCLUDES THE EXPANDED PORTIONS OF US ROUTE 2 AND RAMP "C", AREAS THAT WILL HAVE FULL DEPTH RECONSTRUCTION AND EARTHWORK FOR SLOPE GRADING. COLD PLANNING AND OVERLAY OF APPROACHES AND AREAS OF US ROUTE 2 WITHIN THE PROJECT LIMITS TOTALS 0.81 ACRES. IT IS ANTICIPATED THAT CONSTRUCTION STAGING CAN BE ACCOMPLISHED WITHIN THE EXISTING LIMITS OF WORK. ALL MATERIAL HANDLING AND DISPOSAL WORK SHALL BE IN ACCORDANCE WITH SECTION 105 OF THE STANDARD SPECIFICATIONS. WHEREVER POSSIBLE, EXCAVATED SOIL MATERIAL SHALL BE RE-USED WHEN APPROVED BY AND AT THE DISCRETION OF THE RESIDENT ENGINEER TO FORM EMBANKMENTS AND AS OTHER BORROW MATERIALS. IT IS ANTICIPATED THAT THERE WILL BE APPROXIMATELY 13,416 CUBIC YARDS (CY) OF SURPLUS SOIL WASTE AND THIS MATERIAL SHALL BE DISPOSED OF LEGALLY AND IN ACCORDANCE WITH SECTION 105 OF THE STANDARD SPECIFICATIONS SUCH THAT THE AREA DISTURBED BY THE SOILS WASTE (1.1 ACRES) PLUS THE EARTH DISTURBANCE FROM PROJECT ACTIVITIES (3.89 ACRES) DOES NOT EXCEED 5.0 ACRES. THE REQUIRED DEPTH OF THE SOIL WASTE DISPOSAL SUCH THAT IT WOULD NOT EXCEED 1.1 ACRES OF DISTURBANCE IS 7'-6" DEEP.

EROSION PREVENTION AND SEDIMENT CONTROL PRACTICES AND STORMWATER MANAGEMENT TECHNIQUES WERE INCORPORATED INTO THE DESIGN OF THIS PROJECT TO MINIMIZE IMPACTS TO THE CENTENNIAL BROOK WATERSHED AND THE SURROUNDING RESOURCE AREAS. THE "DESIGNER EROSION PREVENTION AND SEDIMENT CONTROL CHECKLIST" AND THE DRAFT "VERMONT HANDBOOK FOR SOIL EROSION AND SEDIMENT CONTROL ON CONSTRUCTION SITES" WERE USED TO DEVELOP THE EROSION PREVENTION AND SEDIMENT CONTROL PLANS. ALTHOUGH IT WAS DETERMINED THAT THIS PROJECT IS EXEMPT FROM REQUIRING AN INDIVIDUAL STORMWATER PERMIT, STORMWATER MITIGATION WAS PROPOSED IN COMPLIANCE WITH THE "VERMONT STORMWATER MANAGEMENT MANUALS". THE PROJECT WILL MEET APPLICABLE STORMWATER TREATMENT STANDARDS BY IMPLEMENTING STORMWATER TREATMENT PRACTICES (STP'S) SIZED IN ACCORDANCE WITH THE "VERMONT STORMWATER MANAGEMENT MANUALS".

SITE INVENTORY AND ANALYSIS

A SITE INVENTORY AND ANALYSIS WAS PERFORMED TO DETERMINE EXISTING SITE CHARACTERISTICS RELEVANT TO EACH AND THE FINDINGS ARE DISCUSSED BELOW. THE PROPOSED PROJECT SITE AREA IS APPROXIMATELY 4.7 ACRES AND IS BORDERED BY INTERSTATE 89 TO THE EAST AND NORTH, THE SHERATON HOTEL PROPERTY TO THE WEST AND US ROUTE 2 TO THE SOUTH, A SITE INVENTORY AND ANALYSIS WAS PERFORMED ON THE PROJECT SITE AREA TO IDENTIFY THE KEY SITE CHARACTERISTICS RELEVANT TO THE EROSION PREVENTION AND SEDIMENT CONTROL PLAN. THE FOLLOWING SITE CHARACTERISTICS ARE IDENTIFIED ON THE EXISTING CONDITIONS PLANS IN THE CONTRACT PLANS IN ACCORDANCE WITH THE VERMONT HANDBOOK FOR SOIL AND EROSION CONTROL ON CONSTRUCTION SITES AND ARE DISCUSSED IN THIS NARRATIVE: SITE TOPOGRAPHY; SOIL TYPES; VEGETATIVE COVER; PROXIMITY OF THE SITE TO EXISTING WATER BODIES; AND SITE DRAINAGE CHARACTERISTICS.

THE EXISTING SITE TOPOGRAPHY IS DEFINED BY THE INTERSTATE 89 CORRIDOR AND US ROUTE 2. THE TOPOGRAPHY TRENDS DOWNWARD FROM US ROUTE 2 TOWARDS INTERSTATE 89 ALONG RAMP "C" AND "D" AT SLOPES OF 4% TO 5%. THE EXISTING CONDITIONS CONTOURING HAVE BEEN SHOWN ON THE EXISTING CONDITIONS PLANS.

FROM THE PROJECT BEGINNING, THE EXISTING RAMP "C" DESCENDS NORTHWARD FROM US ROUTE 2 TOWARDS INTERSTATE 89 AT A 4% TO 5% SLOPE. IN THIS AREA, THE EXISTING CUT AND EMBANKMENT SLOPES ARE GENERALLY 3:1 BUT SOME CUT SLOPES ARE AS STEEP AS 2:1 WHERE RAMP "C" RUNS PARALLEL TO THE SHERATON HOTEL PROPERTY. THE EXISTING CUT AND EMBANKMENT SLOPES ARE WELL VEGETATED WITH GRASSES AND BRUSH AND SHOW NO SIGNIFICANT SIGNS OF EROSION. THE EXISTING PROFILE GRADE OF RAMP "C" FLATTENS TO APPROXIMATELY 1% AS IT APPROACHES INTERSTATE 89. ROADSIDE DITCHES ARE GENERALLY GRASS LINED AND FOLLOW THE EXISTING PROFILE GRADE OF THE ROADWAY.

THE PROJECT LIES NEAR THE SOUTHERN EDGE OF THE CENTENNIAL BROOK WATERSHED WHICH HAS BEEN CLASSIFIED AS A STORMWATER AND EROSION IMPAIRED WATERSHED. STORMWATER RUNOFF WITHIN THE PROJECT AREA IS COLLECTED BY DRAIN INLETS ALONG US ROUTE 2 AND RAMP "C" AND IS PRESENTLY DISCHARGED AT VARIOUS AT-GRADE LOCATIONS WHERE IT THEN FLOWS OVERLAND TO ADJACENT WETLANDS DESCRIBED LATER IN THIS NARRATIVE. VARIOUS WETLANDS WITHIN AND OUTSIDE OF THE PROJECT AREA COLLECT THE STORMWATER RUNOFF BEFORE IT REACHES CENTENNIAL BROOK OR ITS TRIBUTARIES.

A REVIEW OF THE NATIONAL RESOURCES CONSERVATION SERVICE (NRCS) SOIL SURVEY MAPS WAS CONDUCTED TO DETERMINE THE TYPES AND LOCATIONS OF THE SOILS UNDERLYING THE PROJECT AREA. THE TABLE BELOW OUTLINES THE SOILS THAT WERE DETERMINED TO BE LOCATED WITHIN OR ADJACENT TO THE PROPOSED PROJECT LIMITS. SOIL SURVEY GIS DATA FROM THE VERMONT CENTER FOR GEOGRAPHIC INFORMATION (VCGI) WAS DOWNLOADED AND OVERLAID ONTO THE DESIGN PLANS TO DETERMINE THE EXTENT OF THE SOILS. (REFER TO THE EXISTING CONDITIONS PLAN SHEETS) NEARLY THE ENTIRE PROJECT SITE IS UNDERLAIN WITH FILL LAND SOILS WHICH HAVE NOT HAD A SOIL ERODABILITY COEFFICIENT ('K' VALUE) DETERMINED. THE REMAINING SOILS HAVE A 'K' VALUE OF 0.49 OR 0.17. IT IS ASSUMED THAT THE UNDERLYING SOILS ARE SIMILAR TO THE SURROUNDING SOILS WHICH HAVE LOW AND HIGH ERODABILITY FACTORS. THEREFORE, ALL AREAS WILL REQUIRE IMMEDIATE SOIL ROUGHENING, HAY MULCHING AND PROMPT SEEDING AFTER BEING DISTURBED.

SOIL DESIGNATION	HYDROLOGIC SOIL GROUP CLASSIFICATION	SOIL ERODABILITY COEFFICIENTS
ADA ADAMS AND WINDSOR LOAMY SANDS, 0% TO 5% SLOPES	A	0.17 LOW ERODABILITY POTENTIAL
FU FILL LAND	NOT RATED	NOT RATED
HLB HARTLAND VERY FINE SANDY LOAM, 2% TO 6% SLOPES	B	0.49 HIGH ERODABILITY POTENTIAL
HLD HARTLAND VERY FINE SANDY LOAM, 12% TO 25% SLOPES	B	0.49 HIGH ERODABILITY POTENTIAL
VEB VERGENNES CLAY, 2% TO 6% SLOPES	D	0.49 HIGH ERODABILITY POTENTIAL

THERE ARE FOUR SMALL CLASS III WETLANDS LOCATED ADJACENT TO OR WITHIN THE PROJECT AREA (SEE THE EXISTING CONDITIONS PLAN AND FIGURE 2 TAKEN FROM THE DRAFT SCOPING REPORT FOR THIS PROJECT). EACH WETLAND WAS DESCRIBED AS FOLLOWS BY DUBOIS & KING, INC. IN APPENDIX D OF THE I-89 URBAN TRANSPORTATION IMPROVEMENTS (D&K STATUS REPORT):

- WETLAND 70, 69, AND 68: THESE WETLANDS SHARE THE SAME FEATURES. CLASS III. THE COVER TYPE IS EMERGENT. THE DOMINANT VEGETATION IS CATTAILS. THE PRINCIPAL VALUABLE FUNCTION IS SEDIMENT, TOXICANT AND/OR PATHOGEN RETENTION/TRANSFORMATION.
- WETLAND 66: CLASS III. ITS COVER TYPE IS EMERGENT. THE DOMINANT VEGETATION IS REED CANARY GRASS AND CATTAILS. THE PRINCIPAL VALUABLE FUNCTION IS SEDIMENT, TOXICANT AND/OR PATHOGEN RETENTION/TRANSFORMATION.

ACCORDING TO 2001 WETLANDS MAPPING PERFORMED BY THE CITY OF SOUTH BURLINGTON, THERE ARE FOUR WETLAND AREAS LOCATED OUTSIDE OF THE PROJECT TO THE NORTH AND NORTHWEST, OUTSIDE OF THE I-89 RIGHT-OF-WAY. THE FOLLOWING AREAS ARE IDENTIFIED ON THE ATTACHED FIGURE 2 FROM THE DRAFT SCOPING REPORT FOR THIS PROJECT.

- WETLAND A: THE COVER TYPE IS EMERGENT. THIS IS AN ISOLATED WETLAND NOT ASSOCIATED WITH ANY OTHER WATER RESOURCE.
- WETLAND B: THE COVER TYPE IS EMERGENT. THIS IS AN ISOLATED WETLAND THAT IS ASSOCIATED WITH A TRIBUTARY OF CENTENNIAL BROOK (A TRIBUTARY OF WINOOSKI RIVER).
- WETLAND C: THE COVER TYPE IS EMERGENT. THIS WETLAND IS PART OF A LARGER WETLAND SYSTEM THAT IS ASSOCIATED WITH A TRIBUTARY OF CENTENNIAL BROOK AND WITH WETLAND B,
- WETLAND D: THE COVER TYPE IS EMERGENT. THIS WETLAND IS PART OF A LARGER WETLAND SYSTEM THAT IS ASSOCIATED WITH ANOTHER TRIBUTARY OF CENTENNIAL BROOK. THIS SYSTEM IS ALSO BISECTED BY CARRIGAN DRIVE.

EROSION CONTROL AND GRADING LAYOUT PLANS AND TIMETABLE

PROPOSED GRADING

THE EROSION CONTROL AND GRADING LAYOUT SHEETS DEPICT THE PROPOSED GRADING AND EROSION CONTROL MEASURES TO BE EMPLOYED AS PART OF THE PROJECT. THE PROPOSED WORK WILL INCLUDE THE CONSTRUCTION OF NEW EMBANKMENTS AND ROADSIDE DITCHES TO IMPROVE SAFETY AND ROADWAY DRAINAGE WHILE ALSO DESIGNED TO LIMIT EROSION AND SEDIMENT TRANSPORT. ROADSIDE EMBANKMENTS WILL BE 3:1 OR LESS WHERE PRACTICAL. ALONG RAMP "D" 1.5:1 EMBANKMENT SLOPES ARE REQUIRED TO LIMIT DISTURBANCES AND FILL HEIGHTS.

THE PROPOSED GRADING MAINTAINS THE EXISTING DRAINAGE PATTERNS OVER THE SITE. RELOCATED AND NEW DRAIN INLETS WILL COLLECT THE RUNOFF AND DISCHARGE IT TO THE PROPOSED STORMWATER MITIGATION DETENTION POND FOR THE DRAINAGE NEAREST US ROUTE 2 OR WILL DISCHARGE TO THE EXISTING OUTFALLS FURTHER DOWN GRADIENT ALONG RAMP "C". STORMWATER DETENTION AND STONE TREATMENTS AT THE INLETS AND OUTLETS OF DITCHES AND PIPES WILL HELP TO REDUCE WATER VELOCITIES AND THE SUBSEQUENT EROSION AND SEDIMENT TRANSPORT. THE PROPOSED RAMP PROFILE AND ALIGNMENT WILL FOLLOW THE EXISTING RAMP ALIGNMENT AND PROFILE WHERE PRACTICAL AND WHERE THE PROPOSED RAMP IS LENGTHENED THE FILL HEIGHTS AND CUT DEPTHS WERE MINIMIZED TO REDUCE OVERALL SOIL DISTURBANCES AND LIMIT THE AMOUNT OF CLEARING AND GRUBBING REQUIRED FOR THIS PROJECT.

THE EROSION CONTROL AND GRADING LAYOUT SHEETS IN THE CONTRACT PLANS SPECIFY THAT ALL MAJOR GRADING AND EARTHWORK OPERATIONS SHALL BE CONDUCTED IN DRY-WEATHER CONDITIONS BETWEEN MAY 1ST AND OCTOBER 15TH WHENEVER PRACTICAL. THE CONTRACT PLANS ALSO SPECIFY THAT THE CONTRACTOR SHALL SCHEDULE THE TIME OF SOIL DISTURBANCES SO THAT AS LITTLE DISRUPTION OCCURS AS POSSIBLE AND SO THAT ANY DISTURBANCE CAN BE TEMPORARILY OR PERMANENTLY STABILIZED WITHIN 48 HOURS. IN ADDITION, TEMPORARY MULCHING SHALL BE DONE FOR ALL AREAS THAT WON'T BE WORKED ON FOR 5 DAYS OR MORE. NO MAJOR GRADING WORK SHALL BE PERFORMED BY THE CONTRACTOR IN THE WINTER BETWEEN OCTOBER 15TH AND MAY 1ST WHEN SOILS ARE TYPICALLY SATURATED WITH WATER OR FROZEN IN THE COLDER MONTHS.

PROPOSED EROSION PREVENTION AND SEDIMENT CONTROL MEASURES

IN ADDITION TO THE REQUIREMENTS OUTLINED ABOVE, THE CONTRACTOR, PRIOR TO THE START OF WORK, SHALL WRAP NON-WOVEN GEOTEXTILE FABRIC FOR FILTERS OVER ALL EXISTING AND PROPOSED DRAIN INLET GRATES WITHIN AREAS SUBJECT TO VEHICULAR TRAFFIC WITHIN THE LIMIT OF WORK AND MAINTAIN THEM UNTIL SUCH TIME AS THE PROJECT IS COMPLETED OR THE DRAIN INLET IS REMOVED. THE CONTRACTOR SHALL PROVIDE ENOUGH OVERLAP IN THE FABRIC TO ALLOW THE MATERIAL TO SET BETWEEN THE GRATE AND THE FRAME, USING THE WEIGHT OF THE GRATE TO HOLD THE FABRIC IN PLACE. DRAIN INLETS IN DITCHES SHALL BE PROTECTED WITH THE INLET PROTECTION DETAIL SHOWN IN THE CONTRACT PLANS. PERIODICALLY THE CONTRACTOR SHALL REMOVE ANY COLLECTED DEBRIS OR REPAIR OR REPLACE THE INLET PROTECTION MEASURE AS REQUIRED TO PROMOTE PROPER DRAINAGE.

PROJECT NAME: SOUTH BURLINGTON
PROJECT NUMBER: IM 089-3(37)

FILE NAME: z03al78ecnarr.dgn
PROJECT LEADER: KEN UPMAL
DESIGNED BY: E. ATKINS
EC NARRATIVE SHEET 1OF 2

PLOT DATE: 5/5/2006
DRAWN BY: E. ATKINS
CHECKED BY: K. ISHIKURA
SHEET 30 OF 99

EROSION CONTROL NARRATIVE

THE CONTRACTOR SHALL INSTALL EROSION MATTING AND SEED AND MULCH ALL AREAS NOT ANTICIPATED TO BE WORKED ON FOR 21 DAYS OR MORE. TO ASSURE A VIGOROUS CATCH OF VEGETATIVE COVER, SEEDING AND MULCHING SHALL BE COMPLETED BY SEPTEMBER 15TH TO THE EXTENT POSSIBLE, OR AS DIRECTED BY THE RESIDENT ENGINEER. SEEDING MIXTURES AND RATES ARE SPECIFIED IN THE TYPICAL SECTIONS OF THE CONTRACT PLANS AND HAVE BEEN ADOPTED FROM THE 2003 DRAFT VERMONT HANDBOOK FOR SOIL EROSION AND SEDIMENT CONTROL ON CONSTRUCTION SITES FOR SEEDING MIXTURE TYPE 'E' AND TYPE 'C'. THE TYPE 'E' SEEDING MIXTURE WAS CHOSEN BASED ON ITS ANTICIPATED PERFORMANCE GIVEN THE EXISTING AND PROPOSED SOIL CONDITIONS (WELL DRAINED) AND USAGE ALONG EMBANKMENT AND CUT SLOPES. TYPE 'C' WAS CHOSEN BASED ON ITS ANTICIPATED PERFORMANCE IN THE GRASS DITCHES AND AREAS SUBJECT TO CONCENTRATED WATER FLOW. FERTILIZING AND LIME APPLICATION RATES ARE ALSO SPECIFIED IN THE TYPICAL SECTIONS. ALL SEDIMENT AND EROSION PREVENTION AND CONTROL MEASURES SHALL BE COMPLETED AND BE IN PLACE BEFORE THE CONTRACTOR CAN BEGIN ADDITIONAL WORK.

TO PREVENT CONSTRUCTION EQUIPMENT FROM UNNECESSARILY DISTURBING SOIL OR VEGETATION THE CONTRACTOR SHALL INSTALL PROJECT DEMARCATION FENCING (PDF) AS SHOWN ON THE PLANS; GENERALLY JUST BEYOND THE PROPOSED SILT-FENCE OR 10' OFF OF THE REQUIRED SOIL DISTURBANCE LIMIT IF SILT FENCE IS NOT PROPOSED. THE LIMITS OF THE PDF ARE SHOWN ON THE PLANS. THE PDF PROVIDES A PHYSICAL BOUNDARY THAT THE CONTRACTOR MUST NOT DISTURB BEYOND. THE PDF MUST BE INSTALLED AT THE BEGINNING OF THE PROJECT. WHENEVER DAMAGED; THE CONTRACTOR MUST IMMEDIATELY REPAIR OR REPLACE THE PDF.

THE CONTRACTOR SHALL ALSO IMMEDIATELY ROUGHEN ALL DISTURBED SOIL SURFACES TO THE SATISFACTION OF THE RESIDENT ENGINEER BY THE USE OF TRACK DRIVEN BULLDOZERS, SHEEPSFOOT ROLLERS OR OTHER APPROVED METHODS. THE CONTRACTOR SHALL APPLY DUST CONTROL MEASURES OVER EXPOSED SURFACES NOT INTENDED TO BE VEGETATED. THE ON-SITE PLAN COORDINATOR SHALL INSPECT ALL EROSION AND SEDIMENT CONTROL STRUCTURES AND MEASURES AT LEAST ONCE EVERY SEVEN (7) CALENDAR DAYS AND AS SOON AS POSSIBLE BUT NOT MORE THEN 24 HOURS AFTER ANY STORM EVENT.

AS DISCUSSED PREVIOUSLY, THE PROPOSED ROADWAY EMBANKMENTS ARE GENERALLY 4:1. WHERE EMBANKMENT OR CUT SLOPES ARE 3:1 OR GREATER AND WITHIN THE GRASS CHANNELS; EROSION MATTING IS PROPOSED. WHERE EMBANKMENT OR CUT SLOPES EXCEED 2:1, STONE FILL, TYPE II IS PROPOSED FOR SLOPE STABILIZATION AND EROSION PREVENTION. THE CONTRACT PLANS TYPICAL SECTIONS AND DETAIL SHEETS CONTAIN DETAILS OUTLINING THE PROPER INSTALLATION AND MAINTENANCE OF THESE MEASURES. THE CONTRACTOR SHALL BE REQUIRED TO SUPPLEMENT THE EROSION PREVENTION AND SEDIMENT CONTROL PLANS IN THE CONTRACT PLANS WITH SPECIFIC METHODS OF INSTALLATION AND PRODUCT LITERATURE AS NECESSARY FOR APPROVAL BY THE RESIDENT ENGINEER.

TEMPORARY STONE CHECK DAMS ARE PROPOSED ALONG THE PROPOSED ROADSIDE GRASS DITCHES TO REDUCE WATER VELOCITIES AND ALLOW ANY SUSPENDED SEDIMENTS TO FALL OUT OF SUSPENSION BEFORE THEY REACH THE DOWNSTREAM RESOURCE AREAS. TEMPORARY STONE CHECK DAMS ARE PROPOSED IN THE ROADSIDE DITCHES TO REDUCE WATER VELOCITIES AND REDUCE SCOUR SO THAT A HEALTHY CATCH OF VEGETATION CAN BE ESTABLISHED OR BEFORE THE STONE IS PLACED IN THE DITCH. THE TEMPORARY CHECK DAMS SHALL BE SPACED TO ALLOW SUSPENDED SEDIMENT TO FALL OUT OF SUSPENSION. ONCE THE VEGETATION IS ESTABLISHED OR THE STONE HAS BEEN PLACED THE TEMPORARY STONE CHECK DAMS SHALL BE REMOVED. THE CONSTRUCTION AND PLACEMENT OF THE TEMPORARY STONE CHECK DAMS SHALL BE IN ACCORDANCE WITH THE DETAILS IN THE CONTRACT PLANS TYPICAL DETAILS OR AS DIRECTED BY THE RESIDENT ENGINEER. PERMANENT STONE PADS WILL BE PLACED AT THE END OF DITCHES AND CULVERTS TO DISSIPATE ENERGY AND TO PROMOTE SHEET FLOW.

IN ACCORDANCE WITH THE TYPICAL DETAILS, SILT FENCE IS PROPOSED AT THE TOE OF ALL EMBANKMENT SLOPES AND IMMEDIATELY UP HILL OF PROPOSED DITCHES IN CUTS WHERE THE EXISTING EMBANKMENTS ARE DISTURBED. THE CONTRACTOR SHALL MAINTAIN AND REPAIR ALL SILT FENCES AS NECESSARY AND REMOVE COLLECTED DEBRIS AND SEDIMENT WHEN NECESSARY OR AT REGULAR INTERVALS AS DEFINED IN THE MAINTENANCE SCHEDULE OR AS DIRECTED BY THE RESIDENT ENGINEER.

LASTLY, THE CONTRACTOR SHALL DESIGNATE AN ON-SITE EROSION CONTROL COORDINATOR WHO WILL BE RESPONSIBLE FOR THE MAINTENANCE, INSPECTION AND RECORDS PROGRAM FOR ALL CONTROL MEASURES. THE CONTRACTOR SHALL ALSO BE RESPONSIBLE FOR DEVELOPING A DETAILED EROSION PREVENTION AND SEDIMENT CONTROL PLAN AND TIMETABLE WHICH WILL BE COORDINATED WITH THE ACTUAL PROJECT CONSTRUCTION SCHEDULE AND PHASING FOR REVIEW AND APPROVAL BY VTRANS. THE FINAL EROSION PREVENTION AND SEDIMENT CONTROL PLAN AND TIMETABLE SHALL BE SUBMITTED AND APPROVED BEFORE THE CONTRACTOR CAN COMMENCE WORK.

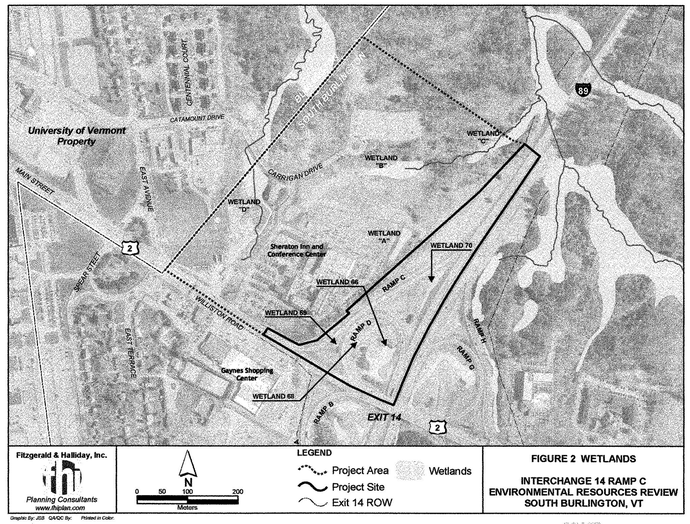

DRAFT

PROJECT NAME:	SOUTH BURLINGTON
PROJECT NUMBER:	IM 089-3(37)
FILE NAME: z03a178ecnarr.dgn	PLOT DATE: 5/5/2006
PROJECT LEADER: KEN UPMAL	DRAWN BY: E. ATKINS
DESIGNED BY: E. ATKINS	CHECKED BY: K. ISHIKURA
EC NARRATIVE SHEET 2 OF 2	SHEET 31 OF 99

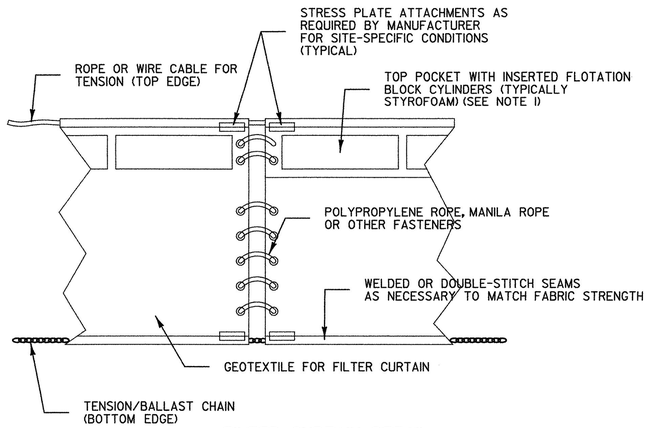

FILTER CURTAIN DETAIL

NOTES:

1. STYROFOAM BLOCK SIZE AND BUOYANCY REQUIREMENTS SHALL BE AS MANDATED BY MANUFACTURER'S REQUIREMENTS BASED ON WEIGHT AND LENGTH OF CURTAIN.
2. ATTACH STRESS PLATES TO FABRIC AND CABLE IN ACCORDANCE WITH MANUFACTURER'S RECOMMENDATIONS BASED ON SITE-SPECIFIC CONDITIONS.
3. STAKE/ANCHOR FLOATING SILT CURTAIN AT CORNERS AND AT SPACINGS IN ACCORDANCE WITH MANUFACTURER'S REQUIREMENTS.
4. ANCHOR FLOATING SILT CURTAIN ON LAND AT LOCATIONS UPSTREAM AND DOWNSTREAM OF CONSTRUCTION AREAS IN ACCORDANCE WITH MANUFACTURER'S RECOMMENDATIONS.
5. PAYMENT FOR INSTALLATION AND REMOVAL OF FILTER CURTAIN SHALL BE MADE UNDER THE GEOTEXTILE FOR FILTER CURTAIN ITEM.
6. PAYMENT FOR MONITORING FILTER CURTAIN SHALL BE MADE UNDER THE MONITORING EROSION & SEDIMENT CONTROL PLAN ITEM.
7. PAYMENT FOR MAINTAINING FILTER CURTAIN SHALL BE MADE UNDER THE FIELD MAINTENANCE OF EROSION & SEDIMENT CONTROL PLAN ITEM, UNLESS MAINTENANCE IS REQUIRED DUE TO POOR INSTALLATION PRACTICES.

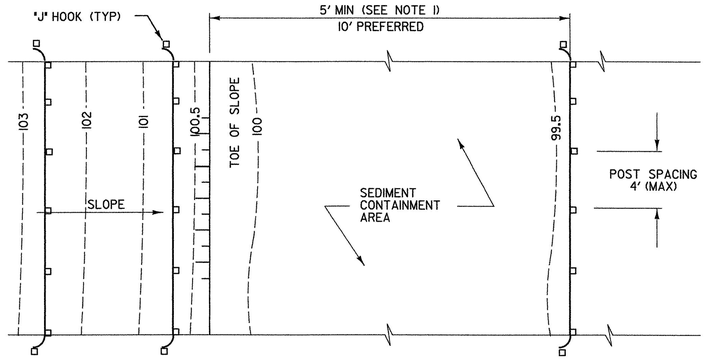

PLAN

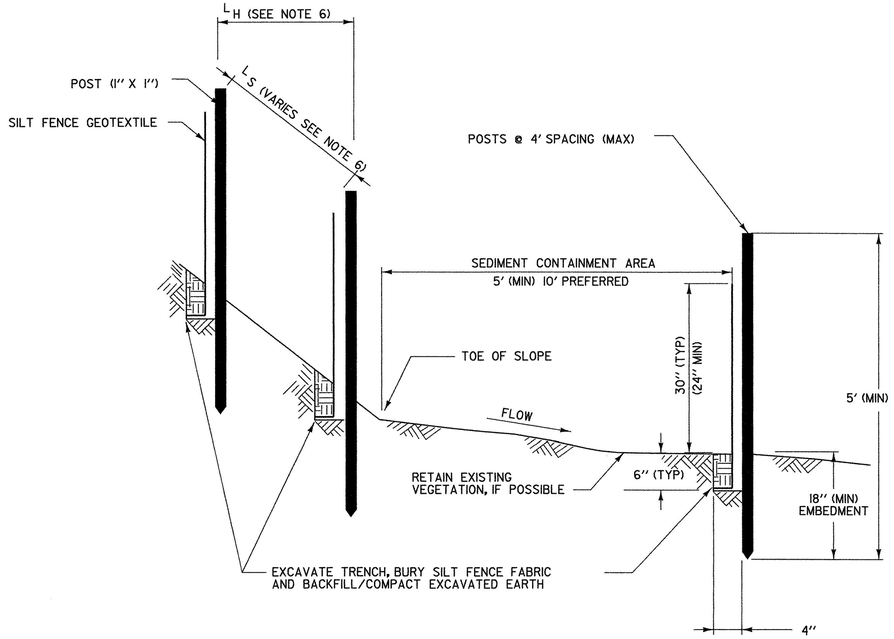

SECTION

SILT FENCE - TEMPORARY

SILT FENCE

APPLICATION NOTES:

A. THE PRIMARY PURPOSE OF SILT FENCE IS TO REDUCE RUNOFF VELOCITY AND TRAP SEDIMENT. VELOCITY IS REDUCED, WATER IS IMPOUNDED BEHIND THE MEASURE, AND SEDIMENT FALLS OUT OF SUSPENSION.

B. SILT FENCE SHALL BE INSTALLED ON A LINE OF EQUAL ELEVATION (CONTOUR). IT MAY BE INSTALLED AT INTERMEDIATE POINTS UP SLOPES AS WELL AS AT THE BOTTOM, AS SHOWN IN THE DETAIL.

C. SILT FENCE SHALL NOT BE USED ACROSS CONCENTRATED FLOW.

GENERAL NOTES:

1. SILT FENCE SHALL GENERALLY BE PLACED A MINIMUM OF 5 FEET BEYOND TOE OF SLOPE, 10 FEET PREFERRED, TO PROVIDE ADEQUATE AREA FOR SEDIMENT STORAGE AND FACILITATE MAINTENANCE OF SEDIMENT CONTAINMENT AREA.
2. ALL ENDS SHALL BE "J" HOOKED TO TRAP SEDIMENT.
3. IN AREAS WITH TWO SLOPES, SILT FENCE SHALL BE USED TO ERECT A DAM AND TRAP SEDIMENT AT THE BASE OF THE STEEPER SLOPE.
4. THE BOTTOM EDGE OF SILT FENCE SHALL BE BURIED A MINIMUM OF 6 INCHES BELOW GROUND, AND KEYED IN 4 INCHES. THE FENCE SHALL BE INSTALLED WITH THE POSTS ON THE DOWNSTREAM SIDE OF THE FABRIC.
5. MAXIMUM DRAINAGE AREA TRIBUTARY TO 100 FEET OF SILT FENCE SHALL BE 0.25 ACRES.
6. THE FOLLOWING ARE MAXIMUM SLOPE LENGTHS FOR THESE MEASURES:

CONSTRUCTED SLOPE	SLOPE LENGTH (LS) FT	HORIZONTAL LENGTH (LH) FT
3 : 1	80	75
4 : 1	130	125
5 : 1	200	200
> 5 : 1	250	250

7. MEASURES SHALL BE INSPECTED EVERY SEVEN (7) CALENDAR DAYS AND WITHIN 24 HOURS OF A STORM EVENT GREAT ENOUGH TO CAUSE WATER TO LEAVE THE CONSTRUCTION SITE.
8. MEASURES SHALL BE CLEANED AND REPAIRED AS NEEDED. SEDIMENT SHALL BE REMOVED WHEN ACCUMULATION REACHES ONE-HALF OF THE MEASURE HEIGHT. SEDIMENT SHALL BE DISPOSED OF AS UNSUITABLE MATERIAL.
9. SILT FENCE SHALL BE REMOVED WHEN THE AREA HAS BEEN STABILIZED. AT TIME OF REMOVAL OF THE SILT FENCE, THE DISTURBED AREA SHALL BE REPAIRED AND STABILIZED.
10. PAYMENT FOR INSTALLATION AND REMOVAL OF SILT FENCE SHALL BE MADE UNDER THE GEOTEXTILE FOR SILT FENCE ITEM.
11. PAYMENT FOR MONITORING SILT FENCE SHALL BE MADE UNDER THE MONITORING EROSION & SEDIMENT CONTROL PLAN ITEM.
12. PAYMENT FOR MAINTAINING SILT FENCE SHALL BE MADE UNDER THE FIELD MAINTENANCE OF EROSION & SEDIMENT CONTROL PLAN ITEM, UNLESS MAINTENANCE IS REQUIRED DUE TO POOR INSTALLATION PRACTICES.

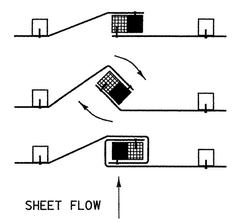

1. PLACE THE END POST OF ONE FENCE INSIDE THE END POST OF THE OTHER FENCE.
2. ROTATE BOTH POSTS AT LEAST 180 DEGREES IN A CLOCKWISE DIRECTION TO CREATE A TIGHT SEAL WITH THE FABRIC MATERIAL
3. DRIVE BOTH POSTS 18 INCHES INTO THE GROUND AND BURY THE FLAP IN THE TRENCH.

SPLICING DETAIL

PROJECT NAME:	SOUTH BURLINGTON
PROJECT NUMBER:	IM 089-3(37)
FILE NAME: z03al78typ.dgn	PLOT DATE: 5/5/2006
PROJECT LEADER: KEN UPMAL	DRAWN BY: E.ATKINS
DESIGNED BY: E.ATKINS/P. MILEWSKI	CHECKED BY: K.ISHIKURA
	SHEET 32 OF 99

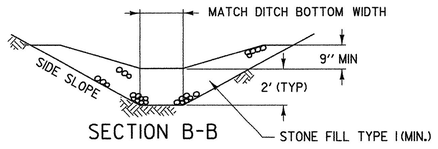

SECTION B-B

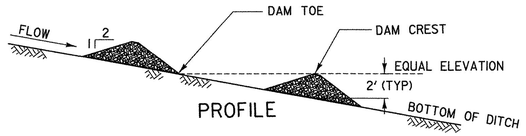

PROFILE

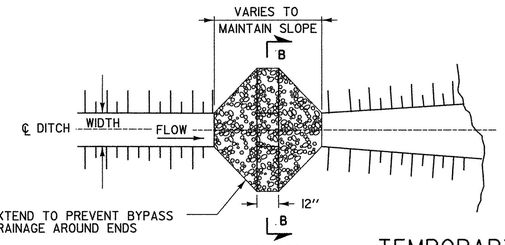

PLAN

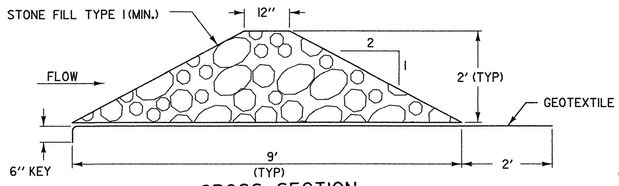

CROSS SECTION

TEMPORARY STONE CHECK DAM FOR TEMPORARY USE IN GRASS SWALES

NOT TO SCALE

STONE CHECK DAM PLACEMENT INTERVAL	
DITCH SLOPE	PLACEMENT INTERVAL **
1%	200 FT
2 %	100 FT
3 %	65 FT
4 %	50 FT
5 %	40 FT
6 %	30 FT
8 %	25 FT
10 %	20 FT

** BASED ON 2' TYPICAL HEIGHT

CHECK DAMS

APPLICATION NOTES:

A. THE PRIMARY PURPOSE OF A CHECK DAM IS TO REDUCE EROSION IN A CHANNEL BY REDUCING FLOW VELOCITY.

B. CHECK DAMS WILL CAPTURE SEDIMENT THAT FALLS OUT OF SUSPENSION BEHIND THE CHECK DAM DUE TO DECREASED VELOCITY.

C. CHECK DAMS ARE NOT INTENDED TO FILTER SEDIMENT FROM TURBID WATER.

D. DETAILS SHOWN SHALL BE USED FOR TEMPORARY INSTALLATION ONLY.

E. PREFABRICATED DAMS ARE NOT TO BE USED ON SLOPES GREATER THAN 5% OR PER MANUFACTURER'S SPECIFICATIONS.

F. PREFABRICATED DAM SPECIFICATIONS SHALL BE PROVIDED TO THE ENGINEER FOR APPROVAL PRIOR TO USE.

GENERAL NOTES:

1. GEOTEXTILE SHALL BE INSTALLED UNDER STONE FILL. IT SHALL BE KEYED IN ON THE UP HILL END AND SHALL EXTEND 2 FEET BEYOND THE STONE ON THE DOWN HILL END.
2. CORE MATERIAL FOR THE STONE CHECK DAM SHALL MEET THE GRADATION REQUIREMENTS OF STONE FILL TYPE I (MIN.). STONE SIZE SHOULD BE INCREASED WITH INCREASED SLOPE AND VELOCITY.
3. THE UPHILL END OF THE APRON FOR THE PREFABRICATED CHECK DAM SHALL BE STAPLED AND BURIED AS SHOWN IN DETAIL 'A' OR AS RECOMMENDED BY THE MANUFACTURERS LITERATURE.
4. MEASURES SHALL BE INSPECTED EVERY SEVEN (7) CALENDAR DAYS AND WITHIN 24 HOURS OF A STORM EVENT GREAT ENOUGH TO CAUSE WATER TO LEAVE THE CONSTRUCTION SITE.
5. MEASURES SHALL BE CLEANED AND REPAIRED AS NEEDED. SEDIMENT SHALL BE REMOVED WHEN ACCUMULATION REACHES ONE-HALF OF THE MEASURE HEIGHT. SEDIMENT SHALL BE DISPOSED OF AS UNSUITABLE MATERIAL.
6. AT TIME OF REMOVAL OF THE CHECK DAMS, THE DISTURBED AREA SHALL BE REPAIRED AND STABILIZED.
7. PAYMENT FOR INSTALLATION AND REMOVAL OF CHECK DAMS SHALL BE MADE UNDER STONE FILL, TYPE I (MOD. - CHECK DAM).
8. PAYMENT FOR MONITORING CHECK DAMS SHALL BE MADE UNDER THE MONITORING EROSION & SEDIMENT CONTROL PLAN ITEM.
9. PAYMENT FOR MAINTAINING CHECK DAMS SHALL BE MADE UNDER THE FIELD MAINTENANCE OF EROSION & SEDIMENT CONTROL PLAN ITEM, UNLESS MAINTENANCE IS REQUIRED DUE TO POOR INSTALLATION PRACTICES.

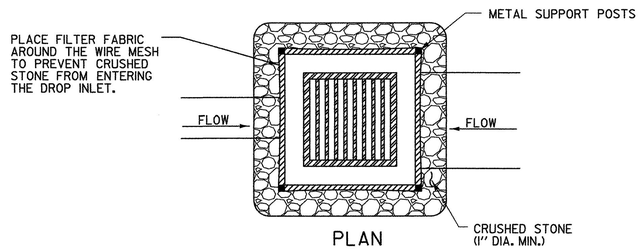

PLAN

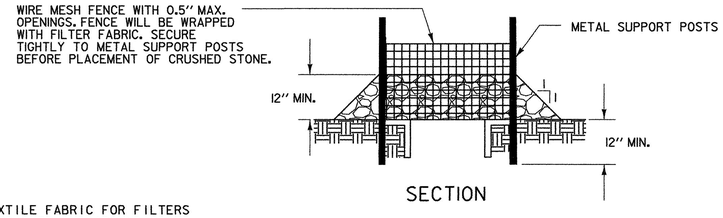

SECTION

ROCK BARRIER INLET PROTECTION FOR USE IN DITCHES

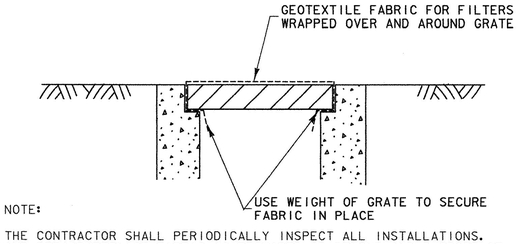

NOTE:

THE CONTRACTOR SHALL PERIODICALLY INSPECT ALL INSTALLATIONS. AND REPAIR/REPLACE FABRIC AS REQUIRED OR REMOVE AND DISPOSE OF COLLECTED DEBRIS. NO DEBRIS SHALL BE DISPOSED OF INTO INLETS.

TYPICAL FILTER FABRIC INSTALLATION FOR INLET PROTECTION IN AREAS SUBJECT TO TRAFFIC

DROP INLET PROTECTION

APPLICATION NOTES:

A. THE PRIMARY PURPOSE OF DRAINAGE STRUCTURE INLET PROTECTION IS TO PREVENT SEDIMENT FROM ENTERING A DRAINAGE SYSTEM BY PONDING WATER WHICH ALLOWS SEDIMENT TO FALL OUT OF SUSPENSION.

B. THESE EXAMPLES OF DROP INLET PROTECTION ARE NOT INTENDED FOR USE ON GRADES. ON GRADE THEY MAY CAUSE WATER TO BYPASS THE STRUCTURE, CREATING ADDITIONAL EROSION OR FLOODING.

C. POSSIBLE MODIFICATIONS FOR USE ON GRADE INCLUDE ADDING A BERM DOWNSTREAM OF THE INLET TO CREATE PONDING. CHECK DAMS MAY ALSO BE USED UPSTREAM OF THE INLET TO SLOW VELOCITIES.

D. PREFABRICATED DROP INLET PROTECTION MAY BE ALLOWED AT THE DISCRETION OF THE RESIDENT ENGINEER. SPECIFICATIONS SHALL BE PROVIDED TO THE ENGINEER FOR APPROVAL PRIOR TO USE.

GENERAL NOTES:

1. THE TOP OF THE INLET PROTECTION SHALL BE SET AT THE MAXIMUM DESIRED WATER LEVEL, BASED ON FIELD LOCATION AND CONDITIONS.
2. SILT FENCE GEOTEXTILE SHALL BE A SINGLE CONTINUOUS PIECE TO ELIMINATE JOINTS.
3. SPACE SILT FENCE POSTS EVENLY AROUND INLET WITH A MAXIMUM SPACING OF 3 FEET. DRIVE POSTS A MINIMUM OF 18 INCHES INTO GROUND. WIRE MESH MAY BE REQUIRED BEHIND GEOTEXTILE TO PROVIDE SUPPORT.
4. SILT FENCE GEOTEXTILE SHALL BE EMBEDDED A MINIMUM OF 6 INCHES AND BACKFILLED. GEOTEXTILE SHALL BE SECURELY FASTENED TO POSTS AND FRAME.
5. SECURE THE ENDS OF THE APRON FOR THE PREFABRICATED DRAINAGE STRUCTURE INLET PROTECTION WITH STAPLES AS DETAILED IN THE PLAN VIEW OR AS RECOMMENDED BY THE MANUFACTURERS LITERATURE.
6. MEASURES SHALL BE INSPECTED EVERY SEVEN (7) CALENDAR DAYS AND WITHIN 24 HOURS OF A STORM EVENT GREAT ENOUGH TO CAUSE WATER TO LEAVE THE CONSTRUCTION SITE.
7. MEASURES SHALL BE CLEANED AND REPAIRED AS NEEDED, SEDIMENT SHALL BE REMOVED WHEN ACCUMULATION REACHES ONE-HALF OF THE MEASURE HEIGHT. SEDIMENT SHALL BE DISPOSED OF AS UNSUITABLE MATERIAL.
8. PAYMENT FOR INSTALLATION AND REMOVAL OF INLET PROTECTION IN AREAS SUBJECT TO TRAFFIC SHALL BE MADE UNDER THE GEOTEXTILE FABRIC FOR FILTERS ITEM; INLET PROTECTION FOR USE IN DITCHES SHALL BE PAID UNDER THE STONE FILL, TYPE I (MOD. - INLET PROTECTION) ITEM.
9. PAYMENT FOR MONITORING INLET PROTECTION SHALL BE MADE UNDER THE MONITORING EROSION & SEDIMENT CONTROL PLAN ITEM.
10. PAYMENT FOR MAINTAINING INLET PROTECTION SHALL BE MADE UNDER THE FIELD MAINTENANCE OF EROSION & SEDIMENT CONTROL PLAN ITEM, UNLESS MAINTENANCE IS REQUIRED DUE TO POOR INSTALLATION PRACTICES.
11. DROP INLET PROTECTION WITH AN ELEVATED BERM NOT TO BE USED IN AREAS WHERE VEHICULAR TRAFFIC IS EXPECTED.

PROJECT NAME: SOUTH BURLINGTON
PROJECT NUMBER: IM 089-3(37)

FILE NAME: z03al78typ.dgn
PROJECT LEADER: KEN UPMAL
DESIGNED BY: E.ATKINS/P. MILEWSKI
PLOT DATE: 5/5/2006
DRAWN BY: E.ATKINS
CHECKED BY: K.ISHIKURA
SHEET 33 OF 99

STABILIZED CONSTRUCTION ENTRANCE

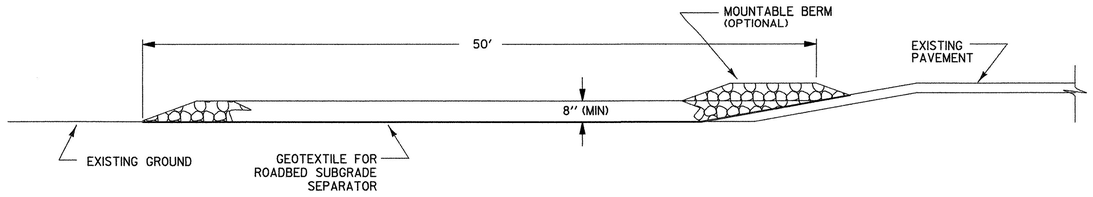

TYPICAL CONSTRUCTION ENTRANCE PROFILE
(CUT AND DITCH SECTIONS)

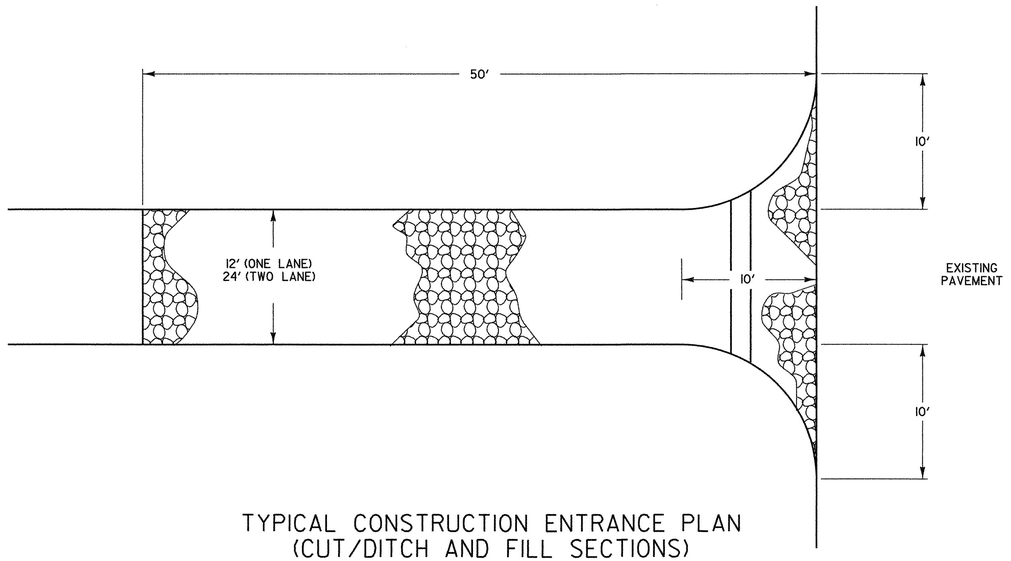

TYPICAL CONSTRUCTION ENTRANCE PLAN
(CUT/DITCH AND FILL SECTIONS)

APPLICATION NOTES:

A. THE PURPOSE OF A STABILIZED CONSTRUCTION ENTRANCE IS TO REDUCE OR ELIMINATE THE TRACKING OF SEDIMENT ONTO PUBLIC RIGHTS OF WAY OR STREETS.

GENERAL NOTES:

1. STONE SIZE - USE CLEAN STONE WITH GRADATION BETWEEN 2 INCHES AND 4 INCHES .
2. LENGTH - 50 FEET (MIN)
3. THICKNESS - 8 INCHES (MIN)
4. WIDTH - 12 FEET (MIN)
5. GEOTEXTILE FOR ROADBED SUBGRADE SEPARATOR SHALL BE PLACED OVER THE ENTIRE AREA PRIOR TO PLACING OF STONE.
6. SURFACE WATER - ALL SURFACE WATER FLOWING OR DIVERTED TOWARD CONSTRUCTION ENTRANCES SHALL BE PIPED ACROSS THE ENTRANCE AS DIRECTED BY THE ENGINEER. IF PIPING IS IMPRACTICAL, A MOUNTABLE BERM WITH 5:1 SLOPES WILL BE PERMITTED.
7. PROPOSED DRAINAGE PIPES SHALL BE SIZED WITH SUFFICIENT CAPACITY TO CARRY DITCH FLOWS. ALTERNATIVE WAYS OF TRANSPORTING DITCH DRAINAGE ACROSS CONSTRUCTION ENTRANCES MAY BE PROPOSED BY THE CONTRACTOR FOR APPROVAL BY THE ENGINEER.
8. WHEN WASHING OF VEHICLE IS NECESSARY, IT SHALL BE DONE ON AN AREA STABILIZED WITH STONE WHICH DRAINS INTO AN APPROVED SEDIMENT TRAPPING DEVICE.
9. MEASURES SHALL BE INSPECTED EVERY SEVEN (7) CALENDAR DAYS AND WITHIN 24 HOURS OF A STORM EVENT GREAT ENOUGH TO CAUSE WATER TO LEAVE THE CONSTRUCTION SITE.
10. MAINTENANCE- THE ENTRANCE SHALL BE MAINTAINED IN A CONDITION WHICH WILL PREVENT TRACKING OR FLOWING OF SEDIMENT ONTO PUBLIC RIGHTS-OF-WAY. ALL SEDIMENT SPILLED, DROPPED, WASHED, OR TRACKED ONTO PUBLIC RIGHTS-OF-WAY MUST BE REMOVED IMMEDIATELY.
11. AT THE TIME OF REMOVAL OF THE STABILIZED CONSTRUCTION ENTRANCE THE DISTURBED AREA SHALL BE REPAIRED AND STABILIZED.
12. PAYMENT FOR INSTALLATION AND REMOVAL OF THE STABILIZED CONSTRUCTION ENTRANCE SHALL BE MADE UNDER THE STONE FILL, TYPE I (MOD. - CONSTRUCTION ENTRANCE) ITEM.
13. PAYMENT FOR MONITORING STABILIZED CONSTRUCTION ENTRANCES SHALL BE MADE UNDER THE MONITORING EROSION & SEDIMENT CONTROL PLAN ITEM.
14. PAYMENT FOR MAINTAINING THE CONSTRUCTION ENTRANCE SHALL BE MADE UNDER THE FIELD MAINTENANCE OF EROSION & SEDIMENT CONTROL PLAN ITEM, UNLESS MAINTENANCE IS REQUIRED DUE TO POOR INSTALLATION PRACTICES.

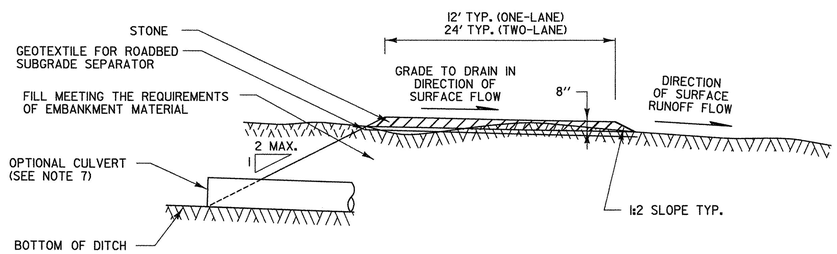

TYPICAL CONSTRUCTION ENTRANCE SECTION

PROJECT NAME: SOUTH BURLINGTON	
PROJECT NUMBER: IM 089-3(37)	
FILE NAME: z03a178typ.dgn	PLOT DATE: 5/5/2006
PROJECT LEADER: KEN UPMAL	DRAWN BY: E.ATKINS
DESIGNED BY: E.ATKINS/P. MILEWSKI	CHECKED BY: K.ISHIKURA
	SHEET 34 OF 99

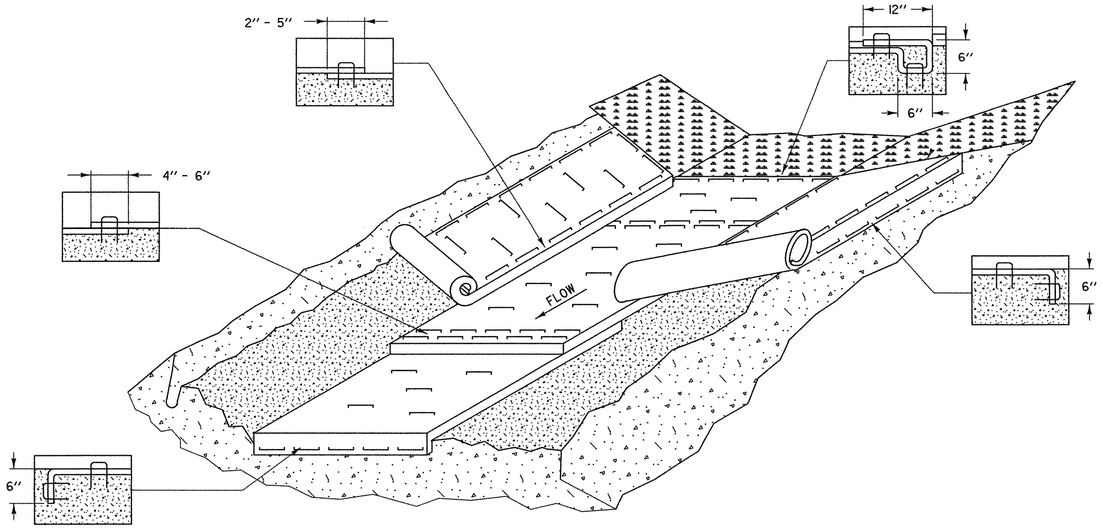

EROSION PROTECTION FOR DITCHES

APPLICATION NOTES:

A. THE PURPOSE OF LINING THE DITCH WITH EROSION MATTING IS TO REDUCE EROSION AND AID THE ESTABLISHMENT OF VEGETATION AT LOW VELOCITIES.

B. THE FOLLOWING CHARTS SHALL BE USED TO DETERMINE THE APPROPRIATE EROSION CONTROL MEASURE:

DITCH AND CHANNEL PROTECTION	
SLOPE	LINING
< 1%	GRASS
1% TO 4 %	EROSION MATTING
4 % TO 10 %	STONE FILL, TYPE I
> 10 %	STONE FILL, TYPE II

STONE FILL THICKNESS	
STONE FILL TYPE	THICKNESS
TYPE I	1 FT
TYPE II	2 FT

GENERAL NOTES:

1. WATER MAY NEED TO BE DIVERTED TO ALLOW PROPER MATTING INSTALLATION.
2. GRADE AND SMOOTH CHANNEL TO PROVIDE GOOD MATTING TO SOIL SURFACE CONTACT.
3. APPLY FERTILIZER, LIME, AND SEED PRIOR TO PLACING MATTING.
4. INSTALL MATTING IN THE CENTER OF THE CHANNEL, IN THE DIRECTION OF THE WATER FLOW.
5. INSTALL MATTING ON THE SIDE SLOPES OF THE CHANNEL, OVERLAPPING THE CENTER MAT.
6. ANCHOR MATTING AS SHOWN, UTILIZING ANCHOR STAPLES. STAPLE PLACEMENT SHALL BE DETERMINED BY THE MANUFACTURER'S INSTALLATION INSTRUCTIONS.
7. MEASURES SHALL BE INSPECTED EVERY SEVEN (7) CALENDAR DAYS AND WITHIN 24 HOURS OF A STORM EVENT GREAT ENOUGH TO CAUSE WATER TO LEAVE THE CONSTRUCTION SITE.
8. MEASURES SHALL BE REPAIRED AND RESTAPLED AS NECESSARY TO ENSURE PROPER FUNCTION.
9. PAYMENT FOR INSTALLATION OF MATTING SHALL BE MADE UNDER THE EROSION CONTROL WITH MATTING ITEM.
10. PAYMENT FOR MONITORING EROSION CONTROL MATTING SHALL BE MADE UNDER THE MONITORING EROSION & SEDIMENT CONTROL PLAN ITEM.
11. PAYMENT FOR MAINTAINING DITCH PROTECTION SHALL BE MADE UNDER THE FIELD MAINTENANCE OF EROSION & SEDIMENT CONTROL PLAN ITEM, UNLESS MAINTENANCE IS REQUIRED DUE TO POOR INSTALLATION PRACTICES.

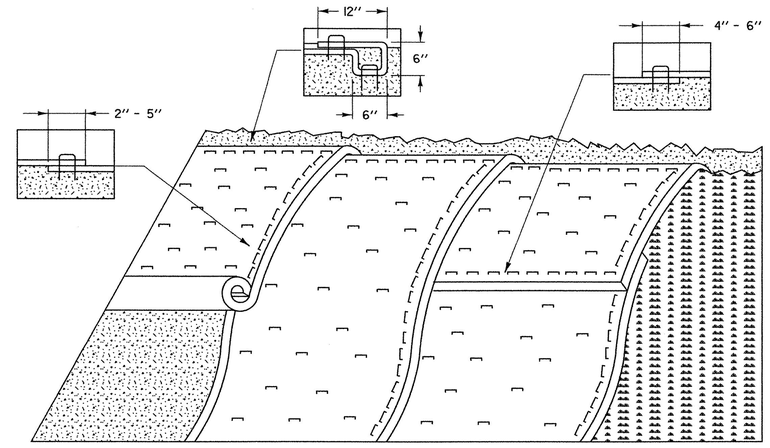

EROSION PREVENTION FOR SIDE SLOPES

APPLICATION NOTES:

A. THE PURPOSE OF MATTING ON SIDE SLOPES IS TO REDUCE EROSION AND AID THE ESTABLISHMENT OF VEGETATION

B. EROSION CONTROL MATTING SHALL BE USED FOR THE FOLLOWING REASONS:

- SIDE SLOPES > 3:1 (H:V)
- AREAS WHERE SEED AND MULCH WILL NOT STAY IN PLACE ALONE
- WHERE SEEDING IS OUTSIDE THE GROWING SEASON.

GENERAL NOTES:

1. GRADE AND SMOOTH THE SLOPE TO PROVIDE GOOD MATTING TO SOIL SURFACE CONTACT.
2. APPLY FERTILIZER, LIME, AND SEED PRIOR TO PLACING MATTING.
3. ANCHOR MATTING AS SHOWN, UTILIZING ANCHOR STAPLES. STAPLE PLACEMENT SHALL BE DETERMINED BY THE MANUFACTURER'S INSTALLATION INSTRUCTIONS.
4. UNROLL MATTING VERTICALLY DOWN SLOPE IN THE DIRECTION OF WATER FLOW.
5. OVERLAP UPPER MATTING OVER LOWER MATTING AS SHOWN.
6. OVERLAP ADJACENT MATTING AS SHOWN.
7. CUT EXCESS MATTING AT END OF SLOPE AND ANCHOR THE END.
8. MEASURES SHALL BE INSPECTED EVERY SEVEN (7) CALENDAR DAYS AND WITHIN 24 HOURS OF A STORM EVENT GREAT ENOUGH TO CAUSE WATER TO LEAVE THE CONSTRUCTION SITE.
9. MATTING SHALL BE REPAIRED AND RESTAPLED AS NECESSARY TO ENSURE PROPER FUNCTION.
10. PAYMENT FOR INSTALLATION OF MATTING SHALL BE MADE UNDER THE EROSION MATTING ITEM.
11. PAYMENT FOR MONITORING EROSION CONTROL MATTING SHALL BE MADE UNDER THE MONITORING EROSION & SEDIMENT CONTROL PLAN ITEM.
12. PAYMENT FOR MAINTAINING SLOPE PROTECTION SHALL BE MADE UNDER THE FIELD MAINTENANCE OF EROSION & SEDIMENT CONTROL PLAN ITEM, UNLESS MAINTENANCE IS REQUIRED DUE TO POOR INSTALLATION PRACTICES.

PROJECT NAME: SOUTH BURLINGTON
PROJECT NUMBER: IM 089-3(37)

FILE NAME: z03al78typ.dgn
PROJECT LEADER: KEN UPMAL
DESIGNED BY: E.ATKINS/P. MILEWSKI
PLOT DATE: 5/5/2006
DRAWN BY: E.ATKINS
CHECKED BY: K.ISHIKURA
SHEET 35 OF 99

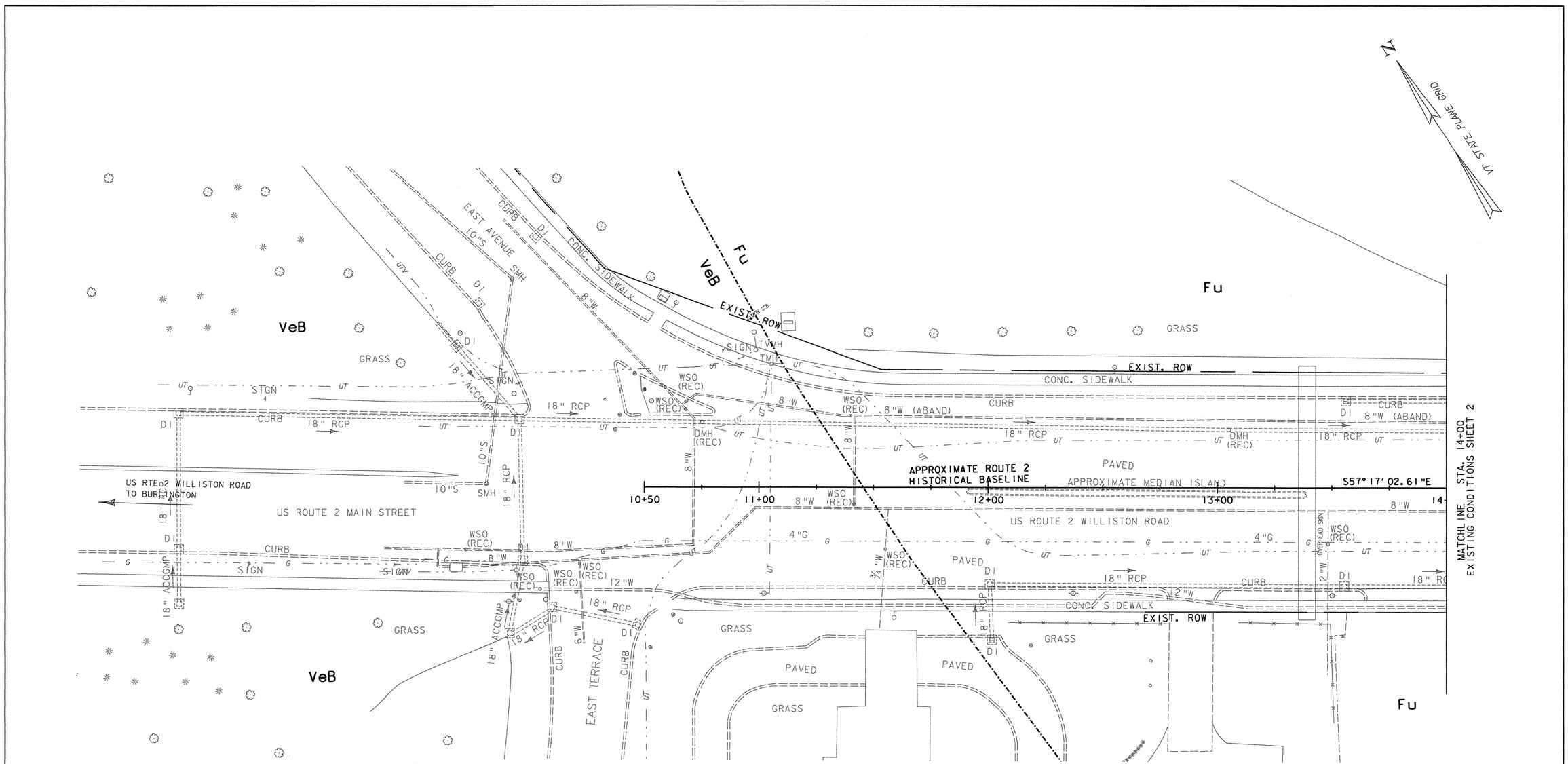

LEGEND

SOIL TYPE BOUNDARY	
300	10' INTERVAL CONTOUR
	2' INTERVAL CONTOUR
	EXIST. PROPERTY/ROW LINE
(ABAND)	EXIST. ABANDONED UTILITY
(REC)	RECORD INFORMATION

SOIL LEGEND

SOIL DESIGNATION	HYDROLOGIC SOIL GROUP CLASSIFICATION	SOIL ERODABILITY COEFFICIENTS
AdA = ADAMS AND WINDSOR LOAMY SANDS, 0 TO 5 PERCENT SLOPES	A	0.17 (NOT HIGHLY ERODABLE)
Fu = FILL LAND	NOT RATED	(NOT RATED)
HIB = HARTLAND VERY FINE SANDY LOAM, 2 TO 6 PERCENT SLOPES	B	0.49 (POTENTIALLY HIGHLY ERODABLE)
HID = HARTLAND VERY FINE SANDY LOAM, 12 TO 25 PERCENT SLOPES	B	0.49 (HIGHLY ERODABLE)
VeB = VERGENNES CLAY, 2 TO 6 PERCENT SLOPES	D	0.49 (POTENTIALLY HIGHLY ERODABLE)

DATUM

VERTICAL NAVD 88
HORIZONTAL NAD 83 (1996)

0 20 40
SCALE IN FEET

EXISTING CONDITIONS PLAN SHEET 1

PROJECT NAME: SOUTH BURLINGTON
PROJECT NUMBER: IM 089-3(37)

FILE NAME: z03al78bdr.dgn
PROJECT LEADER: KEN UPMAL
DESIGNED BY: E.ATKINS/P.MILEWSKI
PLOT DATE: 5/5/2006
DRAWN BY: P.MILEWSKI
CHECKED BY: K.ISHIKURA
SHEET 36 OF 99

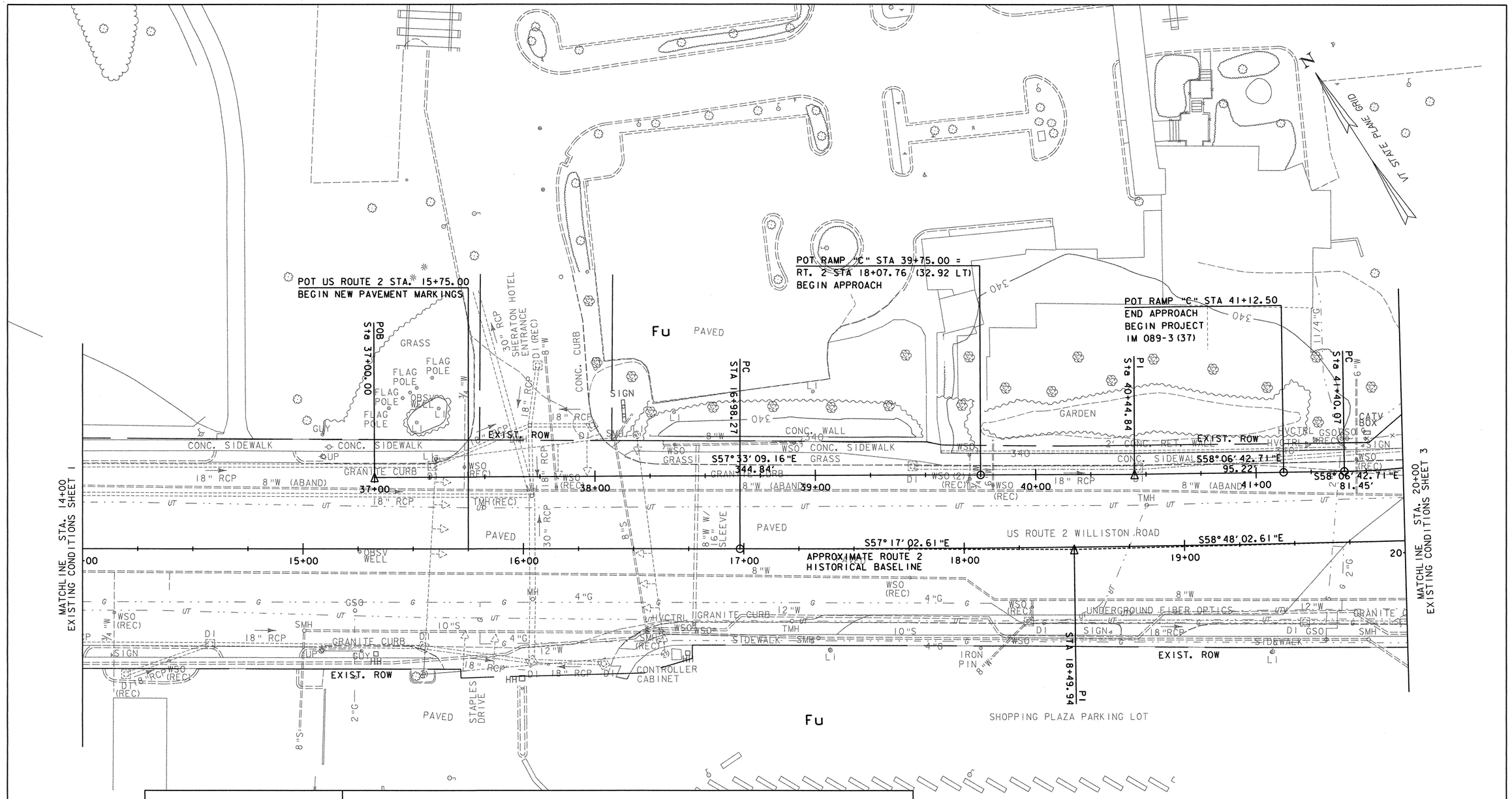

LEGEND

-·-·-·-·-	SOIL TYPE BOUNDARY
—300—	10' INTERVAL CONTOUR
- - - - -	2' INTERVAL CONTOUR
—·—·—	EXIST. PROPERTY/ROW LINE
(ABAND)	EXIST. ABANDONED UTILITY
(REC)	RECORD INFORMATION

SOIL LEGEND

SOIL DESIGNATION		HYDROLOGIC SOIL GROUP CLASSIFICATION	SOIL ERODABILITY COEFFICIENTS
AdA =	ADAMS AND WINDSOR LOAMY SANDS, 0 TO 5 PERCENT SLOPES	A	0.17 (NOT HIGHLY ERODABLE)
Fu =	FILL LAND	NOT RATED	(NOT RATED)
HIB =	HARTLAND VERY FINE SANDY LOAM, 2 TO 6 PERCENT SLOPES	B	0.49 (POTENTIALLY HIGHLY ERODABLE)
HID =	HARTLAND VERY FINE SANDY LOAM, 12 TO 25 PERCENT SLOPES	B	0.49 (HIGHLY ERODABLE)
VeB =	VERGENNES CLAY, 2 TO 6 PERCENT SLOPES	D	0.49 (POTENTIALLY HIGHLY ERODABLE)

DATUM

VERTICAL NAVD 88
HORIZONTAL NAD 83 (1996)

0 20 40
SCALE IN FEET

EXISTING CONDITIONS PLAN SHEET 2

PROJECT NAME: SOUTH BURLINGTON
PROJECT NUMBER: IM 089-3(37)

FILE NAME: z03a178bdr.dgn
PROJECT LEADER: KEN UPMAL
DESIGNED BY: E.ATKINS/P.MILEWSKI
PLOT DATE: 5/5/2006
DRAWN BY: P.MILEWSKI
CHECKED BY: K.ISHIKURA
SHEET 37 OF 99

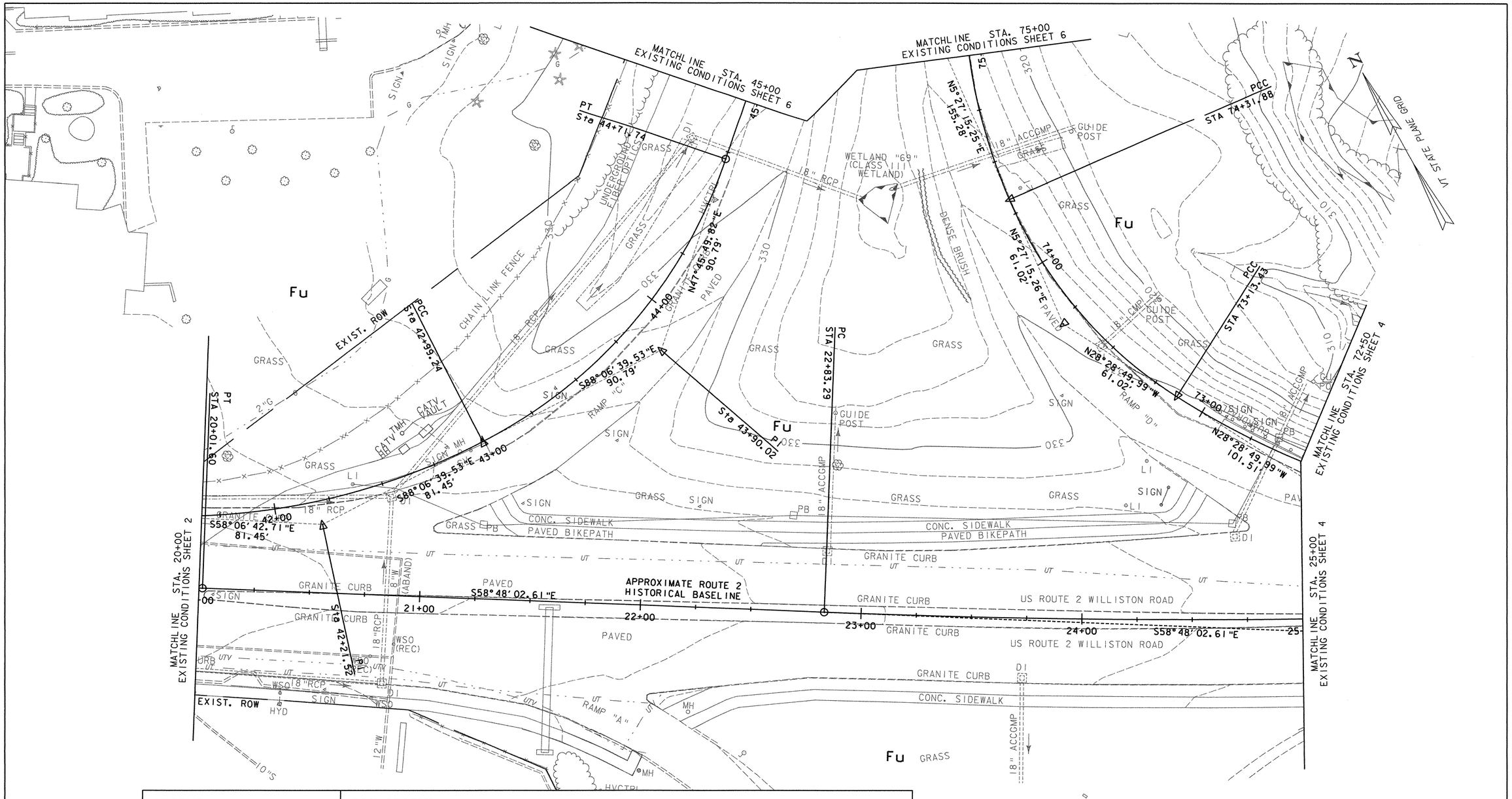

LEGEND

-·-·-·-·-	SOIL TYPE BOUNDARY
—300—	10' INTERVAL CONTOUR
- - - - -	2' INTERVAL CONTOUR
———	EXIST. PROPERTY/ROW LINE
(ABAND)	EXIST. ABANDONED UTILITY
(REC)	RECORD INFORMATION

SOIL LEGEND

SOIL DESIGNATION	HYDROLOGIC SOIL GROUP CLASSIFICATION	SOIL ERODABILITY COEFFICIENTS
AdA = ADAMS AND WINDSOR LOAMY SANDS, 0 TO 5 PERCENT SLOPES	A	0.17 (NOT HIGHLY ERODABLE)
Fu = FILL LAND	NOT RATED	(NOT RATED)
HIB = HARTLAND VERY FINE SANDY LOAM, 2 TO 6 PERCENT SLOPES	B	0.49 (POTENTIALLY HIGHLY ERODABLE)
HID = HARTLAND VERY FINE SANDY LOAM, 12 TO 25 PERCENT SLOPES	B	0.49 (HIGHLY ERODABLE)
VeB = VERGENNES CLAY, 2 TO 6 PERCENT SLOPES	D	0.49 (POTENTIALLY HIGHLY ERODABLE)

DATUM

VERTICAL NAVD 88
HORIZONTAL NAD 83 (1996)

0 20 40
SCALE IN FEET

EXISTING CONDITIONS PLAN SHEET 3

PROJECT NAME: SOUTH BURLINGTON
PROJECT NUMBER: IM 089-3(37)

FILE NAME: z03al78bdr.dgn
PROJECT LEADER: KEN UPMAL
DESIGNED BY: E.ATKINS/P.MILEWSKI
PLOT DATE: 5/5/2006
DRAWN BY: P.MILEWSKI
CHECKED BY: K.ISHIKURA
SHEET 38 OF 99

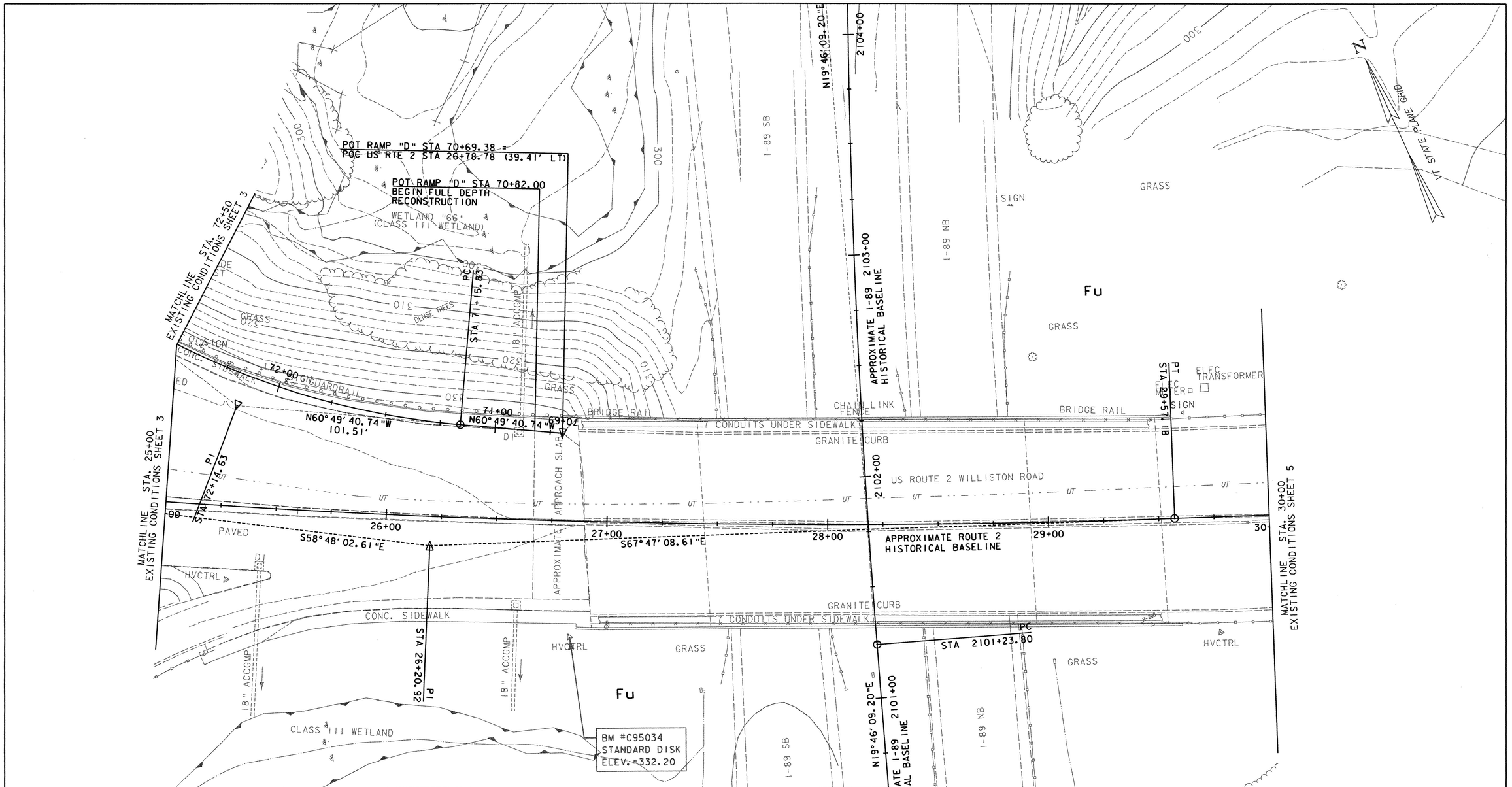

LEGEND

-----------	SOIL TYPE BOUNDARY
——300——	10' INTERVAL CONTOUR
————	2' INTERVAL CONTOUR
————	EXIST. PROPERTY/ROW LINE
(ABAND)	EXIST. ABANDONED UTILITY
(REC)	RECORD INFORMATION

DATUM

VERTICAL NAVD 88
HORIZONTAL NAD 83 (1996)

SOIL LEGEND

SOIL DESIGNATION	HYDROLOGIC SOIL GROUP CLASSIFICATION	SOIL ERODABILITY COEFFICIENTS
AdA = ADAMS AND WINDSOR LOAMY SANDS, 0 TO 5 PERCENT SLOPES	A	0.17 (NOT HIGHLY ERODABLE)
Fu = FILL LAND	NOT RATED	(NOT RATED)
HIB = HARTLAND VERY FINE SANDY LOAM, 2 TO 6 PERCENT SLOPES	B	0.49 (POTENTIALLY HIGHLY ERODABLE)
HID = HARTLAND VERY FINE SANDY LOAM, 12 TO 25 PERCENT SLOPES	B	0.49 (HIGHLY ERODABLE)
VeB = VERGENNES CLAY, 2 TO 6 PERCENT SLOPES	D	0.49 (POTENTIALLY HIGHLY ERODABLE)

EXISTING CONDITIONS PLAN SHEET 4

PROJECT NAME: SOUTH BURLINGTON
PROJECT NUMBER: IM 089-3(37)

FILE NAME: z03al78bdr.dgn
PROJECT LEADER: KEN UPMAL
DESIGNED BY: E.ATKINS/P.MILEWSKI
PLOT DATE: 5/5/2006
DRAWN BY: P.MILEWSKI
CHECKED BY: K.ISHIKURA
SHEET 39 OF 99

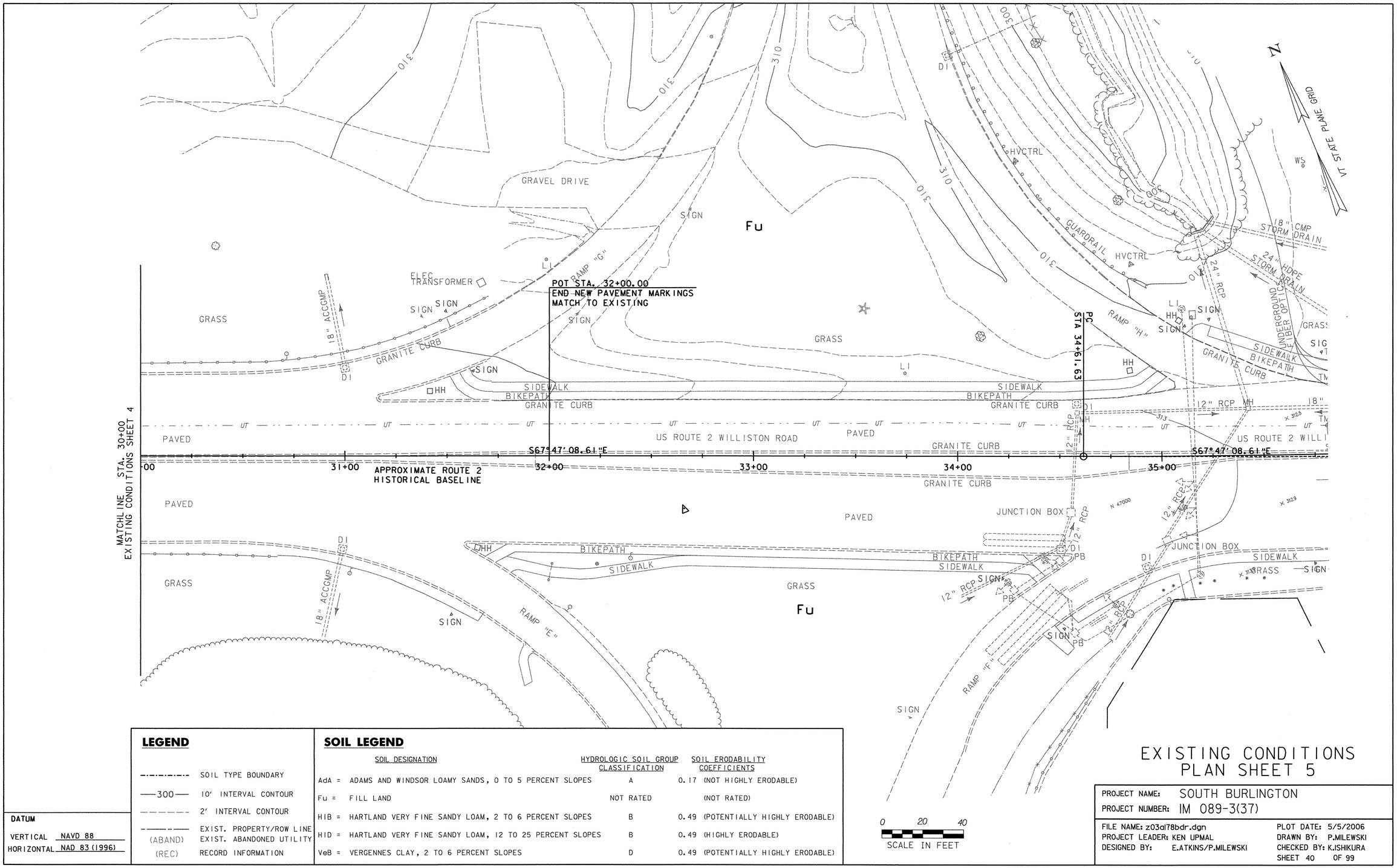

LEGEND

SOIL TYPE BOUNDARY	
300	10' INTERVAL CONTOUR
	2' INTERVAL CONTOUR
(ABAND)	EXIST. PROPERTY/ROW LINE EXIST. ABANDONED UTILITY
(REC)	RECORD INFORMATION

SOIL LEGEND

SOIL DESIGNATION	HYDROLOGIC SOIL GROUP CLASSIFICATION	SOIL ERODABILITY COEFFICIENTS
AdA = ADAMS AND WINDSOR LOAMY SANDS, 0 TO 5 PERCENT SLOPES	A	0.17 (NOT HIGHLY ERODABLE)
Fu = FILL LAND	NOT RATED	(NOT RATED)
HIB = HARTLAND VERY FINE SANDY LOAM, 2 TO 6 PERCENT SLOPES	B	0.49 (POTENTIALLY HIGHLY ERODABLE)
HID = HARTLAND VERY FINE SANDY LOAM, 12 TO 25 PERCENT SLOPES	B	0.49 (HIGHLY ERODABLE)
VeB = VERGENNES CLAY, 2 TO 6 PERCENT SLOPES	D	0.49 (POTENTIALLY HIGHLY ERODABLE)

DATUM

VERTICAL NAVD 88
HORIZONTAL NAD 83 (1996)

0 20 40
SCALE IN FEET

EXISTING CONDITIONS PLAN SHEET 5

PROJECT NAME: SOUTH BURLINGTON
PROJECT NUMBER: IM 089-3(37)

FILE NAME: z03al78bdr.dgn
PROJECT LEADER: KEN UPMAL
DESIGNED BY: E.ATKINS/P.MILEWSKI
PLOT DATE: 5/5/2006
DRAWN BY: P.MILEWSKI
CHECKED BY: K.ISHIKURA
SHEET 40 OF 99

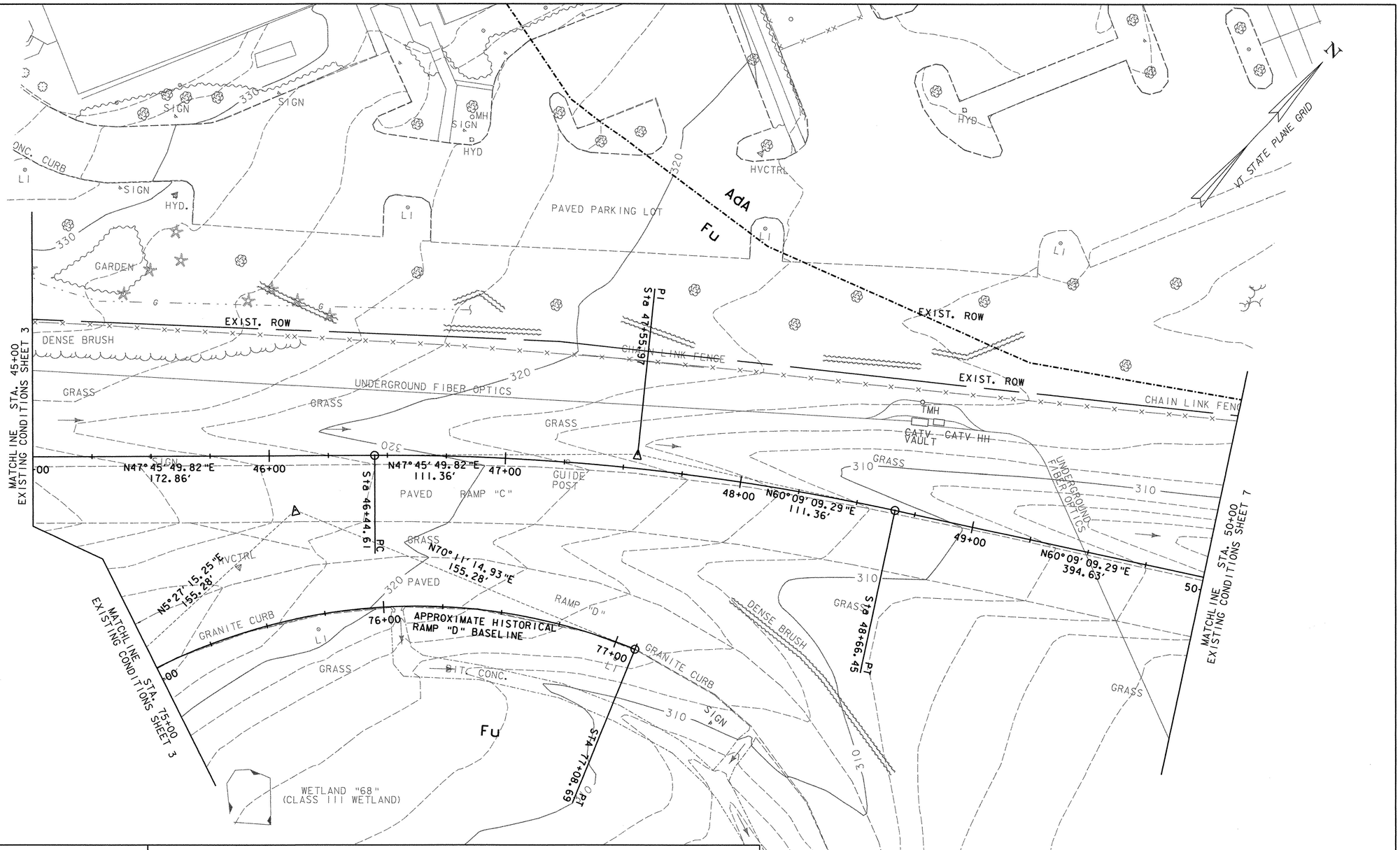

LEGEND

-·-·-·-	SOIL TYPE BOUNDARY
—300—	10' INTERVAL CONTOUR
- - - - -	2' INTERVAL CONTOUR
—·—·—	EXIST. PROPERTY/ROW LINE
(ABAND)	EXIST. ABANDONED UTILITY
(REC)	RECORD INFORMATION

SOIL LEGEND

SOIL DESIGNATION		HYDROLOGIC SOIL GROUP CLASSIFICATION	SOIL ERODABILITY COEFFICIENTS
AdA =	ADAMS AND WINDSOR LOAMY SANDS, 0 TO 5 PERCENT SLOPES	A	0.17 (NOT HIGHLY ERODABLE)
Fu =	FILL LAND	NOT RATED	(NOT RATED)
HIB =	HARTLAND VERY FINE SANDY LOAM, 2 TO 6 PERCENT SLOPES	B	0.49 (POTENTIALLY HIGHLY ERODABLE)
HID =	HARTLAND VERY FINE SANDY LOAM, 12 TO 25 PERCENT SLOPES	B	0.49 (HIGHLY ERODABLE)
VeB =	VERGENNES CLAY, 2 TO 6 PERCENT SLOPES	D	0.49 (POTENTIALLY HIGHLY ERODABLE)

DATUM

VERTICAL NAVD 88
HORIZONTAL NAD 83 (1996)

EXISTING CONDITIONS PLAN SHEET 6

PROJECT NAME: SOUTH BURLINGTON
PROJECT NUMBER: IM 089-3(37)

FILE NAME: z03a178bdr.dgn
PROJECT LEADER: KEN UPMAL
DESIGNED BY: E.ATKINS/P.MILEWSKI
PLOT DATE: 5/5/2006
DRAWN BY: P.MILEWSKI
CHECKED BY: K.ISHIKURA
SHEET 41 OF 99

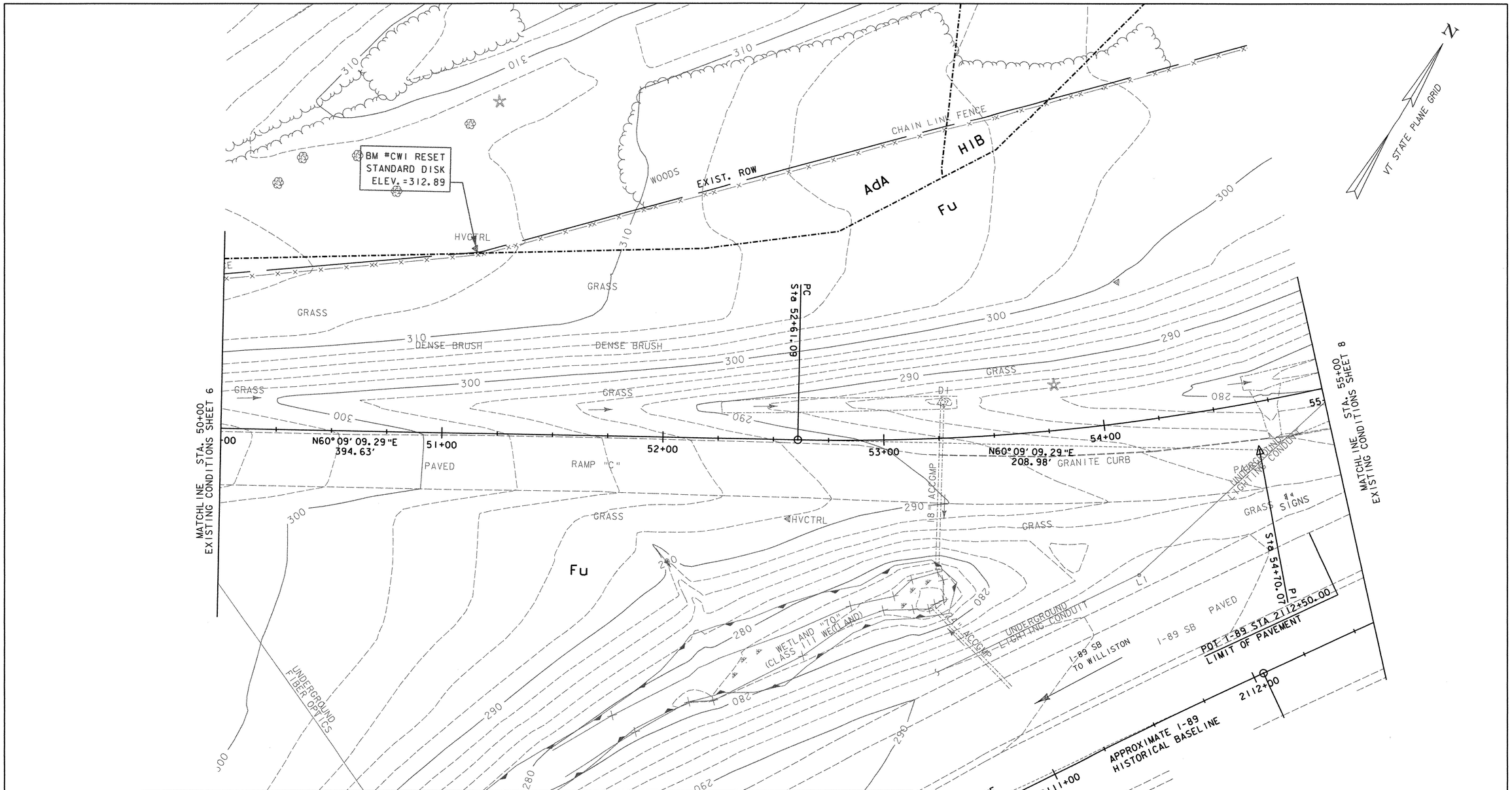

LEGEND

—·—·—	SOIL TYPE BOUNDARY
—300—	10' INTERVAL CONTOUR
— — —	2' INTERVAL CONTOUR
—— —	EXIST. PROPERTY/ROW LINE
(ABAND)	EXIST. ABANDONED UTILITY
(REC)	RECORD INFORMATION

SOIL LEGEND

SOIL DESIGNATION	HYDROLOGIC SOIL GROUP CLASSIFICATION	SOIL ERODABILITY COEFFICIENTS
AdA = ADAMS AND WINDSOR LOAMY SANDS, 0 TO 5 PERCENT SLOPES	A	0.17 (NOT HIGHLY ERODABLE)
Fu = FILL LAND	NOT RATED	(NOT RATED)
HIB = HARTLAND VERY FINE SANDY LOAM, 2 TO 6 PERCENT SLOPES	B	0.49 (POTENTIALLY HIGHLY ERODABLE)
HID = HARTLAND VERY FINE SANDY LOAM, 12 TO 25 PERCENT SLOPES	B	0.49 (HIGHLY ERODABLE)
VeB = VERGENNES CLAY, 2 TO 6 PERCENT SLOPES	D	0.49 (POTENTIALLY HIGHLY ERODABLE)

DATUM

VERTICAL NAVD 88
HORIZONTAL NAD 83 (1996)

EXISTING CONDITIONS PLAN SHEET 7

PROJECT NAME: SOUTH BURLINGTON
PROJECT NUMBER: IM 089-3(37)

FILE NAME: z03a178bdr.dgn
PROJECT LEADER: KEN UPMAL
DESIGNED BY: E.ATKINS/P.MILEWSKI
PLOT DATE: 5/5/2006
DRAWN BY: P.MILEWSKI
CHECKED BY: K.ISHIKURA
SHEET 42 OF 99

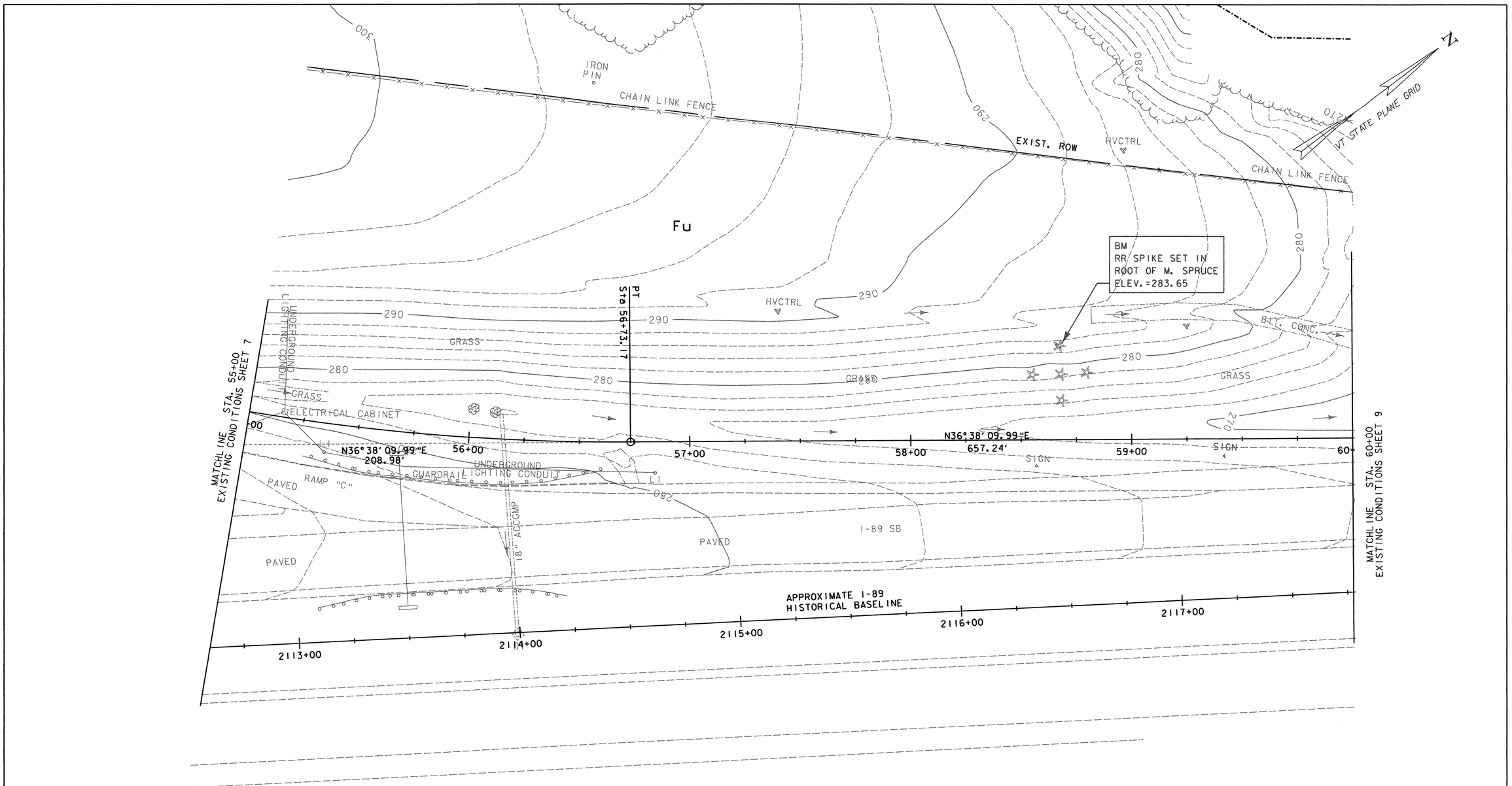

LEGEND

SOIL TYPE BOUNDARY	
300	10' INTERVAL CONTOUR
	2' INTERVAL CONTOUR
	EXIST. PROPERTY/ROW LINE
(ABAND)	EXIST. ABANDONED UTILITY
(REC)	RECORD INFORMATION

SOIL LEGEND

	SOIL DESIGNATION	HYDROLOGIC SOIL GROUP CLASSIFICATION	SOIL ERODABILITY COEFFICIENTS
AdA =	ADAMS AND WINDSOR LOAMY SANDS, 0 TO 5 PERCENT SLOPES	A	0.17 (NOT HIGHLY ERODABLE)
Fu =	FILL LAND	NOT RATED	(NOT RATED)
HIB =	HARTLAND VERY FINE SANDY LOAM, 2 TO 6 PERCENT SLOPES	B	0.49 (POTENTIALLY HIGHLY ERODABLE)
HID =	HARTLAND VERY FINE SANDY LOAM, 12 TO 25 PERCENT SLOPES	B	0.49 (HIGHLY ERODABLE)
VeB =	VERGENNES CLAY, 2 TO 6 PERCENT SLOPES	D	0.49 (POTENTIALLY HIGHLY ERODABLE)

DATUM

VERTICAL NAVD 88

HORIZONTAL NAD 83 (1996)

0 20 40

SCALE IN FEET

EXISTING CONDITIONS PLAN SHEET 8

PROJECT NAME: SOUTH BURLINGTON

PROJECT NUMBER: IM 089-3(37)

FILE NAME: z03d178bdr.dgn
PROJECT LEADER: KEN UPMAL
DESIGNED BY: E.ATKINS/P.MILEWSKI

PLOT DATE: 5/5/2006
DRAWN BY: P.MILEWSKI
CHECKED BY: K.ISHIKURA

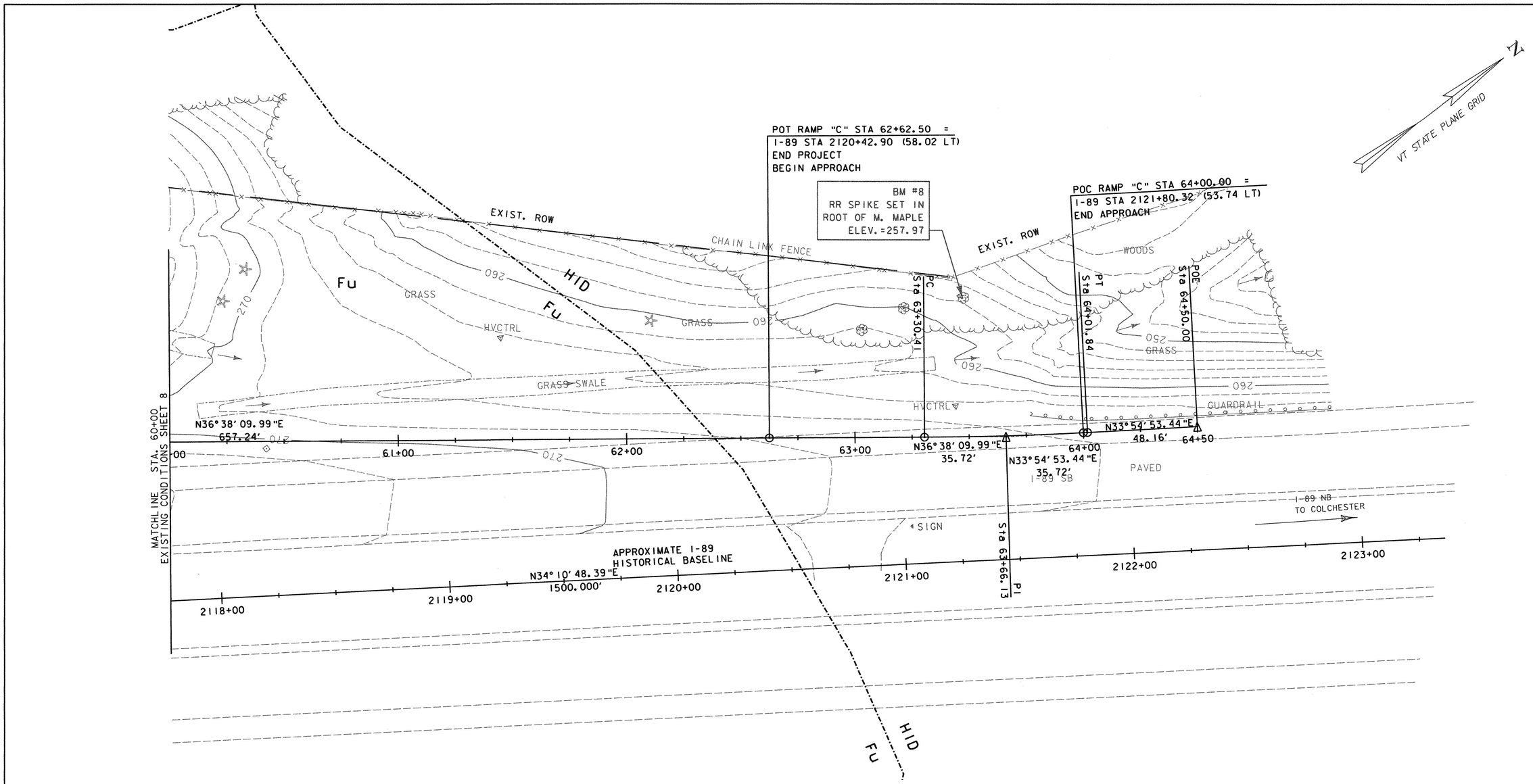

LEGEND

——·——·——	SOIL TYPE BOUNDARY
——300——	10' INTERVAL CONTOUR
————	2' INTERVAL CONTOUR
——— — ———	EXIST. PROPERTY/ROW LINE
(ABAND)	EXIST. ABANDONED UTILITY
(REC)	RECORD INFORMATION

SOIL LEGEND

SOIL DESIGNATION		HYDROLOGIC SOIL GROUP CLASSIFICATION	SOIL ERODABILITY COEFFICIENTS
AdA =	ADAMS AND WINDSOR LOAMY SANDS, 0 TO 5 PERCENT SLOPES	A	0.17 (NOT HIGHLY ERODABLE)
Fu =	FILL LAND	NOT RATED	(NOT RATED)
HIB =	HARTLAND VERY FINE SANDY LOAM, 2 TO 6 PERCENT SLOPES	B	0.49 (POTENTIALLY HIGHLY ERODABLE)
HID =	HARTLAND VERY FINE SANDY LOAM, 12 TO 25 PERCENT SLOPES	B	0.49 (HIGHLY ERODABLE)
VeB =	VERGENNES CLAY, 2 TO 6 PERCENT SLOPES	D	0.49 (POTENTIALLY HIGHLY ERODABLE)

DATUM

VERTICAL NAVD 88
HORIZONTAL NAD 83 (1996)

0 20 40
SCALE IN FEET

EXISTING CONDITIONS PLAN SHEET 9

PROJECT NAME: SOUTH BURLINGTON
PROJECT NUMBER: IM 089-3(37)

FILE NAME: z03al78bdr.dgn
PROJECT LEADER: KEN UPMAL
DESIGNED BY: E.ATKINS/P.MILEWSKI
PLOT DATE: 5/5/2006
DRAWN BY: P.MILEWSKI
CHECKED BY: K.ISHIKURA
SHEET 44 OF 99

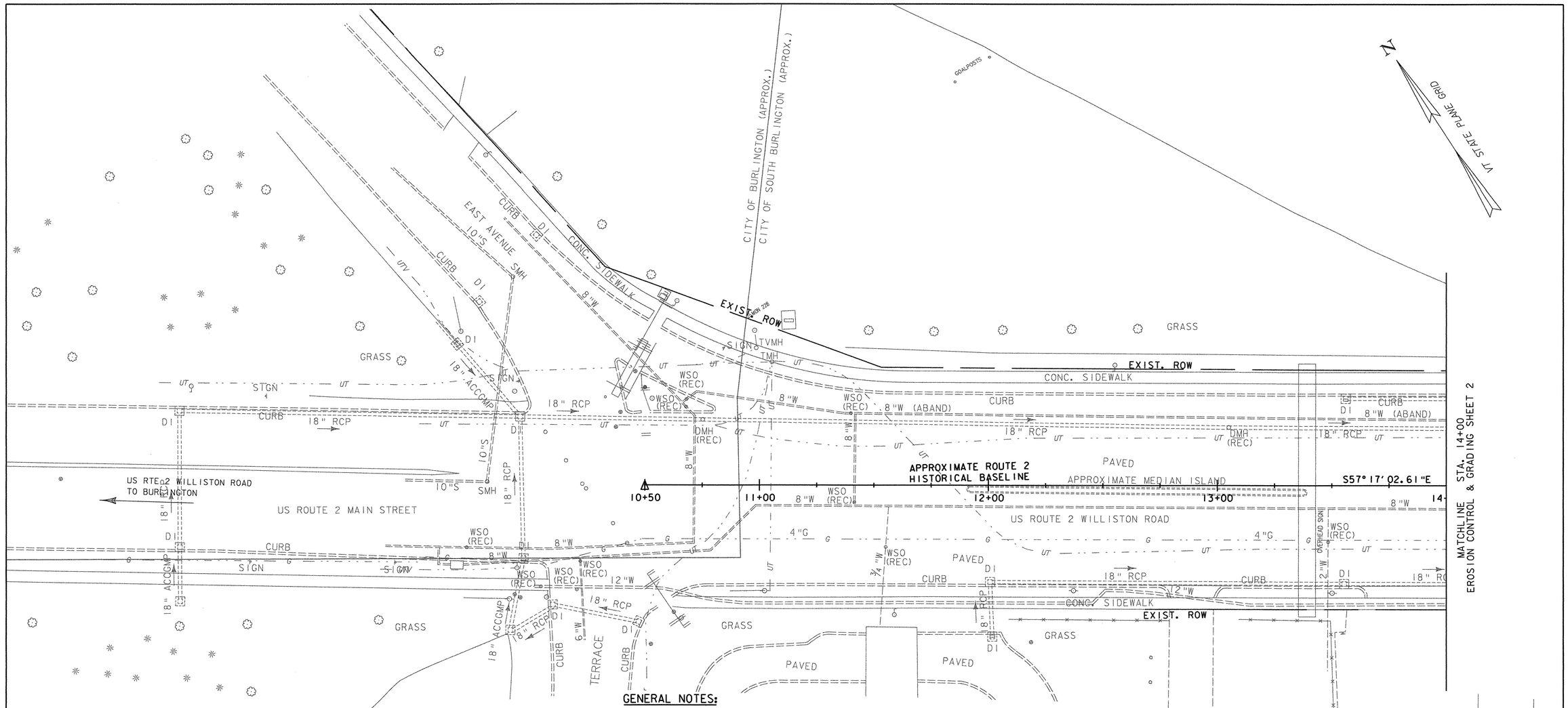

GENERAL NOTES:

1) THE CONTRACTOR SHALL SCHEDULE THE TIME OF SOIL DISTURBANCES SO THAT AS LITTLE DISRUPTION OCCURS AS POSSIBLE AND SO THAT ANY DISTURBANCE CAN BE TEMPORARILY OR PERMANENTLY STABILIZED WITHIN 48 HOURS. TEMPORARY MULCHING SHALL BE DONE FOR ALL AREAS THAT WON'T BE WORKED ON FOR 5 DAYS OR MORE. THE CONTRACTOR SHALL SEED AND MULCH ALL AREAS NOT ANTICIPATED TO BE WORKED ON FOR 21 DAYS OR MORE. THE CONTRACTOR SHALL MINIMIZE ANY SOIL DISTURBANCES BETWEEN OCTOBER 15TH THROUGH MAY 1ST. TO ASSURE A VIGOROUS CATCH OF VEGETATIVE COVER, SEEDING AND MULCHING SHALL BE COMPLETED BY SEPTEMBER 15TH TO THE EXTENT POSSIBLE, OR AS DIRECTED BY THE RESIDENT ENGINEER.

2) THE ON-SITE PLAN COORDINATOR SHALL INSPECT ALL EROSION AND SEDIMENT CONTROL STRUCTURES AND MEASURES AT LEAST ONCE EVERY SEVEN (7) CALENDAR DAYS AND AS SOON AS POSSIBLE BUT NOT MORE THEN 24 HOURS AFTER ANY STORM EVENT.

3) ALL SEDIMENT AND EROSION PREVENTION AND CONTROL MEASURES SHALL BE COMPLETED AND IN PLACE BEFORE THE BEGINNING OF WORK.

4) THE CONTRACTOR SHALL INSTALL PROJECT DEMARCATION FENCING ALONG THE LIMITS OF THE REQUIRED SOIL DISTURBANCE TO PREVENT CONSTRUCTION EQUIPMENT FROM UNNECESSARILY DISTURBING SOIL OR VEGETATION.

5) THE CONTRACTOR SHALL IMMEDIATELY ROUGHEN ALL DISTURBED SOIL SURFACES TO THE SATISFACTION OF THE RESIDENT ENGINEER BY THE USE OF TRACK DRIVEN BULLDOZERS, SHEEPSFOOT ROLLERS OR OTHER APPROVED METHODS.

6) THE CONTRACTOR SHALL APPLY DUST CONTROL MEASURES OVER EXPOSED SURFACES NOT INTENDED TO BE VEGETATED.

7) PRIOR TO THE START OF WORK, WRAP NON-WOVEN GEOTEXTILE FILTER FABRIC OVER ALL CATCH BASIN GRATES IN AREAS SUBJECT TO TRAFFIC WITHIN THE LIMIT OF WORK. PROVIDE ENOUGH OVERLAP IN FABRIC TO ALLOW THE MATERIAL TO SET BETWEEN THE GRATE AND THE FRAME, USING THE WEIGHT OF THE GRATE TO HOLD THE FABRIC IN PLACE.

ON-SITE PLAN COORDINATOR

NAME	TITLE	PHONE #

EROSION CONTROL LEGEND

- INLET PROTECTION (SEE DETAIL SHEETS FOR APPROPRIATE METHOD)
- TEMPORARY STONE CHECK DAM
- SILT FENCE
- PDF——PDF PROJECT DEMARCATION FENCING (LIMIT OF DISTURBANCE)
- x—x—x— FILTER CURTAIN
- —300— PROPOSED 10' INTERVAL CONTOUR
- ---------- PROPOSED 2' INTERVAL CONTOUR
- STONE DITCH
- DITCH W/ EROSION MATTING
- STABILIZED CONST. ENTRANCE

DATUM

VERTICAL NAVD 88

HORIZONTAL NAD 83 (1996)

0 20 40

SCALE IN FEET

EROSION CONTROL & GRADING LAYOUT SHEET 1

PROJECT NAME: SOUTH BURLINGTON

PROJECT NUMBER: IM 089-3(37)

FILE NAME: z03al78bdr.dgn
PROJECT LEADER: KEN UPMAL
DESIGNED BY: E.ATKINS/P.MILEWSKI

PLOT DATE: 5/5/2006
DRAWN BY: P.MILEWSKI
CHECKED BY: K.ISHIKURA

SEED
RAMP "C" 41+40 LT ~ 41+67 LT

SEED ~ WINTER RYE
RAMP "C" 41+46 LT ~ 41+67 LT

HAY MULCH
RAMP "C" 41+46 LT ~ 41+67 LT

GEOTEXTILE FABRIC FOR FILTERS
EXIST. DI 39+44.2 LT (8 S.F.)
EXIST. DI 40+46.6 LT (8 S.F.)

POT US ROUTE 2 STA. 15+75.00
BEGIN NEW PAVEMENT MARKINGS

POT RAMP "C" STA 39+75.00 =
RT. 2 STA 18+07.76 (32.92 LT)
BEGIN APPROACH

POT RAMP "C" STA 41+12.50
END APPROACH
BEGIN PROJECT
IM 089-3(37)

PC STA 16+98.27

PI STA 18+49.94

APPROXIMATE ROUTE 2
HISTORICAL BASELINE

LIMITS OF COLD PLANE AND OVERLAY

US ROUTE 2 WILLISTON ROAD

SHOPPING PLAZA PARKING LOT

VT STATE PLANE GRID N

MATCHLINE STA. 14+00 EROSION CONTROL & GRADING SHEET 1

MATCHLINE STA. 20+00 EROSION CONTROL & GRADING SHEET 3

0 20 40
SCALE IN FEET

EROSION CONTROL LEGEND

- INLET PROTECTION (SEE DETAIL SHEETS FOR APPROPRIATE METHOD)
- TEMPORARY STONE CHECK DAM
- SILT FENCE
- PDF PROJECT DEMARCATION FENCING (LIMIT OF DISTURBANCE) PDF
- FILTER CURTAIN
- 300 PROPOSED 10' INTERVAL CONTOUR
- PROPOSED 2' INTERVAL CONTOUR
- STONE DITCH
- DITCH W/ EROSION MATTING
- STABILIZED CONST. ENTRANCE

DATUM
VERTICAL NAVD 88
HORIZONTAL NAD 83 (1996)

EROSION CONTROL & GRADING LAYOUT SHEET 2

PROJECT NAME: SOUTH BURLINGTON
PROJECT NUMBER: IM 089-3(37)

FILE NAME: z03al78bdr.dgn
PROJECT LEADER: KEN UPMAL
DESIGNED BY: E.ATKINS/P.MILEWSKI
PLOT DATE: 5/5/2006
DRAWN BY: P.MILEWSKI
CHECKED BY: K.ISHIKURA
SHEET 46 OF 99

STONE FILL, TYPE I(MOD. - CONSTRUCTION ENTRANCE)

RAMP "D" 75+04 LT (STABILIZED CONSTRUCTION ENTRANCE)

GEOTEXTILE FOR ROADBED SUBGRADE SEPARATOR

RAMP "D" 75+04 LT (STABILIZED CONSTRUCTION ENTRANCE)

STONE FILL, TYPE I(MOD. - INLET PROTECTION)

EXIST. DI@ RAMP "C" 44+75.9 LT
PROP. DI@ RAMP "C" 44+76.8 LT

SNOW FENCE (MOD. - PDF)

RAMP "C" 41+71LT ~ 45+00 LT
RAMP "D" 72+50 RT ~ 75+00 RT

GEOTEXTILE FOR SILT FENCE

RAMP "D" 72+50 RT ~ 72+91RT
RAMP "D" 72+97 RT ~ 75+00 RT

GEOTEXTILE FABRIC FOR FILTERS

EXIST. DI@ RAMP "C" 42+52.1RT (8 S.F. INLET PROTECTION)
EXIST. DI@ US ROUTE 2 22+83.8 LT (8 S.F. INLET PROTECTION)
EXIST. DI@ US ROUTE 2 24+69.6 LT (8 S.F. INLET PROTECTION)
EXIST. DI@ RAMP "D" 73+54.3 LT (8 S.F. INLET PROTECTION)
PROP. DI@ RAMP "C" 42+14.0 LT (8 S.F. INLET PROTECTION)
PROP. DI@ RAMP "C" 42+69.6 RT (8 S.F. INLET PROTECTION)
PROP. DI@ US ROUTE 2 22+84.5 LT (8 S.F. INLET PROTECTION)
EACH PROP. DI@ RAMP "D" 72+63.5 LT (16 S.F. INLET PROTECTION)
PROP. DI@ RAMP "D" 73+54.0 LT (8 S.F. INLET PROTECTION)

EROSION MATTING

RAMP "C" 44+50 ~ 45+00 LT (GRASS CHANNEL)
RAMP "D" 73+90 ~ 75+00 RT (SLOPE STABILIZATION)
RAMP "D" 73+90 ~ 74+55 LT (SLOPE STABILIZATION)
RAMP "D" 74+78 ~ 75+00 RT (GRASS CHANNEL)

SEED

RAMP "C" 41+67 LT ~ 45+00 LT
RAMP "C" 42+87 RT ~ 45+00 RT
RAMP "D" 72+50 LT ~ 75+00 LT
RAMP "D" 72+50 RT ~ 75+00 RT
US ROUTE 2 21+28 LT ~ 24+83 LT

SEED - WINTER RYE

RAMP "C" 41+67 LT ~ 45+00 LT
RAMP "C" 42+87 RT ~ 45+00 RT
RAMP "D" 72+50 LT ~ 75+00 LT
RAMP "D" 72+50 RT ~ 75+00 RT
US ROUTE 2 21+28 LT ~ 24+83 LT

HAY MULCH

RAMP "C" 41+67 LT ~ 45+00 LT
RAMP "C" 42+87 RT ~ 45+00 RT
RAMP "D" 72+50 LT ~ 75+00 LT
RAMP "D" 72+50 RT ~ 75+00 RT
US ROUTE 2 21+28 LT ~ 24+83 LT

MATCHLINE STA. 45+00
EROSION CONTROL & GRADING SHEET 6

MATCHLINE STA. 75+00
EROSION CONTROL & GRADING SHEET 6

MATCHLINE STA. 20+00
EROSION CONTROL & GRADING SHEET 2

MATCHLINE STA. 25+00
EROSION CONTROL & GRADING SHEET 4

MATCHLINE STA. 72+50
EROSION CONTROL & GRADING SHEET 4

PROP. GRASS CHANNEL
SLOPE=0.014FT/FT (MAX)

SPILL ELEV.=
317.3+/-

POC STA 75+00.00
END APPROACH
RAMP "D"

AREA OF PERMANET
WATER DEPTH OF 6" OR LESS

ELEV.=314.0+/-

TOP OF 6' WIDE BERM
ELEV.=318.33

POC STA 74+00.00
END FULL DEPTH
RECONSTRUCTION RAMP
BEGIN APPROACH
RAMP "D"

PC
STA 22+83.29

PT
STA 20+01.16

POT STA 21+05.10
BEGIN WIDENING
US RTE 2

POC STA 24+83.30
END WIDENING
US RTE 2

LIMITS OF COLD PLANE
AND OVERLAY

APPROXIMATE ROUTE 2
HISTORICAL BASELINE

US ROUTE 2 WILLISTON ROAD

WETLAND "69"
(CLASS III
WETLAND)

EXIST. ROW

RAMP "C"

RAMP "D"

RAMP "A"

CHAIN LINK FENCE

GRANITE CURB

PAVED

GRASS

CONC. SIDEWALK

PAVED BIKEPATH

UNDERGROUND
FIBER OPTICS

18" RCP

18" ACCOMP

12"W

8"W

SIGN

GUIDE
POST

DI

MH

HVCTRL

HYD

N

VT STATE PLANE GRID

0 20 40
SCALE IN FEET

EROSION CONTROL LEGEND

- INLET PROTECTION (SEE DETAIL SHEETS FOR APPROPRIATE METHOD)
- TEMPORARY STONE CHECK DAM
- SILT FENCE
- PDF——PDF PROJECT DEMARCATION FENCING (LIMIT OF DISTURBANCE)
- ×—×—×— FILTER CURTAIN
- —300— PROPOSED 10' INTERVAL CONTOUR
- ---------- PROPOSED 2' INTERVAL CONTOUR
- STONE DITCH
- DITCH W/ EROSION MATTING
- STABILIZED CONST. ENTRANCE

DATUM

VERTICAL NAVD 88
HORIZONTAL NAD 83 (1996)

EROSION CONTROL & GRADING LAYOUT SHEET 3

PROJECT NAME: SOUTH BURLINGTON
PROJECT NUMBER: IM 089-3(37)

FILE NAME: z03al78bdr.dgn
PROJECT LEADER: KEN UPMAL
DESIGNED BY: E.ATKINS/P.MILEWSKI
PLOT DATE: 5/5/2006
DRAWN BY: P.MILEWSKI
CHECKED BY: K.ISHIKURA
SHEET 47 OF 99

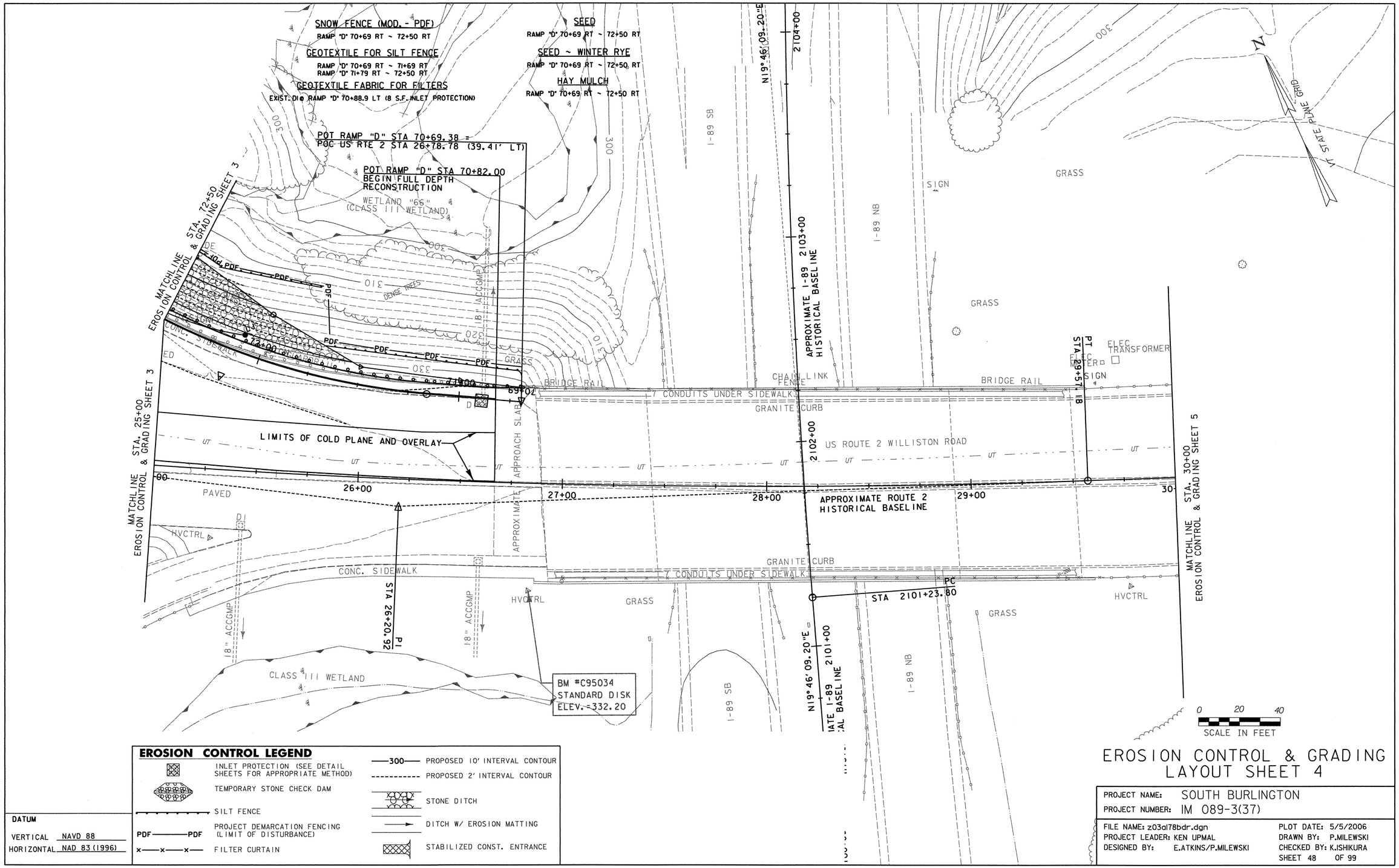

EROSION CONTROL LEGEND

- INLET PROTECTION (SEE DETAIL SHEETS FOR APPROPRIATE METHOD)
- TEMPORARY STONE CHECK DAM
- SILT FENCE
- PDF——PDF PROJECT DEMARCATION FENCING (LIMIT OF DISTURBANCE)
- ×—×—× FILTER CURTAIN
- 300 PROPOSED 10' INTERVAL CONTOUR
- PROPOSED 2' INTERVAL CONTOUR
- STONE DITCH
- DITCH W/ EROSION MATTING
- STABILIZED CONST. ENTRANCE

DATUM

VERTICAL NAVD 88
HORIZONTAL NAD 83 (1996)

EROSION CONTROL & GRADING LAYOUT SHEET 4

PROJECT NAME: SOUTH BURLINGTON
PROJECT NUMBER: IM 089-3(37)

FILE NAME: z03al78bdr.dgn
PROJECT LEADER: KEN UPMAL
DESIGNED BY: E.ATKINS/P.MILEWSKI
PLOT DATE: 5/5/2006
DRAWN BY: P.MILEWSKI
CHECKED BY: K.ISHIKURA
SHEET 48 OF 99

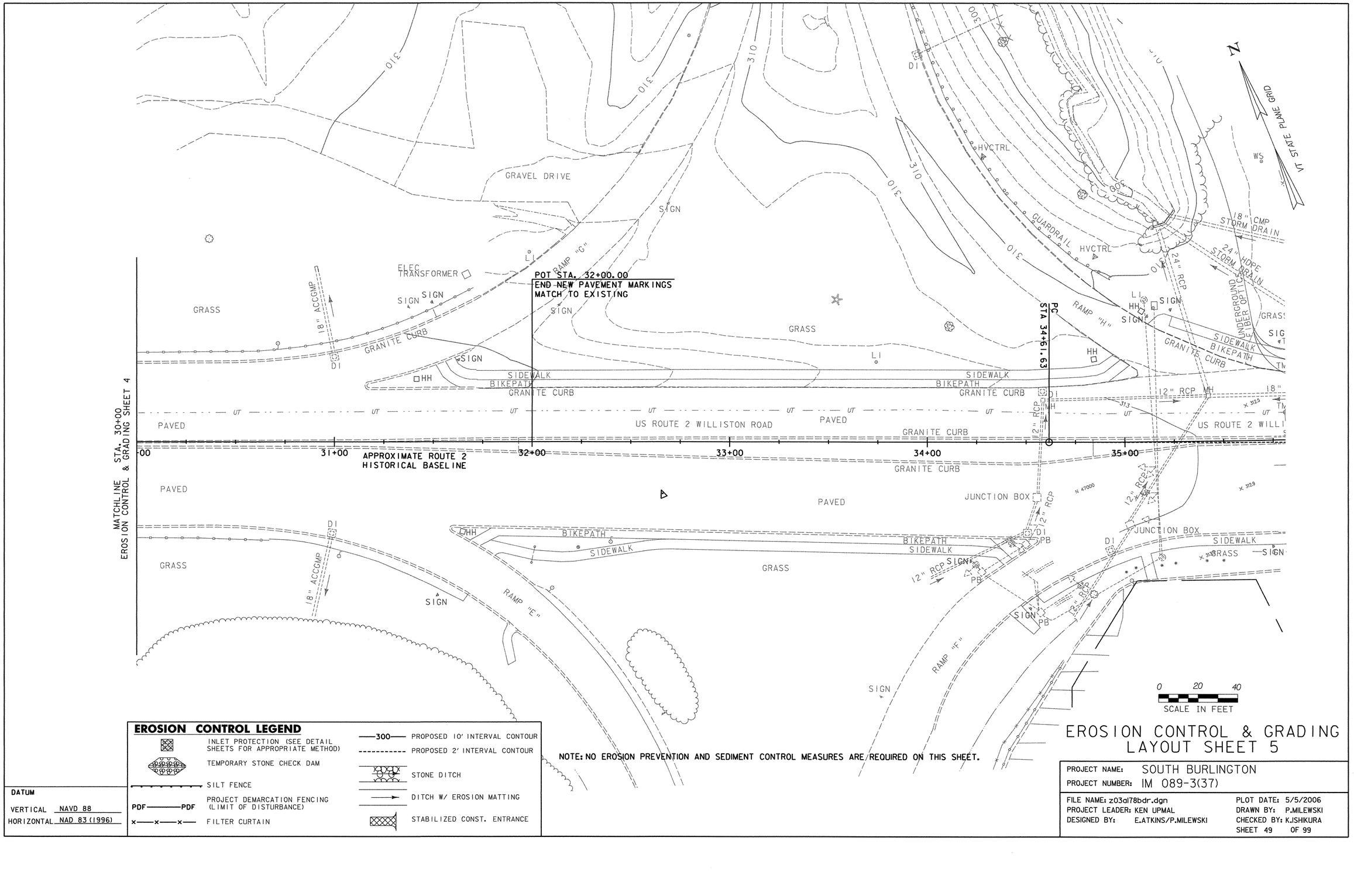

EROSION CONTROL LEGEND

- INLET PROTECTION (SEE DETAIL SHEETS FOR APPROPRIATE METHOD)
- TEMPORARY STONE CHECK DAM
- SILT FENCE
- PROJECT DEMARCATION FENCING (LIMIT OF DISTURBANCE) — PDF ——— PDF
- FILTER CURTAIN
- 300 PROPOSED 10' INTERVAL CONTOUR
- PROPOSED 2' INTERVAL CONTOUR
- STONE DITCH
- DITCH W/ EROSION MATTING
- STABILIZED CONST. ENTRANCE

NOTE: NO EROSION PREVENTION AND SEDIMENT CONTROL MEASURES ARE REQUIRED ON THIS SHEET.

DATUM

VERTICAL NAVD 88
HORIZONTAL NAD 83 (1996)

EROSION CONTROL & GRADING LAYOUT SHEET 5

PROJECT NAME: SOUTH BURLINGTON
PROJECT NUMBER: IM 089-3(37)

FILE NAME: z03al78bdr.dgn
PROJECT LEADER: KEN UPMAL
DESIGNED BY: E.ATKINS/P.MILEWSKI
PLOT DATE: 5/5/2006
DRAWN BY: P.MILEWSKI
CHECKED BY: K.ISHIKURA
SHEET 49 OF 99

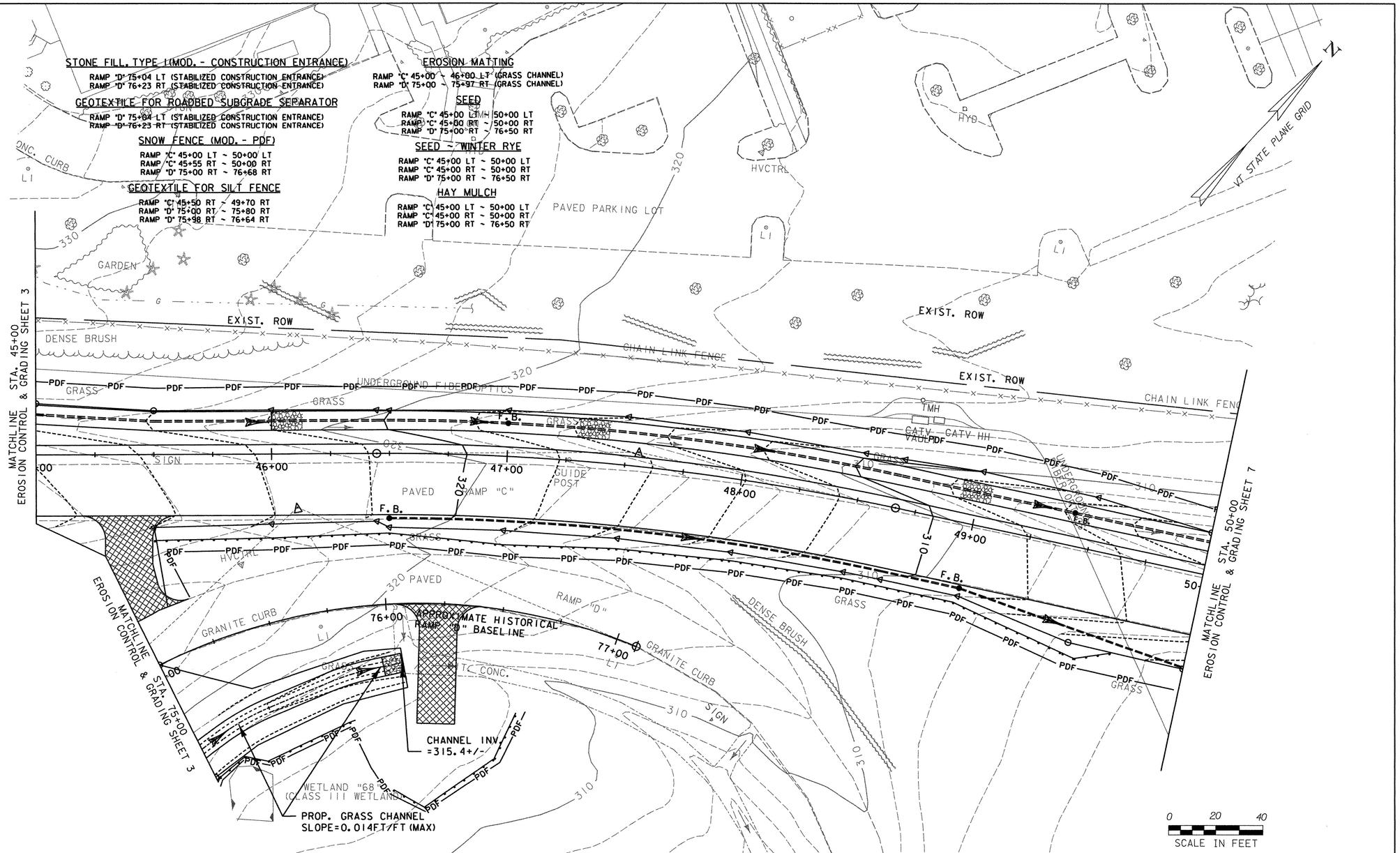

EROSION CONTROL & GRADING LAYOUT SHEET 6

EROSION CONTROL LEGEND

- INLET PROTECTION (SEE DETAIL SHEETS FOR APPROPRIATE METHOD)
- TEMPORARY STONE CHECK DAM
- SILT FENCE
- PDF——PDF PROJECT DEMARCATION FENCING (LIMIT OF DISTURBANCE)
- x——x——x FILTER CURTAIN
- —300— PROPOSED 10' INTERVAL CONTOUR
- PROPOSED 2' INTERVAL CONTOUR
- STONE DITCH
- DITCH W/ EROSION MATTING
- STABILIZED CONST. ENTRANCE

DATUM	
VERTICAL	NAVD 88
HORIZONTAL	NAD 83 (1996)

PROJECT NAME:	SOUTH BURLINGTON
PROJECT NUMBER:	IM 089-3(37)
FILE NAME: z03a178bdr.dgn	PLOT DATE: 5/5/2006
PROJECT LEADER: KEN UPMAL	DRAWN BY: P.MILEWSKI
DESIGNED BY: E.ATKINS/P.MILEWSKI	CHECKED BY: K.ISHIKURA
	SHEET 50 OF 99

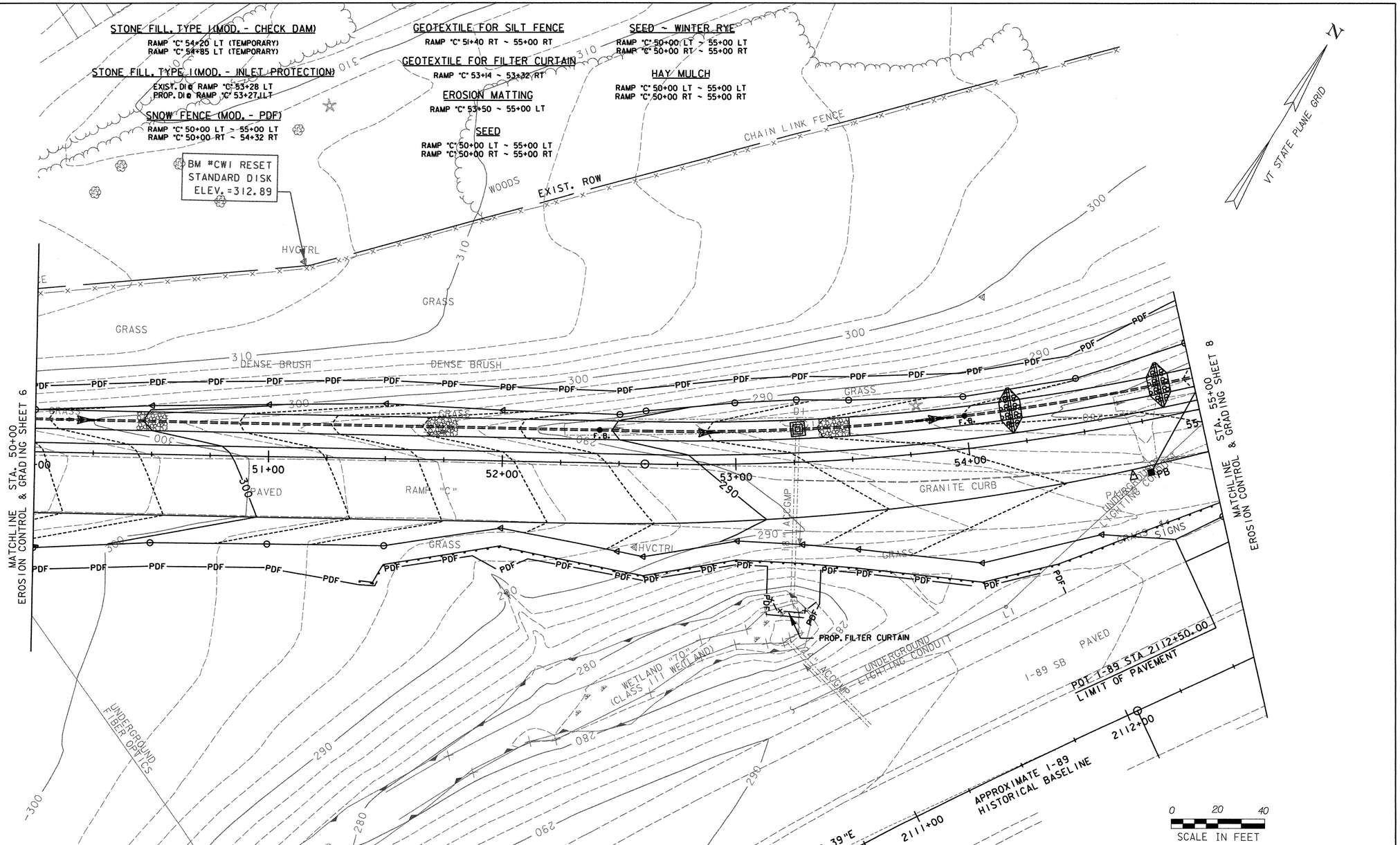

EROSION CONTROL LEGEND

- INLET PROTECTION (SEE DETAIL SHEETS FOR APPROPRIATE METHOD)
- TEMPORARY STONE CHECK DAM
- SILT FENCE
- PDF——PDF PROJECT DEMARCATION FENCING (LIMIT OF DISTURBANCE)
- x——x——x— FILTER CURTAIN
- —300— PROPOSED 10' INTERVAL CONTOUR
- PROPOSED 2' INTERVAL CONTOUR
- STONE DITCH
- DITCH W/ EROSION MATTING
- STABILIZED CONST. ENTRANCE

DATUM

VERTICAL NAVD 88

HORIZONTAL NAD 83 (1996)

EROSION CONTROL & GRADING LAYOUT SHEET 7

PROJECT NAME: SOUTH BURLINGTON

PROJECT NUMBER: IM 089-3(37)

FILE NAME: z03a178bdr.dgn

PROJECT LEADER: KEN UPMAL

DESIGNED BY: E.ATKINS/P.MILEWSKI

PLOT DATE: 5/5/2006

DRAWN BY: P.MILEWSKI

CHECKED BY: K.ISHIKURA

SHEET 51 OF 99

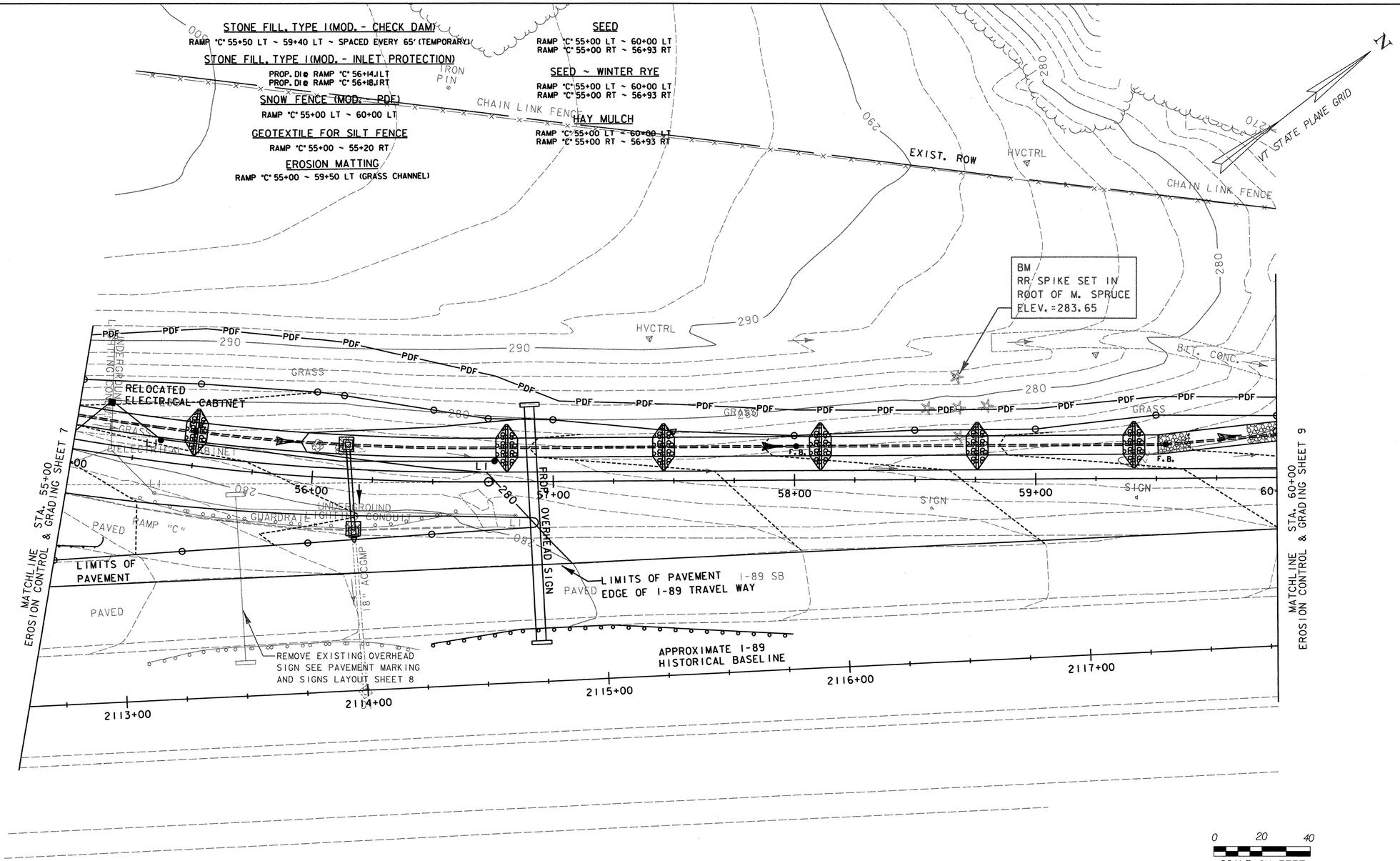

EROSION CONTROL & GRADING LAYOUT SHEET 8

EROSION CONTROL LEGEND

- INLET PROTECTION (SEE DETAIL SHEETS FOR APPROPRIATE METHOD)
- TEMPORARY STONE CHECK DAM
- SILT FENCE
- PDF——PDF PROJECT DEMARCATION FENCING (LIMIT OF DISTURBANCE)
- x——x——x— FILTER CURTAIN
- —300— PROPOSED 10' INTERVAL CONTOUR
- PROPOSED 2' INTERVAL CONTOUR
- STONE DITCH
- DITCH W/ EROSION MATTING
- STABILIZED CONST. ENTRANCE

DATUM

VERTICAL NAVD 88

HORIZONTAL NAD 83 (1996)

PROJECT NAME: SOUTH BURLINGTON

PROJECT NUMBER: IM 089-3(37)

FILE NAME: z03a178bdr.dgn

PROJECT LEADER: KEN UPMAL

DESIGNED BY: E.ATKINS/P.MILEWSKI

PLOT DATE: 5/5/2006

DRAWN BY: P.MILEWSKI

CHECKED BY: K.ISHIKURA

SHEET 52 OF 99

SNOW FENCE (MOD. - PDF)
RAMP "C" 60+00 LT ~ 64+00 LT

GEOTEXTILE FOR SILT FENCE
RAMP "C" 61+25 LT ~ 64+25 LT

SEED
RAMP "C" 60+00 LT ~ 63+50 LT

SEED ~ WINTER RYE
RAMP "C" 60+00 LT ~ 63+50 LT

HAY MULCH
RAMP "C" 60+00 LT ~ 63+50 LT

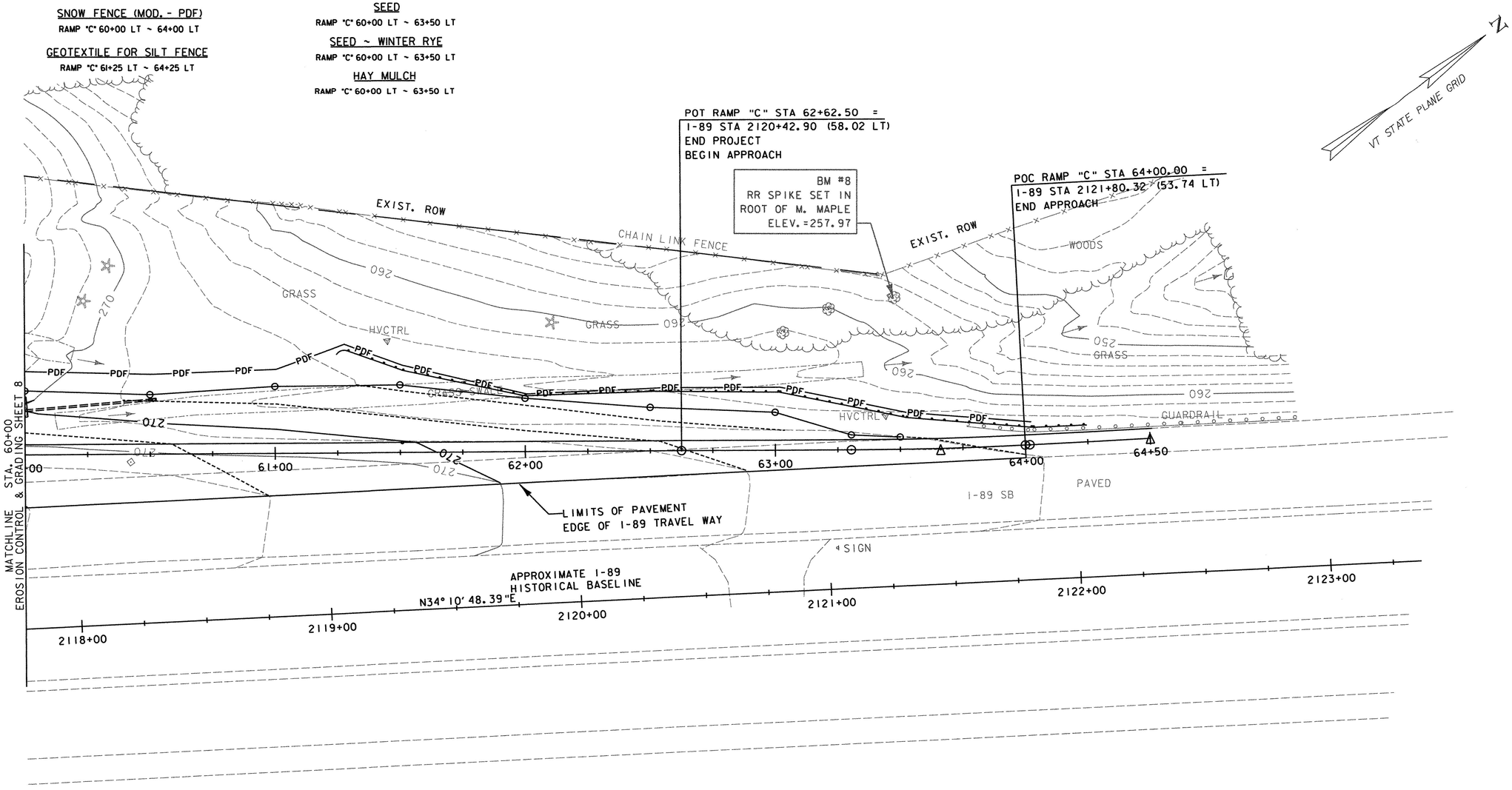

0 20 40
SCALE IN FEET

EROSION CONTROL LEGEND

- INLET PROTECTION (SEE DETAIL SHEETS FOR APPROPRIATE METHOD)
- TEMPORARY STONE CHECK DAM
- SILT FENCE
- PDF——PDF PROJECT DEMARCATION FENCING (LIMIT OF DISTURBANCE)
- x—x—x— FILTER CURTAIN
- 300 PROPOSED 10' INTERVAL CONTOUR
- PROPOSED 2' INTERVAL CONTOUR
- STONE DITCH
- DITCH W/ EROSION MATTING
- STABILIZED CONST. ENTRANCE

DATUM

VERTICAL NAVD 88
HORIZONTAL NAD 83 (1996)

EROSION CONTROL & GRADING LAYOUT SHEET 9

PROJECT NAME: SOUTH BURLINGTON
PROJECT NUMBER: IM 089-3(37)

FILE NAME: z03al78bdr.dgn
PROJECT LEADER: KEN UPMAL
DESIGNED BY: E.ATKINS/P.MILEWSKI
PLOT DATE: 5/5/2006
DRAWN BY: P.MILEWSKI
CHECKED BY: K.ISHIKURA
SHEET 53 OF 99

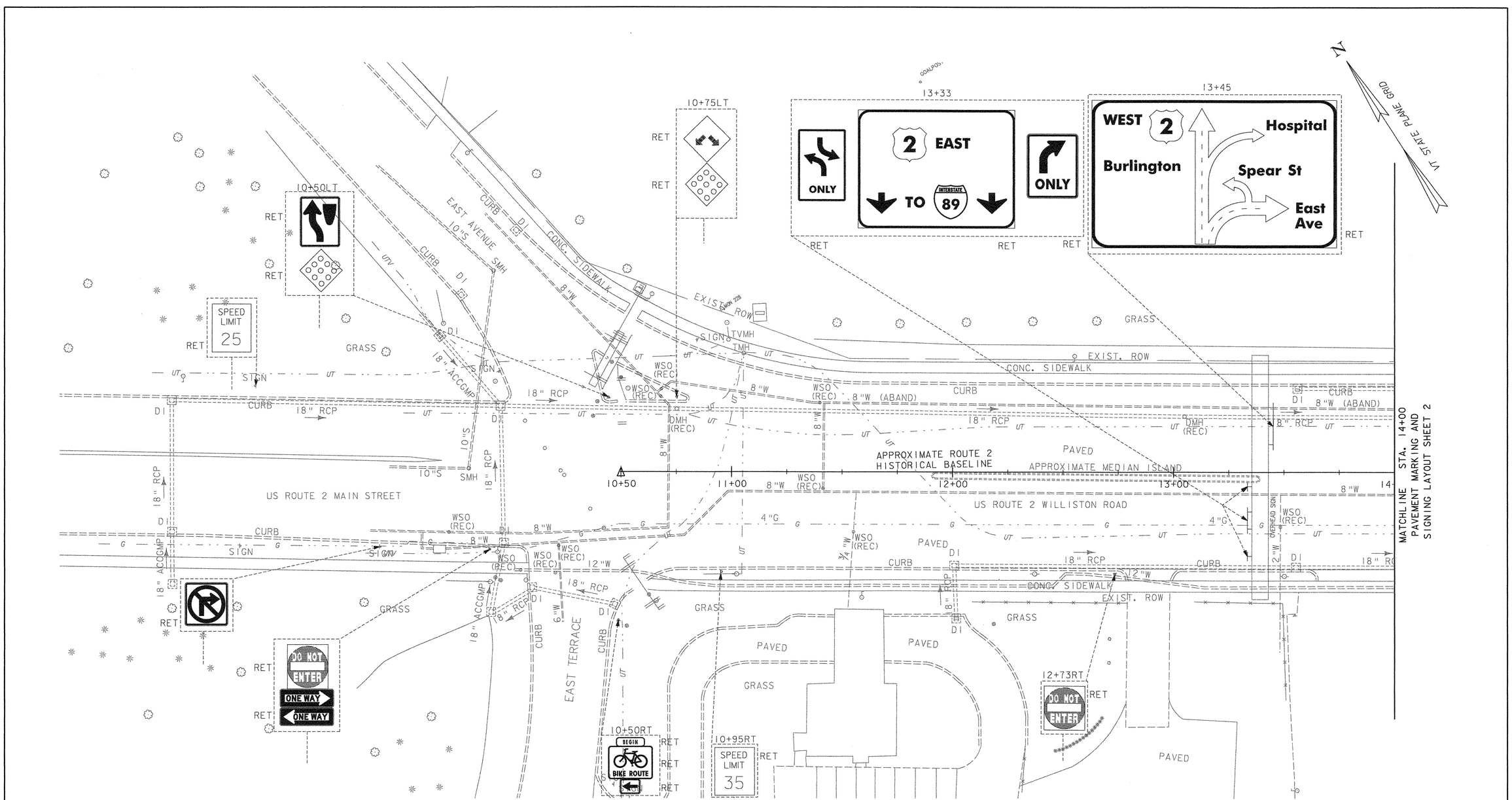

0 20 40
SCALE IN FEET

DATUM

VERTICAL NAVD 88

HORIZONTAL NAD 83 (1996)

SIGN LEGEND

- = EXISTING SIGN
- = NEW SIGN
- R = REMOVE EXISTING SIGN AND POST
- R+S = SALVAGE SIGN AND RELOCATE TO NOTED LOCATION WITH NEW SIGN POST. REMOVE AND DISPOSE EXISTING SIGN POST
- N = NEW
- RET = RETAIN AT EXISTING LOCATION
- B-B = BACK TO BACK

PAVEMENT MARKING AND SIGNING LAYOUT SHEET 1

PROJECT NAME: SOUTH BURLINGTON
PROJECT NUMBER: IM 089-3(37)

FILE NAME: z03al78pmbdr.dgn
PROJECT LEADER: KEN UPMAL
DESIGNED BY: V.KACOYANNAKIS

PLOT DATE: 5/5/2006
DRAWN BY: V.KACOYANNAKIS
CHECKED BY: J.FORD
SHEET 54 OF 99

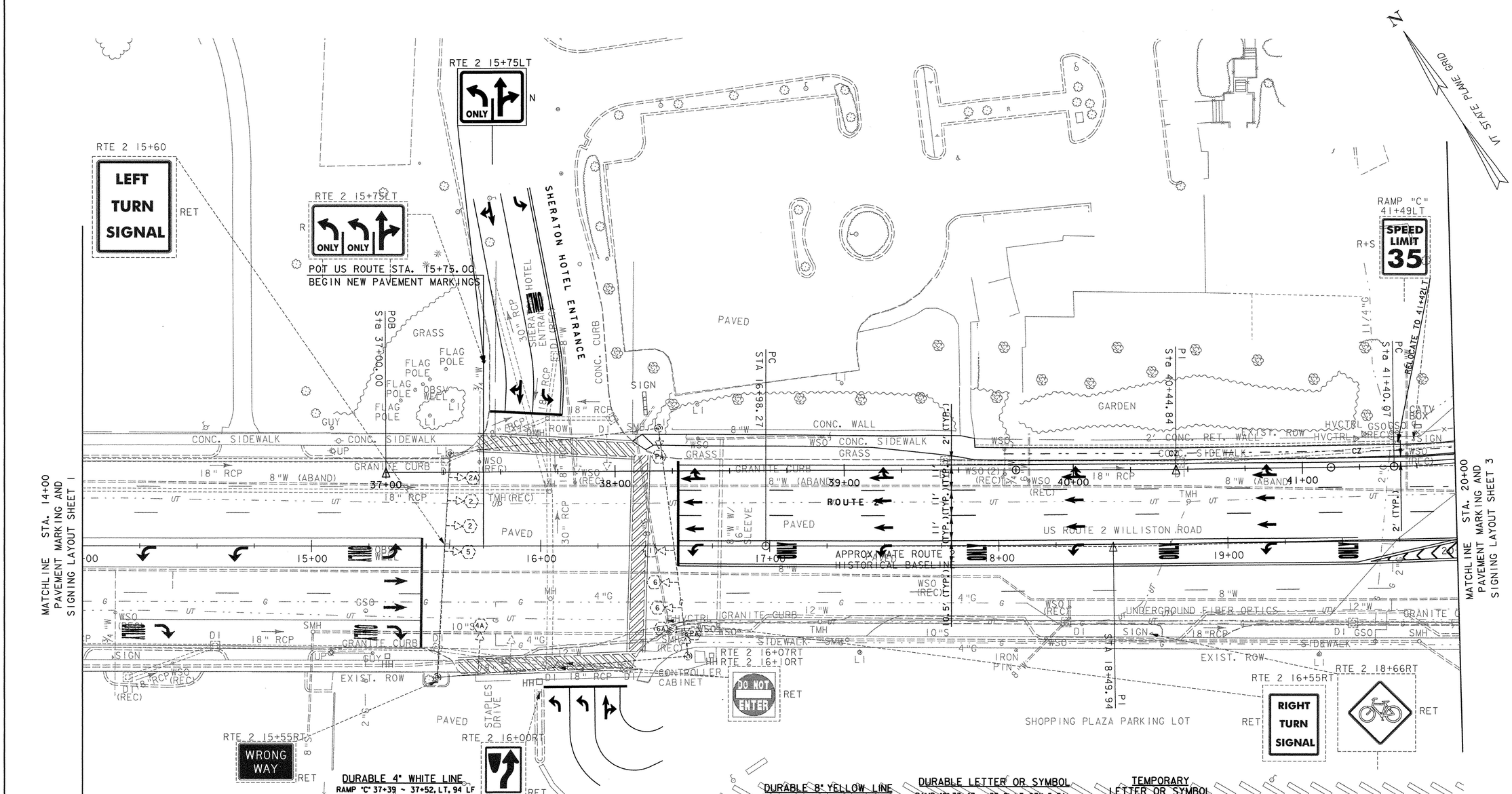

0 20 40
SCALE IN FEET

DATUM
VERTICAL NAVD 88
HORIZONTAL NAD 83 (1996)

SIGN LEGEND

- = EXISTING SIGN
- = NEW SIGN
- R = REMOVE EXISTING SIGN AND POST
- R+S = SALVAGE SIGN AND RELOCATE TO NOTED LOCATION WITH NEW SIGN POST, REMOVE AND DISPOSE EXISTING SIGN POST
- N = NEW
- RET = RETAIN AT EXISTING LOCATION
- B-B = BACK TO BACK

DURABLE 4" WHITE LINE
RAMP "C" 37+39 ~ 37+52, LT, 94 LF
RAMP "C" 37+50 ~ 37+64, LT, 97 LF
RAMP "C" 37+80 ~ 37+93, RT, 48 LF
RAMP "C" 37+91 ~ 38+20, RT, 59 LF
RAMP "C" 38+02 ~ 38+20, RT, 34 LF
RAMP "C" 38+27 ~ 41+67, LT, 340 LF
RAMP "C" 38+27 ~ 41+24, RT, 297 LF
RAMP "C" 38+27 ~ 41+67, RT, 9 X 10' = 90 LF
RAMP "C" 38+27 ~ 41+67, RT, 9 X 10' = 90 LF

TEMPORARY 4" WHITE LINE
RAMP "C" 38+27 ~ 41+67, LT, 340 LF
RAMP "C" 38+27 ~ 41+24, RT, 297 LF
RAMP "C" 38+27 ~ 41+67, RT, 9 X 10' = 90 LF
RAMP "C" 38+27 ~ 41+67, RT, 9 X 10' = 90 LF

DURABLE 4" YELLOW LINE
RAMP "C" 38+27 ~ 41+23, RT, 296' X 2 LINES = 592 LF
RAMP "C" 41+23 ~ 41+67, RT, 44' X 2 LINES = 88 LF
RAMP "C" 41+23 ~ 41+67, RT, 44' X 2 LINES = 88 LF
RAMP "C" 37+62 ~ 37+77 LT, 99' X 2 LINES = 198 LF

TEMPORARY 4" YELLOW LINE
RAMP "C" 38+27 ~ 41+23, RT, 296' X 2 LINES = 592 LF
RAMP "C" 41+23 ~ 41+67, RT, 44' X 2 LINES = 88 LF
RAMP "C" 41+23 ~ 41+67, RT, 44' X 2 LINES = 88 LF

DURABLE 8" YELLOW LINE
RAMP "C" 41+30 ~ 41+67, RT, 32 LF

TEMPORARY 8" YELLOW LINE
RAMP "C" 41+30 ~ 41+67, RT, 32 LF

DURABLE 24" STOP BAR
SHERATON DRIVEWAY, 32 LF
STAPLES DRIVEWAY, 36 LF
RAMP "C" 38+27, 46 LF

TEMPORARY 24" STOP BAR
RAMP "C" 38+27, 46 LF

DURABLE LETTER OR SYMBOL
RAMP "C" 37+47 ~ 37+71, LT, QTY=5 EA:
2 THRU/RIGHT ARROWS
2 LEFT ARROWS
1 "ONLY" (1 X 4 = 4)
RAMP "C" 37+71 ~ 38+00, RT, QTY=3 EA:
1 THRU/RIGHT ARROWS
2 LEFT ARROWS
RAMP "C" 38+30 ~ 41+11, RT, QTY =20 EA:
4 THRU/RIGHT ARROWS
8 THRU ARROWS
4 LEFT ARROWS
4 "ONLY" (4X4=16)

REMOVING SIGNS
1 EACH

TEMPORARY LETTER OR SYMBOL
RAMP "C" 38+30 ~ 41+11, RT, QTY =20 EA:
4 THRU/RIGHT ARROWS
8 THRU ARROWS
4 LEFT ARROWS
4 "ONLY" (4X4=16)

ERECTING SALVAGED SIGNS
1 EACH

REMOVAL OF EXISTING PAVEMENT MARKINGS
RAMP "C" 37+39 ~ 37+77 LT
RAMP "C" 38+27 ~ 39+75 LT-RT

PAVEMENT MARKING AND SIGNING LAYOUT SHEET 2

PROJECT NAME: SOUTH BURLINGTON
PROJECT NUMBER: IM 089-3(37)

FILE NAME: z03al78pmbdr.dgn
PROJECT LEADER: KEN UPMAL
DESIGNED BY: V.KACOYANNAKIS
PLOT DATE: 5/5/2006
DRAWN BY: V.KACOYANNAKIS
CHECKED BY: J.FORD
SHEET 55 OF 99

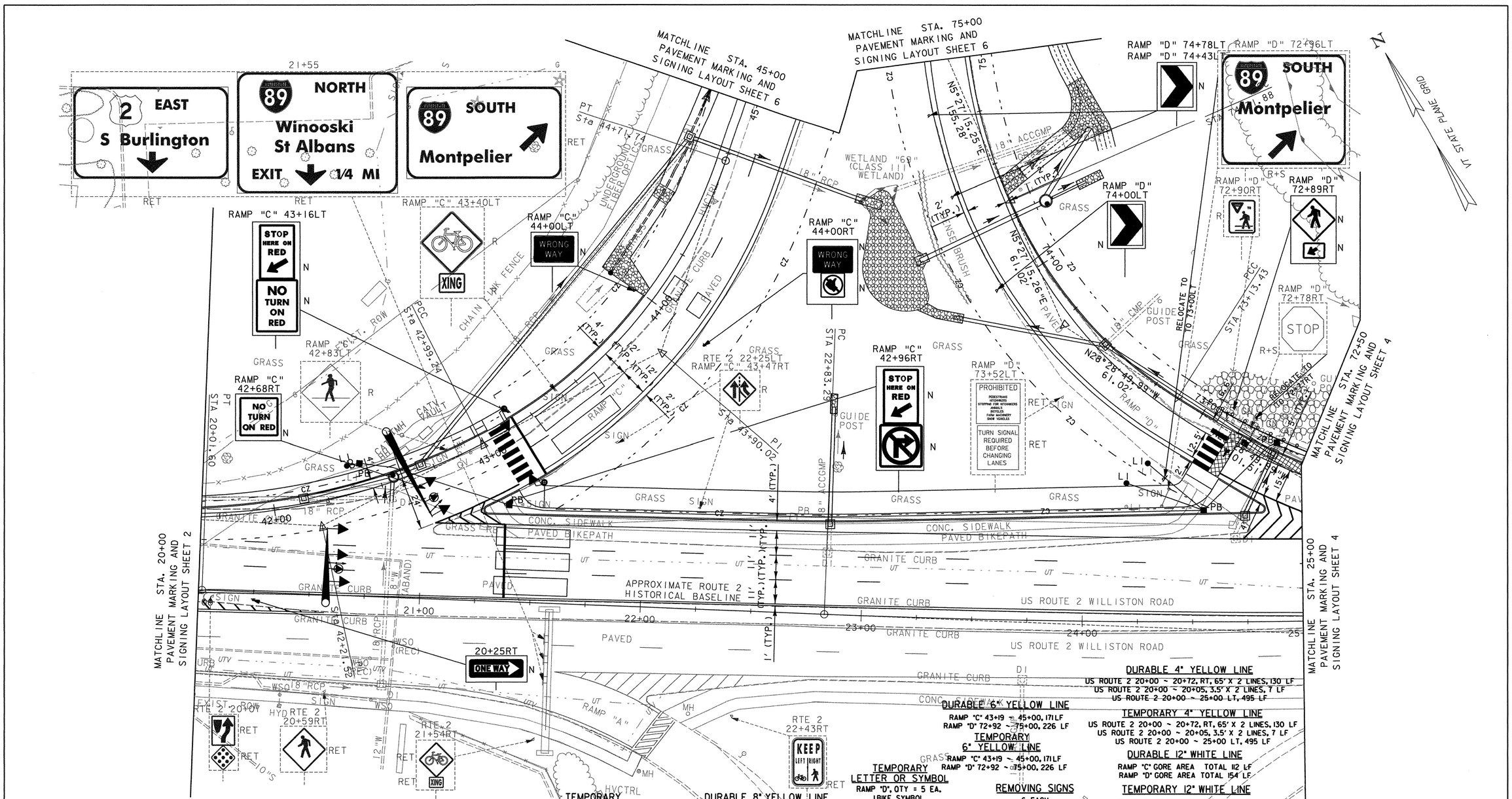

PAVEMENT MARKING AND SIGNING LAYOUT SHEET 3

PROJECT NAME: SOUTH BURLINGTON
PROJECT NUMBER: IM 089-3(37)

FILE NAME: z03al78pmbdr.dgn
PROJECT LEADER: KEN UPMAL
DESIGNED BY: V.KACOYANNAKIS
PLOT DATE: 5/5/2006
DRAWN BY: V.KACOYANNAKIS
CHECKED BY: J.FORD
SHEET 56 OF 99

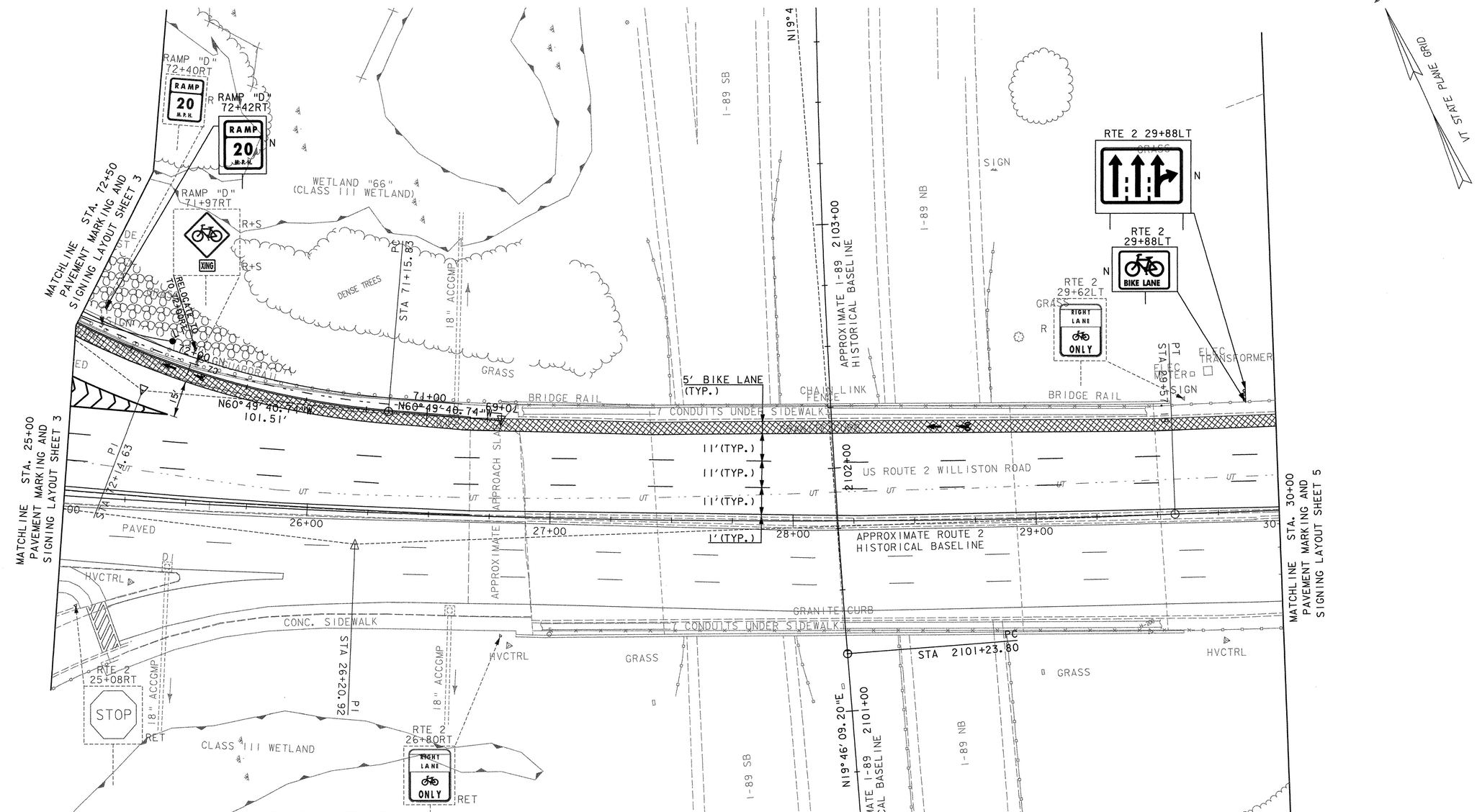

SIGN LEGEND

[ ]	=	EXISTING SIGN
[ ]	=	NEW SIGN
R	=	REMOVE EXISTING SIGN AND POST
R+S	=	SALVAGE SIGN AND RELOCATE TO NOTED LOCATION WITH NEW SIGN POST. REMOVE AND DISPOSE EXISTING SIGN POST
N	=	NEW
RET	=	RETAIN AT EXISTING LOCATION
B-B	=	BACK TO BACK

DATUM

VERTICAL NAVD 88

HORIZONTAL NAD 83 (1996)

DURABLE 4" WHITE LINE

US ROUTE 2 25+00 ~ 30+00 LT, 13 X 10' = 130 LF
US ROUTE 2 25+00 ~ 30+00 LT, 13 X 10' = 130 LF
US ROUTE 2 25+00 ~ 25+40 LT, 40 LF
US ROUTE 2 26+81 ~ 30+00 LT, 333 LF
RAMP "D" 70+69 ~ 72+48, 183 LF
RAMP "D" 72+02 ~ 72+42, 40 LF

TEMPORARY 4" WHITE LINE

US ROUTE 2 25+00 ~ 26+75 LT, 5 X 10' = 50 LF
US ROUTE 2 25+00 ~ 26+75 LT, 5 X 10' = 50 LF
US ROUTE 2 25+00 ~ 25+40 LT, 40 LF
RAMP "D" 70+69 ~ 72+48, 183 LF
RAMP "D" 72+02 ~ 72+42, 40 LF

DURABLE 4" YELLOW LINE

US ROUTE 2 25+00 ~ 30+00, 500 LF

TEMPORARY 4" YELLOW LINE

US ROUTE 2 25+00 ~ 26+75, 175 LF

DURABLE 12" WHITE LINE

US ROUTE 2 CHEVRON MARKINGS 25+00 ~ 25+40, 81LF

TEMPORARY 12" WHITE LINE

US ROUTE 2 CHEVRON MARKINGS 25+00 ~ 25+40, 81LF

DURABLE LETTER OR SYMBOL

RAMP "D" 71+96, BIKE SYMBOL, 1EA
RAMP "D" 72+08, BIKE THRU ARROW, 1EA.
US ROUTE 2 27+76, BIKE THRU ARROW, 1EA
US ROUTE 2 27+88, BIKE SYMBOL, 1EA

TEMPORARY LETTER OR SYMBOL

RAMP "D" 71+96, BIKE SYMBOL, 1EA
RAMP "D" 72+08, BIKE THRU ARROW, 1EA.

PAINTED ISLAND (MOD. - GREEN BIKE PATH)

RAMP "D" 72+50 RT ~ ROUTE 2 30+00 LT (5' WIDTH) - 2450 SF

REMOVING SIGNS

2 EACH

ERECTING SALVAGED SIGNS

2 EACH

REMOVAL OF EXISTING PAVEMENT MARKINGS

US ROUTE 2 26+75 ~ 30+00 LT

PAVEMENT MARKING AND SIGNING LAYOUT SHEET 4

PROJECT NAME: SOUTH BURLINGTON
PROJECT NUMBER: IM 089-3(37)

FILE NAME: z03a178pmbdr.dgn
PROJECT LEADER: KEN UPMAL
DESIGNED BY: V.KACOYANNAKIS
PLOT DATE: 5/22/2006
DRAWN BY: V.KACOYANNAKIS
CHECKED BY: J.FORD
SHEET 57 OF 99

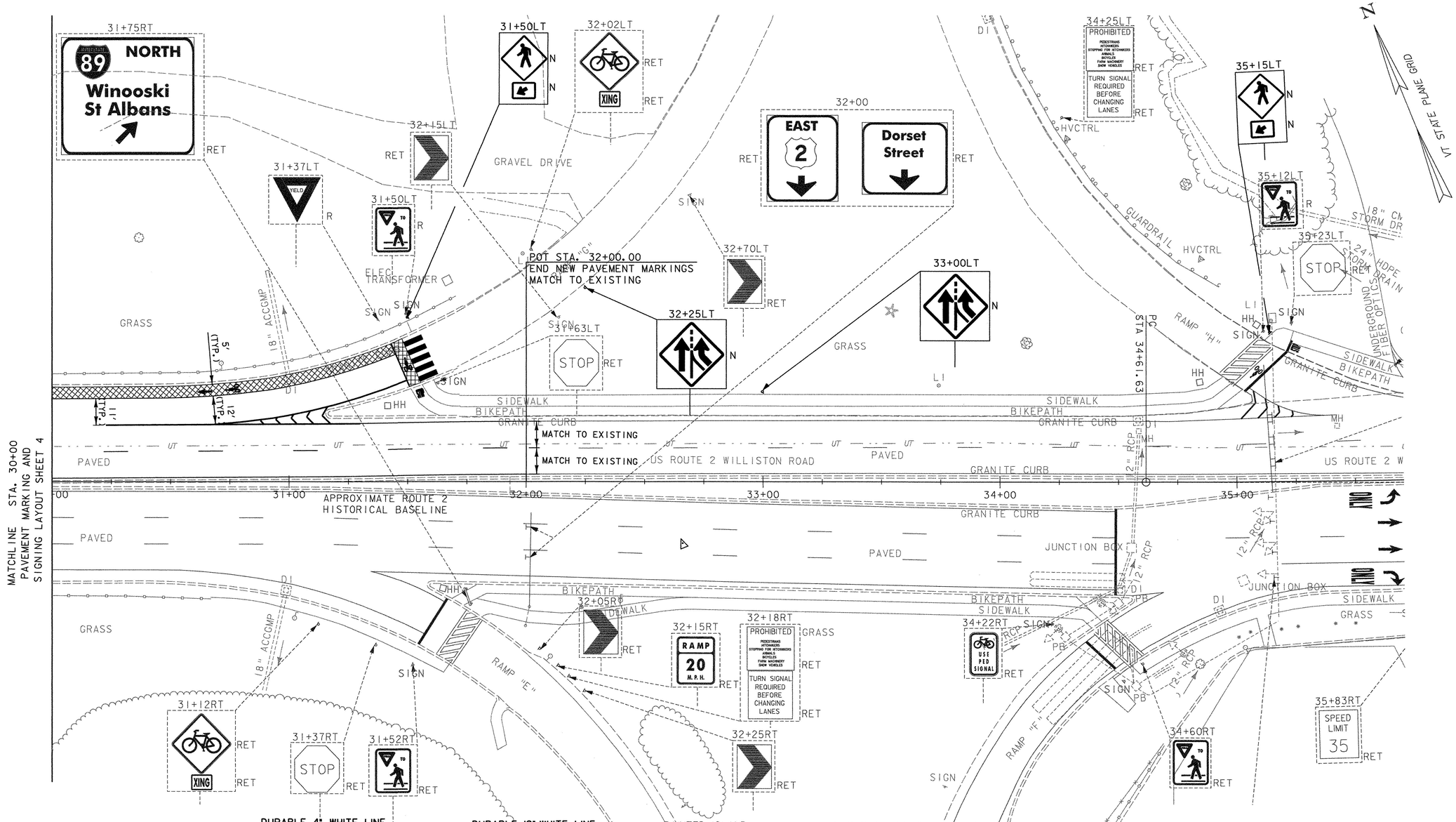

0 20 40
SCALE IN FEET

DATUM

VERTICAL NAVD 88

HORIZONTAL NAD 83 (1996)

SIGN LEGEND

	= EXISTING SIGN
	= NEW SIGN
R	= REMOVE EXISTING SIGN AND POST
R+S	= SALVAGE SIGN AND RELOCATE TO NOTED LOCATION WITH NEW SIGN POST. REMOVE AND DISPOSE EXISTING SIGN POST
N	= NEW
RET	= RETAIN AT EXISTING LOCATION
B-B	= BACK TO BACK

DURABLE 4" WHITE LINE
US ROUTE 2 30+00 ~ 32+00 LT, 5 X 10' = 50 LF
US ROUTE 2 30+23 ~ 32+00 LT, 178 LF
US ROUTE 2 30+67 ~ 31+48 LT, RAMP "G", 83 LF
US ROUTE 2 30+00 ~ 31+43 LT, RAMP "G", 146 LF
US ROUTE 2 31+45 (EDGE OF BIKE LANE), RAMP "G" 20 LF

DURABLE 4" YELLOW LINE
US ROUTE 2 30+00 ~ 32+00 LT ~ 201LF

DURABLE 12" WHITE LINE
US ROUTE 2 30+67 ~ 31+18 LT, CHEVRON MARKINGS - 29 LF

DURABLE CROSSWALK BAR TYPE
US ROUTE 2 31+54 LT, RAMP "G", 20 LF

REMOVE SIGNS
3 EACH

NOTE:
SEE SHEET NO. 69 FOR BAR TYPE CROSSWALK DETAIL

PAINTED ISLAND (MOD. ~ GREEN BIKE PATH)
US ROUTE 2 30+00 LT ~ 31+48 LT, (5' WIDTH) - 720 SF
RAMP G CROSSING, (5' WIDTH) - 100 SF

DURABLE LETTER OR SYMBOL
US ROUTE 2 30+64 LT, RAMP "G", BIKE THRU ARROW, 1EA
US ROUTE 2 30+76 LT, RAMP "G", BIKE SYMBOL, 1EA
US ROUTE 2 31+47 LT, RAMP "G", BIKE SYMBOL, 1EA
US ROUTE 2 31+53 LT, RAMP "G", BIKE "STOP", 1 X 4 = 4 EA)

REMOVAL OF EXISTING PAVEMENT MARKINGS
US ROUTE 2 30+00 ~ 32+00 LT

PAVEMENT MARKING AND SIGNING LAYOUT SHEET 5

PROJECT NAME: SO. BURLINGTON I-89 RAMP "C"
PROJECT NUMBER: IM 089-3(37)

FILE NAME: z03al78pmbdr.dgn
PROJECT LEADER: KEN UPMAL
DESIGNED BY: V.KACOYANNAKIS
PLOT DATE: 5/5/2006
DRAWN BY: V.KACOYANNAKIS
CHECKED BY: J.FORD
SHEET 58 OF 99

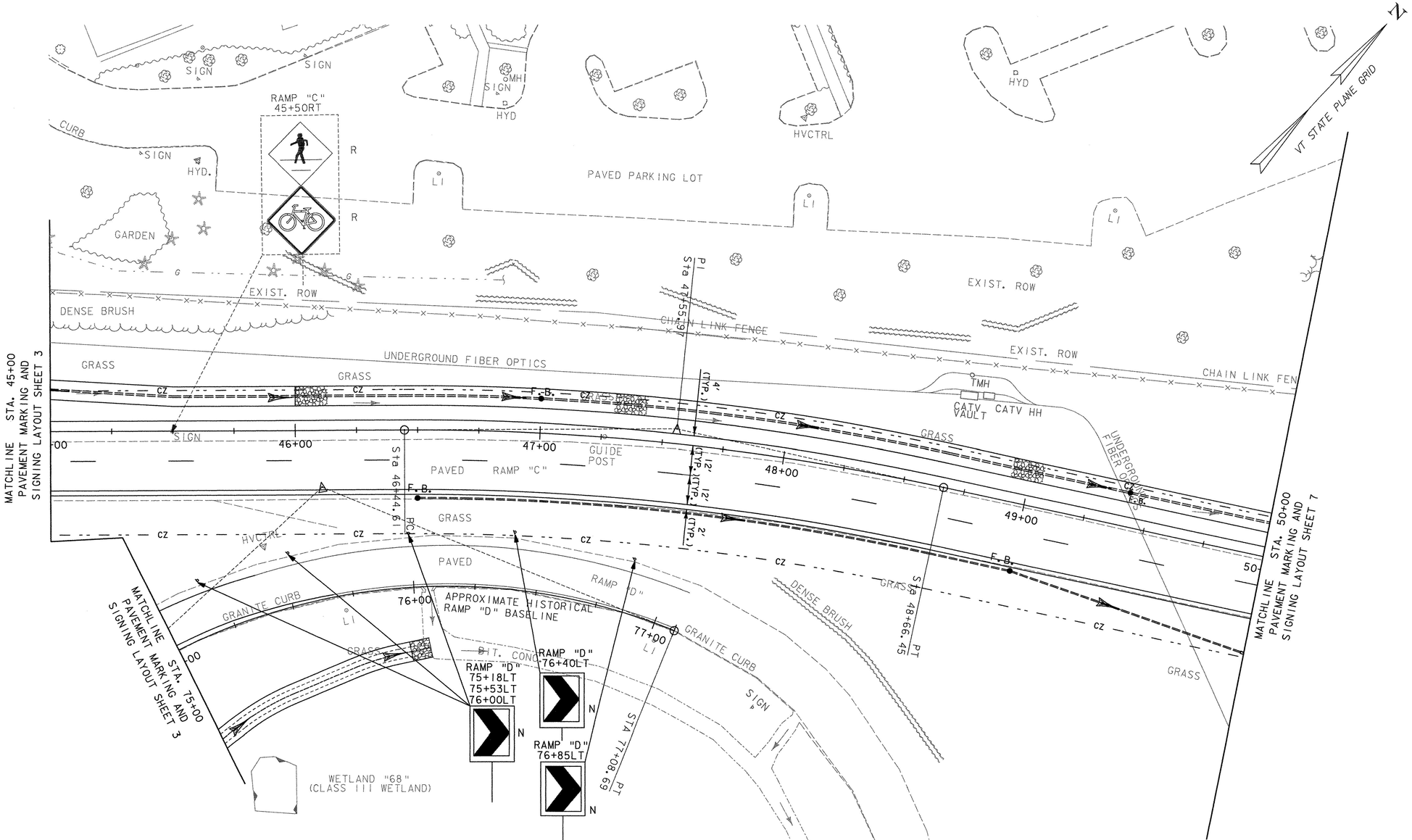

0 20 40
SCALE IN FEET

DATUM

VERTICAL NAVD 88
HORIZONTAL NAD 83 (1996)

SIGN LEGEND

	=	EXISTING SIGN
	=	NEW SIGN
R	=	REMOVE EXISTING SIGN AND POST
R+S	=	SALVAGE SIGN AND RELOCATE TO NOTED LOCATION WITH NEW SIGN POST. REMOVE AND DISPOSE EXISTING SIGN POST
N	=	NEW
RET	=	RETAIN AT EXISTING LOCATION
B-B	=	BACK TO BACK

DURABLE 6" WHITE LINE
RAMP "C" 45+00 ~ 50+00, 500 LF
RAMP "C" 45+00 ~ 50+00, 13 X 10' = 130 LF
RAMP "D" 75+00 ~ 75+67, 67 LF

DURABLE 6" YELLOW LINE
RAMP "C" 45+00 ~ 50+00, 500 LF
RAMP "D" 75+00 ~ 75+39, 42 LF

REMOVING SIGNS
2 EACH

TEMPORARY 6" WHITE LINE
RAMP "C" 45+00 ~ 50+00, 500 LF
RAMP "C" 45+00 ~ 50+00, 13 X 10' = 130 LF
RAMP "D" 75+00 ~ 75+67, 67 LF

TEMPORARY 6" YELLOW LINE
RAMP "C" 45+00 ~ 50+00, 500 LF
RAMP "D" 75+00 ~ 75+39, 42 LF

PAVEMENT MARKING AND SIGNING LAYOUT SHEET 6

PROJECT NAME: SO. BURLINGTON I-89 RAMP "C"
PROJECT NUMBER: IM 089-3(37)

FILE NAME: z03al78pmbdr.dgn
PROJECT LEADER: KEN UPMAL
DESIGNED BY: V.KACOYANNAKIS
PLOT DATE: 5/5/2006
DRAWN BY: V.KACOYANNAKIS
CHECKED BY: J.FORD
SHEET 59 OF 99

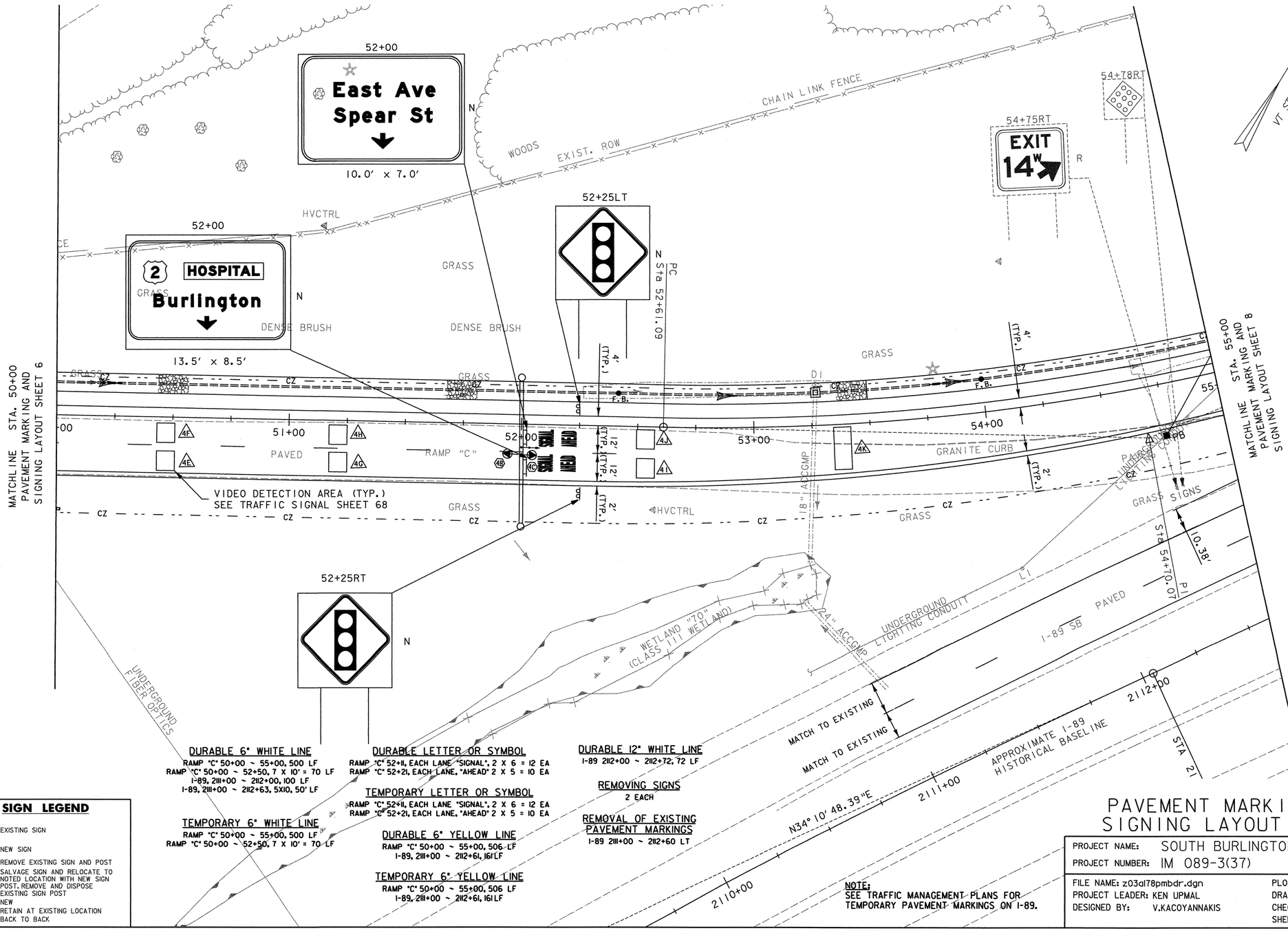

DURABLE 6" WHITE LINE
RAMP "C" 50+00 ~ 55+00, 500 LF
RAMP "C" 50+00 ~ 52+50, 7 X 10' = 70 LF
I-89, 2111+00 ~ 2112+00, 100 LF
I-89, 2111+00 ~ 2112+63, 5X10, 50' LF

TEMPORARY 6" WHITE LINE
RAMP "C" 50+00 ~ 55+00, 500 LF
RAMP "C" 50+00 ~ 52+50, 7 X 10' = 70 LF

DURABLE LETTER OR SYMBOL
RAMP "C" 52+11, EACH LANE, "SIGNAL", 2 X 6 = 12 EA
RAMP "C" 52+21, EACH LANE, "AHEAD" 2 X 5 = 10 EA

TEMPORARY LETTER OR SYMBOL
RAMP "C" 52+11, EACH LANE "SIGNAL", 2 X 6 = 12 EA
RAMP "C" 52+21, EACH LANE, "AHEAD" 2 X 5 = 10 EA

DURABLE 6" YELLOW LINE
RAMP "C" 50+00 ~ 55+00, 506 LF
I-89, 2111+00 ~ 2112+61, 161LF

TEMPORARY 6" YELLOW LINE
RAMP "C" 50+00 ~ 55+00, 506 LF
I-89, 2111+00 ~ 2112+61, 161LF

DURABLE 12" WHITE LINE
I-89 2112+00 ~ 2112+72, 72 LF

REMOVING SIGNS
2 EACH

REMOVAL OF EXISTING PAVEMENT MARKINGS
I-89 2111+00 ~ 2112+60 LT

NOTE:
SEE TRAFFIC MANAGEMENT PLANS FOR TEMPORARY PAVEMENT MARKINGS ON I-89.

0 20 40
SCALE IN FEET

DATUM
VERTICAL NAVD 88
HORIZONTAL NAD 83 (1996)

SIGN LEGEND

[ ]	= EXISTING SIGN
[ ]	= NEW SIGN
R	= REMOVE EXISTING SIGN AND POST
R+S	= SALVAGE SIGN AND RELOCATE TO NOTED LOCATION WITH NEW SIGN POST. REMOVE AND DISPOSE EXISTING SIGN POST
N	= NEW
RET	= RETAIN AT EXISTING LOCATION
B-B	= BACK TO BACK

PAVEMENT MARKING AND SIGNING LAYOUT SHEET 7

PROJECT NAME: SOUTH BURLINGTON
PROJECT NUMBER: IM 089-3(37)

FILE NAME: z03al78pmbdr.dgn
PROJECT LEADER: KEN UPMAL
DESIGNED BY: V.KACOYANNAKIS
PLOT DATE: 5/5/2006
DRAWN BY: V.KACOYANNAKIS
CHECKED BY: J.FORD
SHEET 60 OF 99

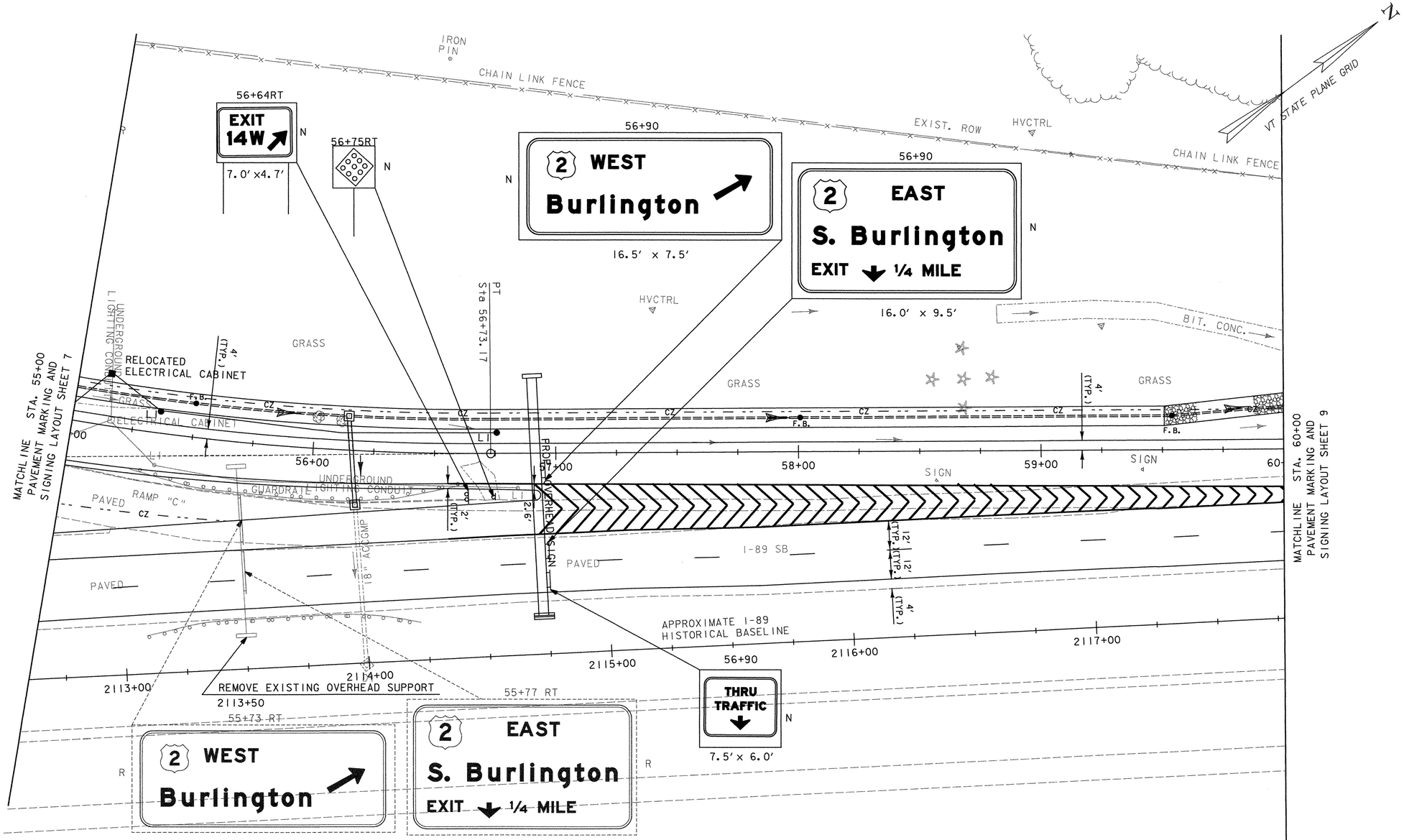

0 20 40
SCALE IN FEET

DATUM
VERTICAL NAVD 88
HORIZONTAL NAD 83 (1996)

SIGN LEGEND

[ ]	=	EXISTING SIGN
[ ]	=	NEW SIGN
R	=	REMOVE EXISTING SIGN AND POST
R+S	=	SALVAGE SIGN AND RELOCATE TO NOTED LOCATION WITH NEW SIGN POST. REMOVE AND DISPOSE EXISTING SIGN POST
N	=	NEW
RET	=	RETAIN AT EXISTING LOCATION
B-B	=	BACK TO BACK

DURABLE 6" WHITE LINE
RAMP "C" 55+00 ~ 60+00, 500 LF
I-89 2112+61 ~ 2117+75, 12X10' = 120' LF

TEMPORARY 6" WHITE LINE
RAMP "C" 55+00 ~ 60+00, 500 LF

DURABLE 6" YELLOW LINE
RAMP "C" 55+00 ~ 56+55, 156 LF
I-89 2112.61 ~ 2117.75, 514 LF

TEMPORARY 6" YELLOW LINE
RAMP "C" 55+00 ~ 56+55, 156 LF

DURABLE 12" WHITE LINE
RAMP "C" 56+55 ~ 60+00, 345 LF
I-89 2112+72 ~ 2117+80, 725 LF
CHEVRON MARKINGS 56+90 ~ 56+55, 890 LF

TEMPORARY 12" WHITE LINE
RAMP "C" 56+55 ~ 60+00, 345 LF
CHEVRON MARKINGS 56+90 ~ 56+55, 890 LF

REMOVING SIGNS
2 EACH

OVERHEAD TRAFFIC SIGN SUPPORT, REMOVED
I-89 2113+50

REMOVAL OF EXISTING PAVEMENT MARKINGS
NOTE: I-89 2112+60 ~ 2117+78 LT
SEE TRAFFIC MANAGEMENT PLANS FOR TEMPORARY PAVEMENT MARKINGS ON I-89.

PAVEMENT MARKING AND SIGNING LAYOUT SHEET 8

PROJECT NAME: SOUTH BURLINGTON
PROJECT NUMBER: IM 089-3(37)

FILE NAME: z03a178pmbdr.dgn
PROJECT LEADER: KEN UPMAL
DESIGNED BY: V.KACOYANNAKIS
PLOT DATE: 5/5/2006
DRAWN BY: V.KACOYANNAKIS
CHECKED BY: J.FORD
SHEET 61 OF 99

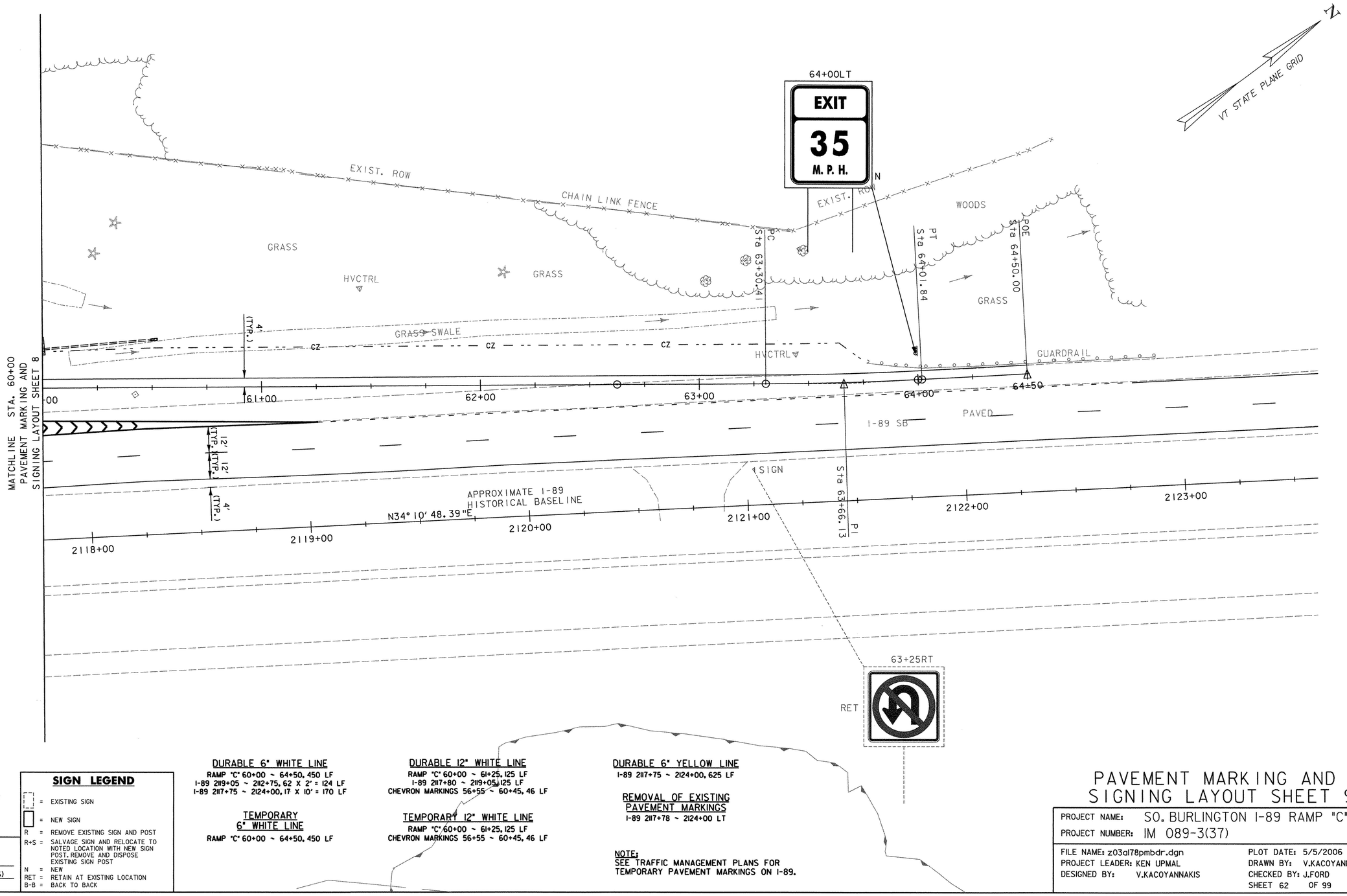

0 20 40
SCALE IN FEET

DATUM

VERTICAL NAVD 88
HORIZONTAL NAD 83 (1996)

SIGN LEGEND

[ ]	= EXISTING SIGN
[ ]	= NEW SIGN
R	= REMOVE EXISTING SIGN AND POST
R+S	= SALVAGE SIGN AND RELOCATE TO NOTED LOCATION WITH NEW SIGN POST. REMOVE AND DISPOSE EXISTING SIGN POST
N	= NEW
RET	= RETAIN AT EXISTING LOCATION
B-B	= BACK TO BACK

DURABLE 6" WHITE LINE
RAMP "C" 60+00 ~ 64+50, 450 LF
I-89 2119+05 ~ 2112+75, 62 X 2' = 124 LF
I-89 2117+75 ~ 2124+00, 17 X 10' = 170 LF

TEMPORARY 6" WHITE LINE
RAMP "C" 60+00 ~ 64+50, 450 LF

DURABLE 12" WHITE LINE
RAMP "C" 60+00 ~ 61+25, 125 LF
I-89 2117+80 ~ 2119+05, 125 LF
CHEVRON MARKINGS 56+55 ~ 60+45, 46 LF

TEMPORARY 12" WHITE LINE
RAMP "C" 60+00 ~ 61+25, 125 LF
CHEVRON MARKINGS 56+55 ~ 60+45, 46 LF

DURABLE 6" YELLOW LINE
I-89 2117+75 ~ 2124+00, 625 LF

REMOVAL OF EXISTING PAVEMENT MARKINGS
I-89 2117+78 ~ 2124+00 LT

NOTE:
SEE TRAFFIC MANAGEMENT PLANS FOR TEMPORARY PAVEMENT MARKINGS ON I-89.

PAVEMENT MARKING AND SIGNING LAYOUT SHEET 9

PROJECT NAME: SO. BURLINGTON I-89 RAMP "C"
PROJECT NUMBER: IM 089-3(37)

FILE NAME: z03al78pmbdr.dgn
PROJECT LEADER: KEN UPMAL
DESIGNED BY: V.KACOYANNAKIS
PLOT DATE: 5/5/2006
DRAWN BY: V.KACOYANNAKIS
CHECKED BY: J.FORD
SHEET 62 OF 99

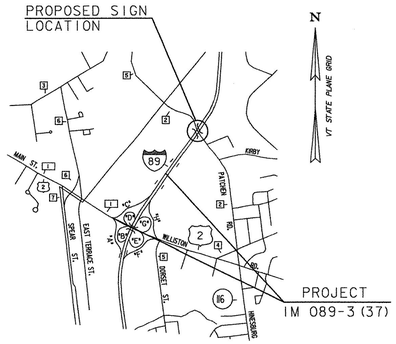

LOCUS MAP

APPROXIMATE SCALE: 1" = 2500'

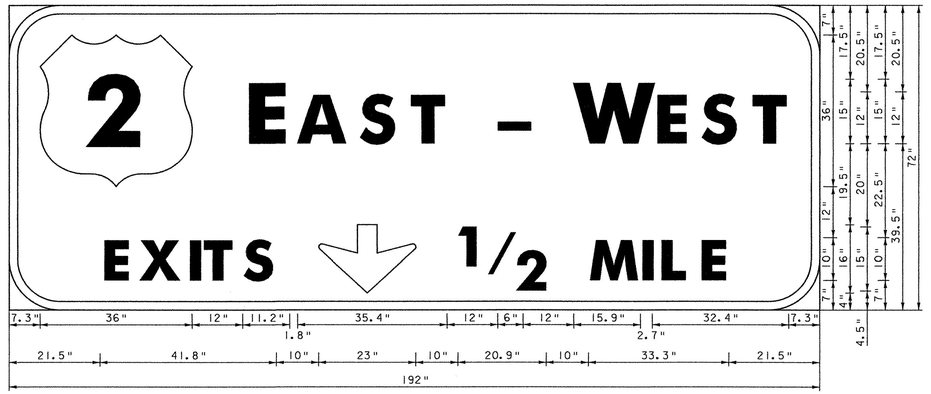

SIGN A

12.0" Radius, 2.0" Border, White on Green;
"EAST - WEST" E Mod; "EXITS" E Mod;
Down Arrow Custom - 16.0" 270°; "1/2" E Mod;
"MILE" E Mod;

USE TYPE III GREEN REFLECTIVE SHEETING AND ASTM TYPE IX BOARDER AND TEXT (TYP.)

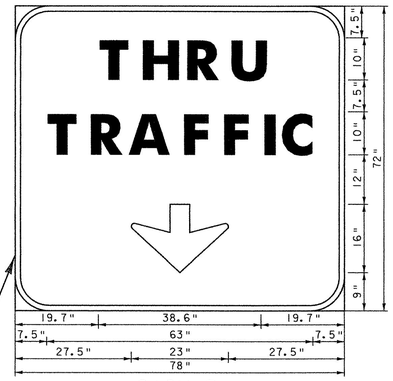

SIGN B

8.0" Radius, 1.3" Border, White on Green;
"THRU" E Mod; "TRAFFIC" E Mod;
Down Arrow Custom - 16.0" 270°;

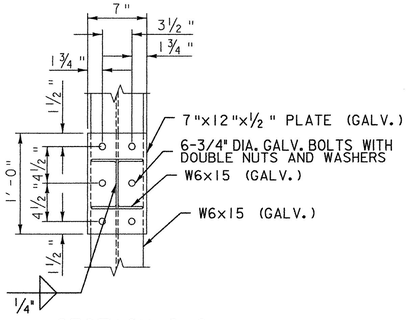

SECTION C-C

SCALE: 1 1/2" = 1'-0"

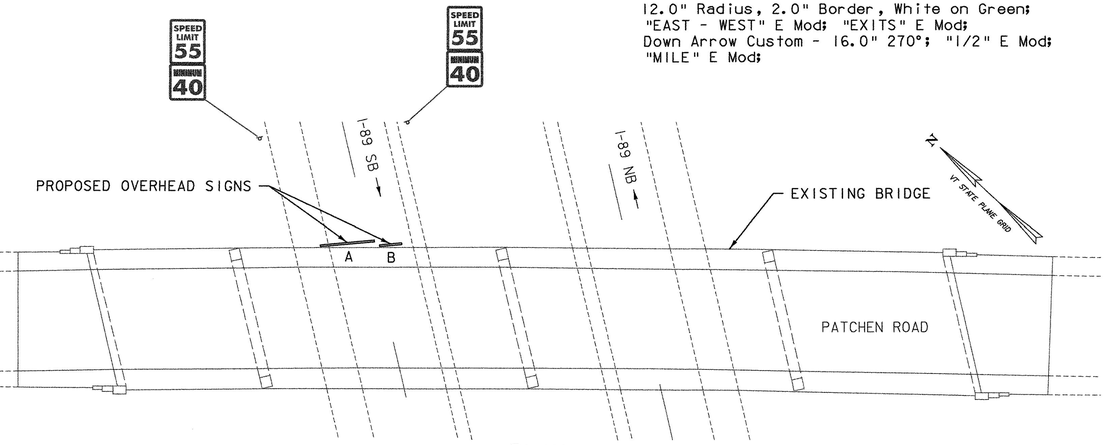

PLAN

0 20 40
SCALE IN FEET
SCALE: 1" = 20'

TRAFFIC SIGN DETAIL

SCALE: 3/4" = 1'-0"

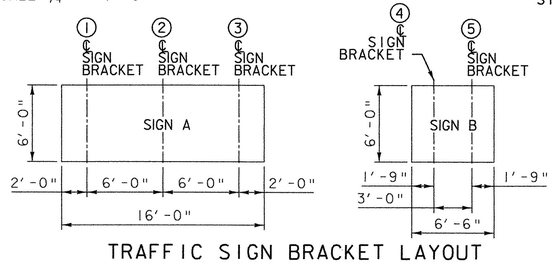

TRAFFIC SIGN BRACKET LAYOUT

SCALE: 3/16" = 1'-0"

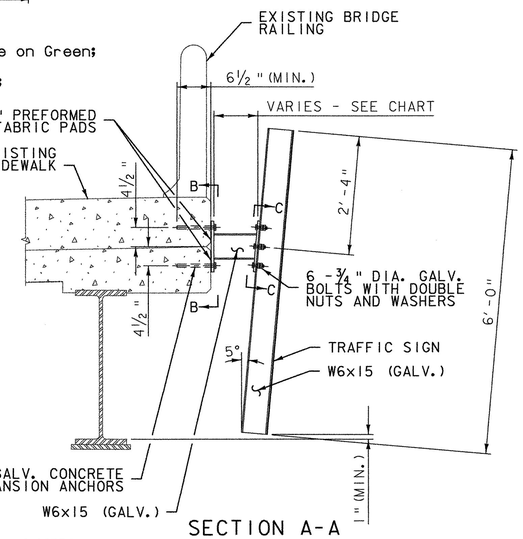

SECTION A-A

SCALE: 3/4" = 1'-0"

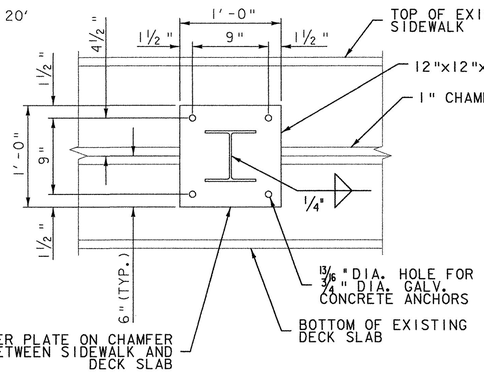

SECTION B-B

SCALE: 1 1/2" = 1'-0"

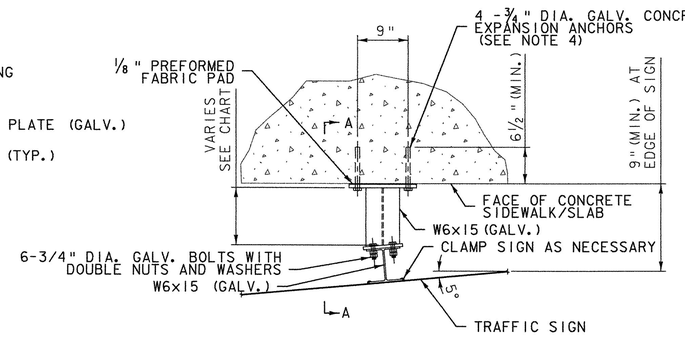

TRAFFIC SIGN SUPPORT DETAIL

SCALE: 1" = 1'-0"

LOCATION	LENGTH ALONG ℄
SIGN "A"	
①	1'-4 1/2"
②	10 1/8"
③	3 7/8"
SIGN "B"	
④	7"
⑤	3 7/8"

GENERAL NOTE:

TRAFFIC MANAGEMENT FOR THE PLACEMENT OF THE SIGNS "A" AND "B" SHALL BE DONE IN ACCORDANCE WITH VTRANS STANDARD DETAILS E-103 AND THE SPECIAL PROVISIONS.

STRUCTURAL NOTES:

1. ALL HOLES FOR 3/4" DIA. BOLTS SHALL BE 13/16".
2. CONCRETE EXPANSION ANCHORS SHALL BE 3/4" DIA. (GALV.) AND SHALL PROVIDE A MINIMUM ALLOWABLE TENSILE CAPACITY OF 2.5 KIPS AND A MINIMUM ALLOWABLE SHEAR CAPACITY OF 1 KIP. CONCRETE EXPANSION ANCHORS SHALL MEET THE MATERIAL REQUIREMENTS OF ASTM A193
3. EMBEDMENT FOR 3/4" DIA. CONCRETE ANCHORS SHALL BE AS SPECIFIED BY MANUFACTURER. BUT NOT LESS THAN 6 1/2".
4. SIGN BRACKET SHALL BE LOCATED SUCH THAT DRILLING FOR CONCRETE EXPANSION ANCHORS AVOIDS EXISTING REINFORCING STEEL IN SIDEWALK AND DECK.

DATUM

VERTICAL N/A
HORIZONTAL N/A

PATCHEN ROAD BRIDGE SIGN SUPPORT PLAN AND DETAILS

PROJECT NAME: SOUTH BURLINGTON
PROJECT NUMBER: IM 089-3(37)

FILE NAME: z03al78signsupp.dgn
PROJECT LEADER: KEN UPMAL
DESIGNED BY: M.CRUZ
PLOT DATE: 5/5/2006
DRAWN BY: W.WONG
CHECKED BY: K.ISHIKURA
SHEET 63 OF 99

STATE OF VERMONT
AGENCY OF TRANSPORTATION

TRAFFIC SIGN SUMMARY SHEET

MILEMARKER, STATION, OR SIGN NUMBER	SIGN LEGEND	SIGN DIMENSIONS			NEW & SALVAGED SIGNS				EXIST POST		NEW SIGN POSTS																						REMARKS	SIGN DETAIL	
		EA	WIDTH (In)	HEIGHT (In)	"A"	"B"	SALV SIGN	SALV TIS	RETAIN	SALVAGE	NO. OF POSTS	FLANGED CHANNEL lb/ft			SQUARE STEEL (In) lb/ft			ANCHOR	SLEEVE	TUBULAR ALUMINUM Ø (In) lb/ft			TUBULAR STEEL Ø (In)					W-SHAPE STEEL				SIGN FRAMED		DETAIL ON SHEET NUMBER	STD. SHEET NUMBER
																						FOUND-ATION lb/ft					FTG. SIZE		WEIGHT	POST SIZE				
												1.12	2.0	3.0	1.75	2.0	2.5			3.0	4.0	4.0 MOD		3.0	3.5	4.0	5.0	24"	30"						
															1.88	2.16	3.35			1.3	1.7	1.7		7.6	9.0	10.8	14.6								
												OPTION ITEMS																								
STATION 15+75, LT ROUTE 2	LEFT ONLY, THRU RIGHT	1	36	30	7.5						1			X		X		1															INSTALL NEW SIGN ON NEW POST		
STATION 20+25, RT ROUTE 2	R6-1R, ONE- WAY RIGHT	1	36	12	3						1				X			1	1														INSTALL NEW SIGN ON NEW POST		STD. E-142
STATION 29+88, LT ROUTE 2	THRU, THRU, THRU-RIGHT	1	48	30	10						2			X		X		2															INSTALL NEW SIGN ON NEW POSTS		STD. E-145B
STATION 29+88, LT ROUTE 2	R3-17, BIKE LANE	1	30	24	5.0																												INSTALL NEW SIGN ON NEW POST		STD. E-155
STATION 31+50, LT ROUTE 2	W11-2, PEDESTRIAN CROSSING	1	30	30	6.25						1			X		X		1															INSTALL NEW SIGN ON NEW POST		STD. E-152
STATION 31+50, LT ROUTE 2	W16-7p, ARROW DOWN LT	1	24	12	2																												INSTALL NEW SIGN ON NEW POSTS, (SUB-MOUNT W/ PREVIOUS SIGNS)		STD. E-152
STATION 32+25, LT ROUTE 2	W4-3, ADDED LANE SIGN	1	30	30	6.25						1			X		X		1															INSTALL NEW SIGN ON NEW POST		STD. E-155
STATION 33+00, LT ROUTE 2	W4-3, ADDED LANE SIGN	1	30	30	6.25						1			X		X		1															INSTALL NEW SIGN ON NEW POST		STD. E-155
STATION 35+15, LT ROUTE 2	W11-2, PEDESTRIAN CROSSING	1	30	30	6.25						1			X		X		1															INSTALL NEW SIGN ON NEW POST		STD. E-152
STATION 35+15, LT ROUTE 2	W16-7p, ARROW DOWN LT	1	24	12	2																												INSTALL NEW SIGN ON NEW POSTS, (SUB-MOUNT W/ PREVIOUS SIGNS)		STD. E-152
STATION 41+49, LT RAMP "C"	R2-1, SPEED LIMIT 35 MPH	1					1				1			X		X		1															RELOCATE EXISTING SIGN ON NEW POST		STD. E-142
STATION 42+68, RT RAMP "C"	R10-11B NTOR MAST ARM MOUNT	1	24	24	4																												OVERHEAD MOUNT NEW SIGN ON MAST ARM		STD. E-140
STATION 42+96, RT RAMP "C"	R3-1, NO RIGHT TURNS	1	24	24	4																												SUB-MOUNT NEW SIGN WITH PREVIOUS SIGN		STD. E-143
STATION 42+96, RT RAMP "C"	R10-6, STOP HERE ON RED	1	24	36	6						1			X		X		1															INSTALL NEW SIGN ON NEW POST		STD. E-140
												FT	FT	FT 94	FT 12	FT 125	FT		EA 1	LB	LB	LB		LB	LB	LB	LB								
TOTALS			SF 68.5	SF	EA. 1	SF						LF 94			LF 137					LB			EA.	LB				EA.	EA.	LB					

FINAL POST LENGTHS ARE TO BE DETERMINED IN THE FIELD. POST SIZES ARE COMPUTED BASED ON INFORMATION FURNISHED ON THE STANDARD SHEETS AND THE TRAFFIC & SAFETY DIVISION'S "SIGN POST DESIGN GUIDELINE."

PROJECT NAME: SOUTH BURLINGTON
PROJECT NUMBER: IM 089-3(37)

FILE NAME: z03a178tss.dgn
PROJECT LEADER: KEN UPMAL
DESIGNED BY: V. KACOYANNAKIS
PLOT DATE: 5/22/2006
DRAWN BY: V. KACOYANNAKIS
CHECKED BY: J. FORD
SHEET 64 OF 99

STATE OF VERMONT
AGENCY OF TRANSPORTATION

TRAFFIC SIGN SUMMARY SHEET

MILEMARKER, STATION, OR SIGN NUMBER	SIGN LEGEND	SIGN DIMENSIONS EA	WIDTH (In)	HEIGHT (In)	NEW & SALVAGED SIGNS "A"	"B"	SALV SIGN	SALV TIS	EXIST POST RETAIN	EXIST POST SALVAGE	NEW SIGN POSTS NO. OF POSTS	FLANGED CHANNEL lb/ft 1.12	2.0	3.0	SQUARE STEEL (In) lb/ft 1.75 1.88	2.0 2.16	2.5 3.35	ANCHOR	SLEEVE	TUBULAR ALUMINUM Ø (In) lb/ft 3.0 1.3	4.0 1.7	4.0 MOD 1.7	TUBULAR STEEL Ø (in) FOUNDATION	lb/ft 3.0 7.6	3.5 9.0	4.0 10.8	5.0 14.6	W-SHAPE STEEL FTG. SIZE 24"	30"	WEIGHT	POST SIZE	SIGN REMAINED REQUIRED	REMARKS	SIGN DETAIL DETAIL ON SHEET NUMBER	STD. SHEET NUMBER
												OPTION ITEMS																									
STATION 43+16, LT RAMP "C"	STOP HERE ON RED	R10-6, STOP HERE ON RED	1	24	36	6					1			X		X		1																INSTALL NEW SIGN ON NEW POST		STD. E-140
STATION 43+16, LT RAMP "C"	NO TURN ON RED	R10-11A NTOR	1	24	30	5																												SUB-MOUNT NEW SIGN WITH PREVIOUS SIGN		STD. E-140
STATION 44+00, LT RAMP "C"	WRONG WAY	R5-1A, WRONG WAY	1	36	24	6					1			X		X		1																INSTALL NEW SIGN ON NEW POST		STD E-143
STATION 44+00, RT RAMP "C"	WRONG WAY	R5-1A, WRONG WAY	1	36	24	6					1			X		X		1																INSTALL NEW SIGN ON NEW POST		STD E-143
STATION 44+00, RT RAMP "C"		R9-4A, NO HITCH HIKING	1	24	24	4																												INSTALL NEW SIGN ON NEW POST, (SUB-MOUNT W/ PREVIOUS SIGN)		STD E-143
STATION 52+00 RAMP "C" OVERHEAD	3 HOSPITAL Burlington	GUIDE SIGN ROUTE 2 - HOSPITAL OVERLAY SYMBOL BURLINGTON	1	162	102		114.75																											INSTALL NEW SIGN ON NEW OVERHEAD SIGN SUPPORT, CENTER ARROW OVER LANE, HOSPITAL TO BE BLUE BACKGROUND WITH WHITE LETTERING		
STATION 52+00 RAMP "C" OVERHEAD	East Ave Spear St	GUIDE SIGN East Ave Spear St	1	120	84		70																											INSTALL NEW SIGN ON NEW OVERHEAD SIGN SUPPORT, CENTER ARROW OVER LANE		
STATION 52+25, RT RAMP "C"		W3-3, SIGNAL AHEAD	1	36	36	9					2			X		X		2																INSTALL NEW SIGN ON NEW POST		STD. E-152
STATION 52+25, LT RAMP "C"		W3-3, SIGNAL AHEAD	1	36	36	9					2			X		X		2																INSTALL NEW SIGN ON NEW POST		STD. E-152
STATION 56+64, RT RAMP "C"	EXIT 14W	EXIT w 14	1	84	56		32.67				2					X		2	2															INSTALL NEW SIGN ON NEW POSTS, USE ANCHORS		
STATION 56+75 RT RAMP "C"		OMI-1	1	18	18	2.25					1			X		X		1																INSTALL NEW SIGN ON NEW POST		STD. E-150
STATION 56+90 RAMP "C" OVERHEAD	2 WEST Burlington	GUIDE SIGN Route 2 WEST, Burlington	1	198	90		123.75																											INSTALL NEW SIGN ON NEW OVERHEAD SIGN SUPPORT, CENTER ARROW OVER EXIT LANE		
STATION 56+90 RAMP "C" OVERHEAD	2 EAST S. Burlington EXIT 1/4 MILE	GUIDE SIGN Route 2 EAST, So. Burlington EXIT - 1/4MILE	1	192	114		152																											INSTALL NEW SIGN ON NEW OVERHEAD SIGN SUPPORT, CENTER ARROW OVER LANE		
STATION 56+90 RAMP "C"	THRU TRAFFIC	GUIDE SIGN THRU TRAFFIC	1	90	72		45																											INSTALL NEW SIGN ON NEW POST		
STATION 64+00, LT RAMP "C"	EXIT 35 M.P.H.	W13-2 EXIT 35 MPH	1	36	48	12					2			X		X		2																INSTALL NEW SIGN ON NEW POST		STD. E-150
												FT	FT	FT 119	FT	FT 124.5	FT		EA 2	LB	LB	LB		LB	LB	LB	LB								
	TOTALS				SF 59.25	SF 538.17	EA.	SF				LF 119			LF 124.5					LB			EA.	LB				EA.	EA.	LB					

FINAL POST LENGTHS ARE TO BE DETERMINED IN THE FIELD. POST SIZES ARE COMPUTED BASED ON INFORMATION FURNISHED ON THE STANDARD SHEETS AND THE TRAFFIC & SAFETY DIVISION'S "SIGN POST DESIGN GUIDELINE."

PROJECT NAME: SOUTH BURLINGTON
PROJECT NUMBER: IM 089-3(37)

FILE NAME: z03a178tss.dgn
PROJECT LEADER: KEN UPMAL
DESIGNED BY: V. KACOYANNAKIS
PLOT DATE: 5/5/2006
DRAWN BY: V. KACOYANNAKIS
CHECKED BY: J. FORD
SHEET 65 OF 99

STATE OF VERMONT
AGENCY OF TRANSPORTATION

TRAFFIC SIGN SUMMARY SHEET

MILEMARKER, STATION, OR SIGN NUMBER	SIGN LEGEND	SIGN DIMENSIONS EA	WIDTH (In)	HEIGHT (In)	NEW & SALVAGED SIGNS "A"	"B"	SALV SIGN	SALV TIS	EXIST POST RETAIN	EXIST POST SALVAGE	NEW SIGN POSTS NO. OF POSTS	FLANGED CHANNEL lb/ft 1.12	2.0	3.0	SQUARE STEEL (In) lb/ft 1.75 1.88	2.0 2.16	2.5 3.35	ANCHOR	SLEEVE	TUBULAR ALUMINUM Ø (In) lb/ft 3.0 1.3	4.0 1.7	4.0 MOD 1.7	TUBULAR STEEL Ø (In) FOUNDATION	lb/ft 3.0 7.6	3.5 9.0	4.0 10.8	5.0 14.6	W-SHAPE STEEL FTG. SIZE 24"	30"	WEIGHT	POST SIZE	REMOVED SIGN RETAINED	REMARKS	SIGN DETAIL DETAIL ON SHEET NUMBER	STD. SHEET NUMBER
												OPTION ITEMS																									
STATION 71+97, RT RAMP "D"		W11-1, BICYCLE CROSSING	1					1			1			X		X		1															RELOCATE EXISTING SIGN ON NEW POST		STD. E-153B
STATION 71+97, RT RAMP "D"		W4-265 "XING" SIGN	1					1																									RELOCATE SIGN ON NEW POST, (SUB-MOUNT W/ PREVIOUS SIGN)		STD. E-153B
STATION 72+78, RT RAMP "D"		R1-1, STOP SIGN - PATH	1					1					X		X			1															RELOCATE EXISTING SIGN ON NEW POST		STD. E-143
STATION 72+42, RT RAMP "D"		W13-2, RAMP 20 M.P.H.	1	24	30	5					1			X		X		1															INSTALL NEW SIGN ON NEW POST		STD. E-150
STATION 72+89, RT RAMP "D"		W11-2, PEDESTRIAN CROSSING	1	30	30	6.25					1			X		X		1															INSTALL NEW SIGN ON NEW POST		STD. E-152
STATION 72+89, RT RAMP "D"		W16-7p, ARROW DOWN LT	1	24	12	2																											INSTALL NEW SIGN ON NEW POSTS, (SUB-MOUNT W/ PREVIOUS SIGNS)		STD. E-152
STATION 72+96, LT RAMP "D"	GUIDE SIGN, I-89 SOUTH, MONTPELIER		1					1			2																		2	1020	W12x30		RELOCATE SIGN AND POSTS, ON NEW FOUNDATIONS		
STATION 74+00, LT RAMP "D"		W1-8 CHEVRON	12	12	18	18					12		X		X			12															INSTALL NEW SIGN ON NEW POST, STARTING AT STA. 74+00 LT- RAMP "D" EVERY 40' - 12 SIGNS TOTAL		STD. E-150
PATCHEN ROAD BRIDGE	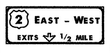	GUIDE SIGN Route 2 EAST, WEST EXIT - 1/2MILE	1	192	72		96																											INSTALL NEW SIGN ON BRIDGE SEE SHEET 63	63	
PATCHEN ROAD BRIDGE		GUIDE SIGN THRU TRAFFIC	1	78	72		39																											INSTALL NEW SIGN ON BRIDGE SEE SHEET 63	63	
FINAL POST LENGTHS ARE TO BE DETERMINED IN THE FIELD. POST SIZES ARE COMPUTED BASED ON INFORMATION FURNISHED ON THE STANDARD SHEETS AND THE TRAFFIC & SAFETY DIVISION'S "SIGN POST DESIGN GUIDELINE."												LF	LF 151	LF 55	LF	LF 157.5	LF 56.5	LF	LF	LB	LB	LB		LB	LB	LB	LB		2	1020				
	TOTALS	SF 31.25	SF 135.00	EA. 4	SF		LF 206		LF 214			LB			EA.	LB				EA.	EA. 2	LB 1020									

PROJECT NAME: SOUTH BURLINGTON
PROJECT NUMBER: IM 089-3(37)

FILE NAME: z03a178tss.dgn
PROJECT LEADER: KEN UPMAL
DESIGNED BY: V. KACOYANNAKIS
PLOT DATE: 5/5/2006
DRAWN BY: V. KACOYANNAKIS
CHECKED BY: J. FORD
SHEET 66 OF 99

TEST RESULTS

INDUCTANCE (μH)		RESISTANCE @ 77°F			VEHICLE LOOP DETECTOR							
CALCULATED	MEASURED	CALCULATED	MEASURED	LEAKAGE TO GROUND	LANE	LOOP NO.	SIZE	TYPE	NO. TURNS	CALL Ø	MODE	AMP.
279		0.14			NB LT	3	6'x30'	QUAD	2	Ø 3	PRESENCE	LOCK
243		0.16			NB LT	3A	6'x25'	QUAD	2	Ø 3	PRESENCE	LOCK
416		0.50			SB TH RT	4	6'x40'	QUAD	2	Ø 4	PRESENCE	NON-LOCK
420		0.52			SB LT	7	6'x40'	QUAD	2	Ø 7	PRESENCE	LOCK
246		0.18			NB TH RT	8	6'x25'	QUAD	2	Ø 8	PRESENCE	NON-LOCK

ALL CALCULATED VALUES ARE AT THE CONTROLLER. MEASURED VALUES MUST BE FILLED IN PRIOR TO TEST PERIOD.

NOTE: UTILIZE EXISTING LEAD-IN CABLE FOR PROPOSED LOOP DETECTORS, SAWCUT NEW DETECTORS AS SHOWN AND ABANDON EXISTING DETECTORS.

CONTROLLER TIMING CHART

LOCAL PROGRAMING	PHASE 1	2	3	4	5	6	7	8	
MINIMUM GREEN	6	15	5	5	6	15	5	5	-
PASSAGE	2.0	-	2.0	2.0	2.0	-	2.0	2.0	-
YELLOW CLEARANCE	4.0	4.0	4.0	4.0	4.0	4.0	4.0	4.0	-
ALL RED CLEARANCE	2.0	2.0	2.0	2.0	2.0	2.0	2.0	2.0	-
MAX 2 / 1	20/10	80/40	12/10	30/15	20/10	80/40	12/10	30/15	-
SEC/AT	-	-	-	-	-	-	-	-	-
TIME BEFORE REDUCE	-	-	-	-	-	-	-	-	-
TIME TO REDUCE	-	-	-	-	-	-	-	-	-
WALK	-	-	-	-	-	-	-	-	5
FLASHING DON'T WALK	-	-	-	-	-	-	-	-	18
DON'T WALK	-	-	-	-	-	-	-	-	2.0
RECALL	N.L.	MAX	N.L.	N.L.	N.L.	MAX	N.L.	N.L.	LOCK

COORDINATION TIMING (SECONDS)

DIAL SPLIT	CYCLE LENGTH	PHASES 1	2	3	4	5	6	7	8	OFFSETS SEC	%
1 - 1	75	11	39	11	14	11	39	11	14	12	16
2 - 1	75	12	35	11	17	12	35	11	17	11	15
3 - 1	75	14	35	11	14	15	35	11	15	13	17

1 - 1	WEEKDAYS - 0600 - 0900
2 - 1	WEEKDAYS - 1500 - 1800
3 - 1	WEEKDAYS - 0900 TO 1500, 1800 TO 2300
3 - 1	SAT. & SUN. - 0600 TO 2300

FOR ALL OTHER TIMES, THE INTERSECTION SHALL OPERATE IN FREE MODE.

PHASING DIAGRAM

SHERATON DR. / STAPLES DR. AT ROUTE 2 (WILLISTON ROAD)

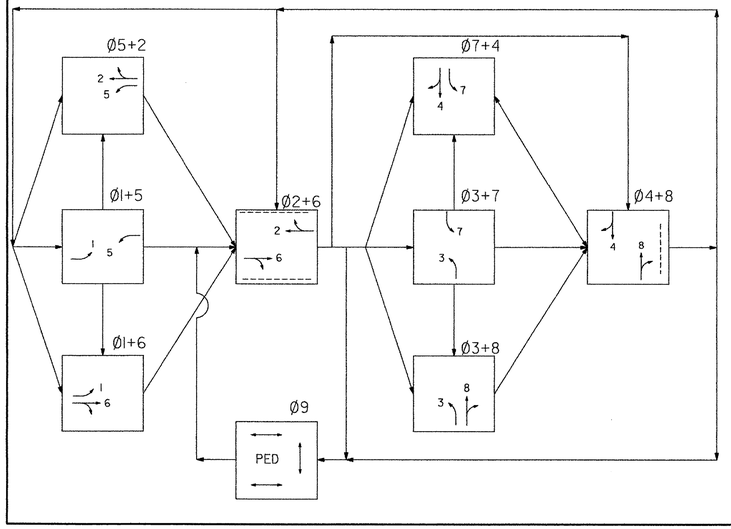

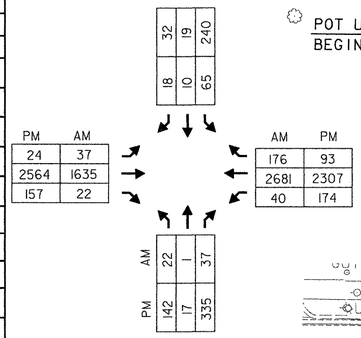

2025 HOURLY VOLUMES

SEE SHEET 55 FOR PAVEMENT MARKINGS AND SIGN LAYOUT.

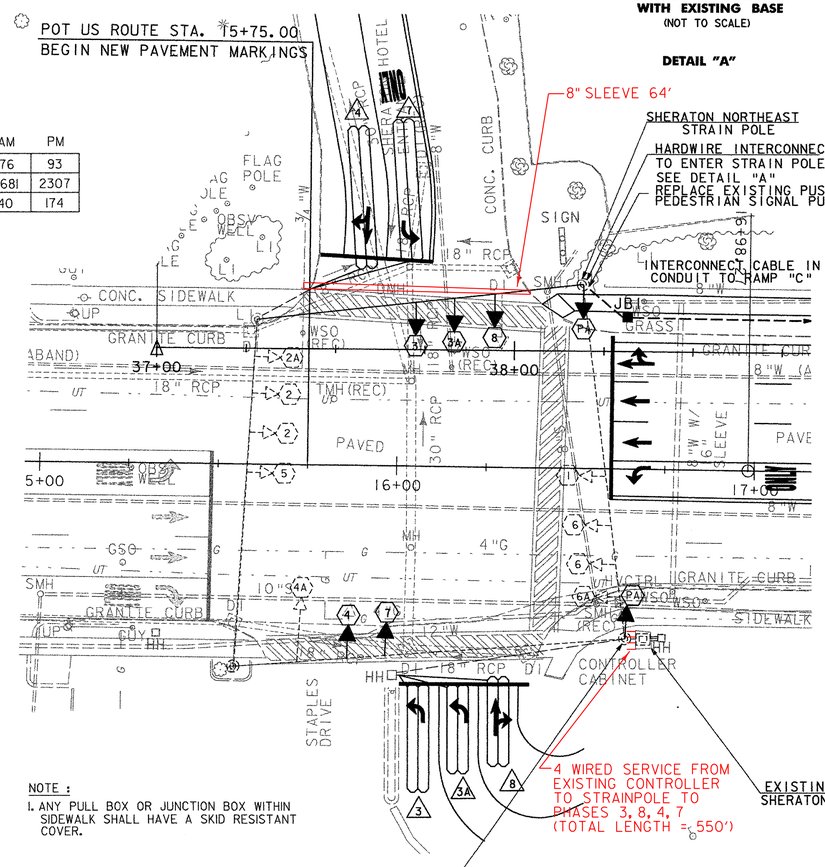

NOTE :
1. ANY PULL BOX OR JUNCTION BOX WITHIN SIDEWALK SHALL HAVE A SKID RESISTANT COVER.

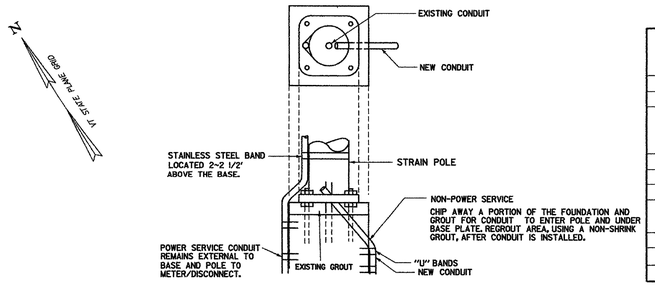

CONDUIT INSTALLATION WITH EXISTING BASE
(NOT TO SCALE)

DETAIL "A"

MAJOR EQUIPMENT LIST

EQUIPMENT ITEM NO. 678.15	US ROUTE 2 WILLISTON ROAD. @ SHERATON DRIVE
CANTILEVER POLES W/MAST ARMS	-
PEDESTAL POSTS	-
NEW 12" TRAFFIC SIGNAL HEADS W/ TUNNEL VISORS, DISCONNECT HANGERS, BACKPLATES AND MOUNTING HARDWARE	
ONE-WAY, 3-SECTION	5
ONE-WAY, 5-SECTION	-
TWO-WAY, 3-SECTION	-
HANDICAP ACCESSIBLE PEDESTRIAN PUSH-BUTTONS - POLE MOUNTED.	2
HANDICAP ACCESSIBLE PEDESTRIAN SIGNALS	2
CONTROLLER/CABINET	-
POWER DROP STANCHION	-

EQUIPMENT	ITEM NO.	UNIT	US ROUTE 2 WILLISTON ROAD. @ SHERATON DRIVE.	NOTES
INTERCONNECT CABLE	678.20	LF	210	CONTROLLER TO JBI
VEHICLE LOOP DETECTOR **	678.22	LF	611	-
WIRED CONDUIT (1½") (PVC)	678.23	LF	16	-
ELECTRICAL WIRING	678.24	LF	2023	-
JUNCTION BOX	678.26	LF	1	-

** THE QUANTITIES LISTED ARE FOR SAW CUT ONLY, LEAD-IN WIRES AND/OR SHIELDED CABLE QUANTITIES FROM THE EDGE OF PAVEMENT OR CURB ARE NOT INCLUDED IN THE TOTAL.

THE QUANTITY LISTED ABOVE ARE APPROXIMATE AND ARE FURNISHED FOR INFORMATION ONLY. MISCELLANEOUS (UNLISTED) WIRE, CABLE, HARDWARE ETC., ARE REQUIRED TO PROVIDE FOR A FUNCTIONING TRAFFIC SIGNAL SYSTEM. THE CONTRACTOR IS RESPONSIBLE FOR VERIFICATION OF THE NUMBER OF ITEMS AND THE TYPES OF EQUIPMENT REQUIRED.

EXISTING	NEW	LEGEND
		MAST ARM POLE (MP)
		STRAIN POLE (SP)
		CONTROLLER CABINET
		PULLBOX (PB)/ JUNCTION BOX (JB)
		SIGNAL HEAD
		CONDUIT
		VEHICLE LOOPS
		PEDESTAL POST (PP)
		MAST ARM MOUNTED SIGN
		STANCHION
		VIDEO DETECTOR
		VIDEO DETECTION AREA

EXISTING SIGNAL FACE ARRANGEMENT 12" LENSES

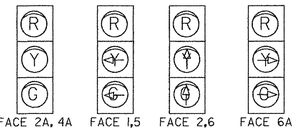

PROPOSED SIGNAL FACE ARRANGEMENT 12" LENSES

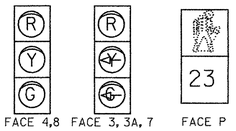

NOTE ; REPLACE SIDE STREET SIGNAL HEADS WITH SIGNAL HEADS SHOWN ABOVE, 4A TO REMAIN.

0 20 40
SCALE IN FEET

ROUTE 2 WILLISTON ROAD & SHERATON DRIVEWAY

WIRED CONDUIT (1½") (PVC)

JBI TO EXISTING STRAIN POLE NE CORNER - 16'

NOTE: FOR REMAINING CONDUIT TO CONTROLLER AT RAMP 'C' SEE TRAFFIC SIGNAL SHEET NO.2

NOTE : THIS PLAN IS SHOWN FOR SIGNAL PHASING, REPLACING SIGNAL HEADS FOR THE PHASE CHANGING, INSTALLING NEW LOOPS IN THE SHERATON AND STAPLES DRIVEWAYS AND CONNECTING RAMP 'C' TO THE EXISTING BURLINGTON CLOSED LOOP SYSTEM.

TRAFFIC SIGNAL SHEET #1

PROJECT NAME: SOUTH BURLINGTON
PROJECT NUMBER: IM 089-3(37)

FILE NAME: z03al78trfbdr.dgn
PROJECT LEADER: KEN UPMAL
DESIGNED BY: V. KACOYANNAKIS
PLOT DATE: 5/16/2006
DRAWN BY: V. KACOYANNAKIS
CHECKED BY: J. FORD
SHEET 67 OF 99

MAJOR EQUIPMENT LIST

EQUIPMENT ITEM NO. 678.15	US ROUTE 2 WILLISTON ROAD. @ RAMP "C"
CANTILEVER POLES W/MAST ARMS	2
PEDESTAL POSTS	2
NEW 12" TRAFFIC SIGNAL HEADS W/ TUNNEL VISORS, DISCONNECT HANGERS, BACKPLATES AND MOUNTING HARDWARE	
ONE-WAY, 3-SECTION	5
ONE-WAY, 5-SECTION	-
TWO-WAY, 3-SECTION	-
HANDICAP ACCESSIBLE PEDESTRIAN SIGNALS	
SIDE MOUNTED	-
POST TOP MOUNTED	2
CONTROLLER/CABINET	1
POWER DROP STANCHION	1
VEHICLE IDENTIFYING OPTICAL PREEMPTION AND COMMUNICATION SYSTEM (LS)	1(SEE SPECIAL PROVISIONS)
SPREAD SPECTRUM RADIO ASSEMBLY (LS)	1(SEE SPECIAL PROVISIONS)
CAMERA EXTENSION BRACKET (EA)	4 (SEE SPECIAL PROVISIONS)
CAMERA ASSEMBLY (EA)	4 (SEE SPECIAL PROVISIONS)
VIDEO DETECTION PROCESSOR (EA)	2 (SEE SPECIAL PROVISIONS)

EQUIPMENT	ITEM NO.	UNIT	US ROUTE 2 WILLISTON ROAD. @ RAMP "C"	NOTES
INTERCONNECTING CABLE	678.20	LF	415	CONT. TO JBI
INTERCONNECTING CABLE (MOD. - CAMERA CABLE)	678.20	LF	2200	SEE SPECIAL PROVISIONS
WIRED CONDUIT (1½") (PVC)	678.23	LF	1337	-
WIRED CONDUIT (2") (PVC)	678.23	LF	178	-
WIRED CONDUIT (2½") (PVC)	678.23	LF	15	-
ELECTRICAL CONDUIT SLEEVE	678.30	LF	81	6 INCHES
PULL BOX - STANDARD	678.25	EA	2	-
JUNCTION BOX	678.26	EA	9	-

THE QUANTITY LISTED ABOVE ARE APPROXIMATE AND ARE FURNISHED FOR INFORMATION ONLY. MISCELLANEOUS (UNLISTED) WIRE, CABLE, HARDWARE ETC., ARE REQUIRED TO PROVIDE FOR A FUNCTIONING TRAFFIC SIGNAL SYSTEM. THE CONTRACTOR IS RESPONSIBLE FOR VERIFICATION OF THE NUMBER OF ITEMS AND THE TYPES OF EQUIPMENT REQUIRED.

SEE SHEET 70 FOR MAST ARM CROSS SECTIONS

SEE SHEET 56 FOR PAVEMENT MARKINGS AND SIGNS LAYOUT

SEE SHEET 67 - TRAFFIC SIGNAL SHEET NO.1 FOR INTERCONNECT TO SHERATON DR.

SEE SHEETS 56 AND 60 FOR VIDEO DETECTION ON RAMP "C"

NOTES:

1. OFFSET IS REFERENCED AT THE END OF PHASE 2.
2. SPLITS AND OFFSETS ARE SHOWN IN SECONDS.
3. SPREAD SPECTRUM RADIO ASSEMBLY TO SEND SIGNAL COORDINATE DORSET STREET, INSTALL ANTENNA ON MPIA, MASTER RADIO IN CONTROLLER AT RAMP "C", INSTALL A REMOTE RADIO IN THE CONTROLLER CABINET AT DORSET AND AN ANTENNA ON THE EXISTING SPAN POLE (NW) CORNER.
4. VIDEO DETECTION AREAS 2A, 2B, 2C, 4A, 4B, 4C AND 4D ARE IN NON-LOCK PRESENCE MODE. VIDEO DETECTORS 4E - 4K ARE IN DELAY MODE, 10 SECONDS, LOCK. DETECTORS 4E-4J TO FORCE SPECIAL TIMING UNTIL RAMP CLEARS.
5. SIGNAL TO COORDINATE WITH BURLINGTON SYSTEM AT SHERATON DRIVEWAY BY INTERCONNECT.
6. SIGNAL TO INCLUDE VEHICLE IDENTIFYING OPTICAL PREEMPTION AND COMMUNICATION SYSTEM. THE SYSTEM INCLUDES AN OPTICAL SIGNAL PROCESSOR, 3 OPTICAL DETECTORS AND APPROXIMATELY 1290' +/- OF DETECTOR CABLE. THE SYSTEM SHALL BE COMPATIBLE WITH TOMAR STROBECOM II WHEN OPERATING IN THE ENCODED MODE.
7. ANY PULL BOX OR JUNCTION BOX WITHIN SIDEWALK SHALL HAVE A SKID RESISTANT COVER.

SIGN DETAIL

NO TURN ON RED

R10-11B 24" X 24"

NOTE: SEE SIGNING AND PAVEMENT MARKING SHEETS FOR ALL OTHER SIGNS

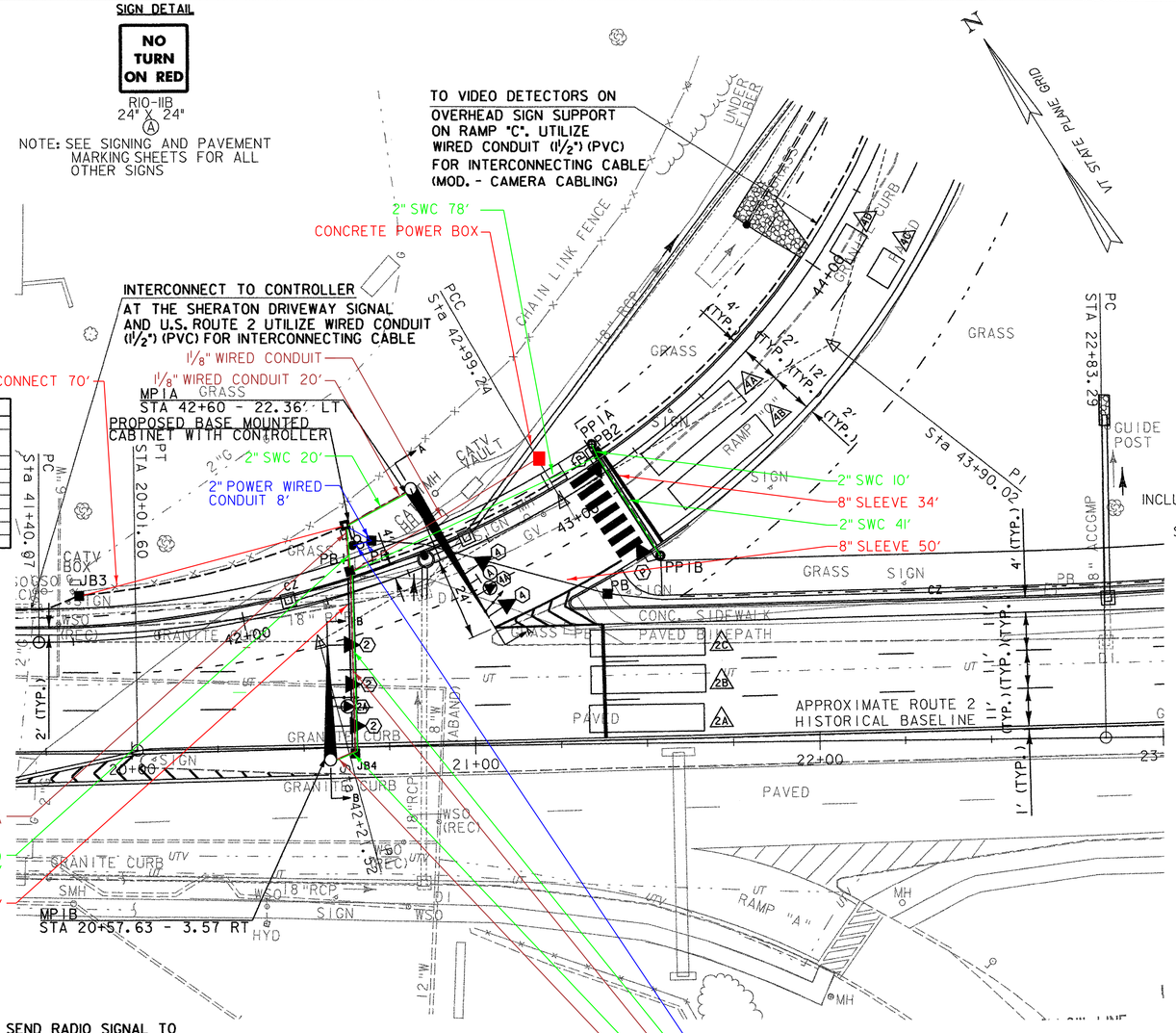

SEND RADIO SIGNAL TO COORDINATE WITH SIGNAL AT DORSET STREET

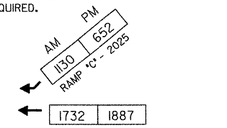

2025 HOURLY VOLUMES

ROUTE 2 (WILLISTON ROAD) & RAMP "C"

ELECTRICAL CONDUIT SLEEVE (8") (PVC)
RELOCATED RAMP "C" CROSSING - ~~31'~~ 34'
ROUTE 2 (WILLISTON ROAD) - 50'

WIRED CONDUIT (2½") (PVC)
CONTROLLER TO PBI - 15'

WIRED CONDUIT (2") (PVC)
CONTROLLER TO RELOCATED LIGHT STANDARD (LI) - 10'
PBI TO JB4 - 55'
PBI TO PB2 - 81'
CONTROLLER TO MPIA - 23'
JB4 TO MPIB - 9'

WIRED CONDUIT (1½") (PVC)
JBI TO JB2 - 164'
JB2 TO JB3 - 159'
JB3 TO CONTROLLER - 81'

WIRED CONDUIT (1½") (PVC) (CONT.)
PB2 TO PPIIB - 41'
PPIA TO PB2 - 3'
PB2 TO JB5 - 132'
JB5 TO JB6 - 150'
JB6 TO JB7 - 151'
JB7 TO JB8 - 151'
JB8 TO JB9 - 148'
JB9 TO JBIO - 133'
JBIO TO MONOTUBE SIGN BRIDGE - 24'

0 20 40
SCALE IN FEET

CAMERA EXTENSION BRACKET FOR MAST ARM AND MONOTUBE SIGN BRIDGE

N.T.S.

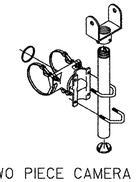

TWO PIECE CAMERA MOUNT
TUBE LENGTHS: 23", 37", 46", OR 74"
BAND LENGTHS: 29", 36", 42", 48", OR 56"

Notes:

All assemblies shall have steel fasteners and stainless steel clamp screw kits.

1or 2 piece bracket mounts shall be specified for camera type.

TABLE OF CHANGE SEQUENCE

FACE	Ø4 + Ø8 R/W	Ø4 + Ø8 CLEAR TO ALL OTHER PHASES		Ø2 + Ø6 R/W	Ø2 + Ø6 CLEAR TO ALL OTHER PHASES		FLASHING OPERATION
4	⊘	⊘	R	R	R	R	FY
6	R	R	R	G	Y	R	FR
P	DW	DW	DW	W	DW	DW	B

NOTE: W = WALK, FD = FLASHING DON'T WALK
DW = DON'T WALK, B = BLANK

PREEMPTION SETTINGS

	PREEMPT I	PREEMPT I
PRIORITY	NO	NO
DET. LOCK	YES	YES
DELAY	0	0
ALT. MIN. GRN	5	5
ALT. YELLOW	PARENT	PARENT
ALT. RED	PARENT	PARENT
ALT. PED. CLR.	PARENT	PARENT
HOLD GREEN	15	15
HOLD YELLOW	3.0	4.0
HOLD RED	2.5	2.0
HOLD PHASE	4	2
EXIT PHASE	2	4
EXIT CALL	NONE	NONE

CONTROLLER TIMING CHART

LOCAL PROGRAMING	PHASE 1	2	3	4	5	6	7	8	9
MINIMUM GREEN		15		9					
EXTENSION		2.0		2.0					
YELLOW CLEARANCE		4.0		3.0					
ALL RED CLEARANCE		2.0		2.5					
MAXIMUM GREEN I-75 SEC		39		24					
MAX. GREEN II-75 SEC 0600 - 0900		28		34					
MAX. GREEN III-75 SEC 1500 - 1800		37		26					
MAX. GREEN IV-75 SEC RAMP		23		40					
WALK		7		-					
FLASHING DON'T WALK		8		-					
RECALL		MAX		MAX					
MEMORY		N/L		N/L					

NOTE: INCLUDE BACKPLATES ON ALL SIGNAL FACES.

SIGNAL FACE ARRANGEMENT 12" LENSES

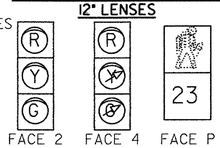

PHASING DIAGRAM EXIT 14 W - RAMP "C" AT ROUTE 2 (WILLISTON ROAD)

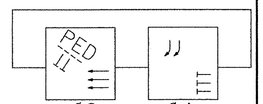

COORDINATION TIMING (SECONDS)

DIAL SPLIT	CYCLE LENGTH	PHASES 1	2	3	4	5	6	7	8	OFFSETS SEC	%
1 - 1	75		36		39					20	27
2 - 1	75		43		32					30	40
3 - 1	75		34		41					13	17

1 - 1	WEEKDAYS - 0600 - 0900
2 - 1	WEEKDAYS - 1500 - 1800
3 - 1	WEEKDAYS - 0900 TO 1500, 1800 TO 2300
3 - 1	SAT. & SUN. - 0600 TO 2300

FOR ALL OTHER TIMES, THE INTERSECTION SHALL OPERATE IN FREE MODE.

EXISTING	NEW	LEGEND
		MAST ARM POLE (MP)
		STRAIN POLE (SP)
		CONTROLLER CABINET
		PULLBOX (PB)/ JUNCTION BOX (JB)
		SIGNAL HEAD
		CONDUIT
		VEHICLE LOOPS
		PEDESTAL POST (PP)
		MAST ARM MOUNTED SIGN
		STANCHION
		VIDEO DETECTOR
		VIDEO DETECTION AREA
		OPTICAL DETECTOR

TRAFFIC SIGNAL SHEET NO. 2

PROJECT NAME: SOUTH BURLINGTON
PROJECT NUMBER: IM 089-3(37)

FILE NAME: z03al78trfbdr.dgn
PROJECT LEADER: KEN UPMAL
DESIGNED BY: V. KACOYANNAKIS
PLOT DATE: 5/16/2006
DRAWN BY: V. KACOYANNAKIS
CHECKED BY: J. FORD
SHEET 68 OF 99

TRAFFIC SIGNAL NOTES

A. NEW TRAFFIC SIGNAL EQUIPMENT

1. ALL SIGNAL HEADS SHALL BE RIGIDLY MOUNTED. ALL LENSES SHALL BE LED UNLESS SPECIFIED ON THE PLANS TO BE OPTICALLY PROGRAMMED. ALL SIGNAL HEADS SHALL INCLUDE DISCONNECT HANGERS (WHERE NEEDED), AND BACKPLATES SHALL BE INCLUDED AS SPECIFIED ON THE PLANS.

2. ALL CONTROLLERS SHALL BE ECONOLITE BRAND, MODEL ASC/2S-2100 (TS-2 TYPE 2). ALL CABINETS TO BE GROUND MOUNTED AND SHALL BE TYPE P.

3. A DISCONNECT BREAKER FOR EACH CIRCUIT SHALL BE INSTALLED IN A RAINPROOF (NEMA 3R), LOCKED CABINET ON A STANCHION OR ON THE SIDE OF THE STRAIN POLE NEXT TO OR BELOW THE METER SOCKET (SEE STD E-175). A SEPARATE CIRCUIT BREAKER SHALL BE INSTALLED FOR ROADWAY LIGHTING, IF APPLICABLE.

4. PUSHBUTTONS AND PEDESTRIAN SIGNS SHALL BE PROVIDED WITH ALL PROPOSED PEDESTRIAN SIGNALS.

5. PEDESTRIAN PEDESTAL POSTS SHALL BE LOCATED 1.0' BEHIND SIDEWALK UNLESS OTHERWISE SPECIFIED ON THE PLANS.

6. ALL PEDESTRIAN PUSHBUTTONS SHALL COMPLY WITH ADA STANDARDS AND THE SPECIFICATIONS.

B. SIGNAL OPERATION

1. SWITCH-OVER FROM EXISTING TO REPLACEMENT SIGNALS SHALL NOT BE DONE DURING PEAK TRAFFIC PERIODS. UNIFORMED TRAFFIC OFFICERS SHALL CONTROL TRAFFIC DURING SWITCH-OVER.

C. PULLBOXES AND JUNCTION BOXES FOR TRAFFIC SIGNALS

1. PULLBOXES/JUNCTION BOXES ARE DETAILED ON STD E-173.

2. THE LOGO ON THE PULLBOXES/JUNCTION BOXES SHALL BE "SIGNAL".

D. TRAFFIC SIGNAL CONDUIT

1. ALL TRAFFIC SIGNAL CONDUIT SHALL BE PVC UNLESS OTHERWISE SPECIFIED.

2. MINIMUM CONDUIT SIZES SHALL BE:
   A) 1½" FOR INTERCONNECT CABLE AND LOOP WIRE.
   B) 2" FOR SHIELDED LEAD-IN CABLE, SIGNAL CABLE, POWER CABLE AND ALL OTHERS, UNLESS SPECIFIED OTHERWISE ON THE PLANS. SEE CHART ON STD E-172 FOR DESIGN VALUES.

3. WHEN CONDUIT IS PLACED BELOW THE ROADWAY OR ACROSS SIDE ROADS, IT SHALL BE PLACED IN AN ELECTRICAL CONDUIT SLEEVE (8") (PVC).

4. EXISTING CONDUIT MAY BE PRESENT AT THE INTERSECTION OF U.S. ROUTE 2 AND THE SHERATON DRIVEWAY. INFORMATION ON SIZE AND LOCATION IS UNAVAILABLE AT THIS TIME. THE CONTRACTOR MAY UTILIZE EXISTING CONDUIT FOR WIRE RUNS IN LIEU OF INSTALLING NEW CONDUIT PROVIDED THE CONTRACTOR LOCATES THE EXISTING CONDUIT DURING CONSTRUCTION AND IT IS IN GOOD CONDITION AND OF ADEQUATE SIZE FOR THE REQUIRED WIRING. ALL EXISTING CONDUITS TO BE REUSED UNDER THIS PROJECT SHALL BE APPROVED BY THE ENGINEER PRIOR TO INSTALLATION. THE INSTALLATION OF SIGNAL WIRING IN EXISTING CONDUIT SHALL BE PAID FOR UNDER ITEM 678.24 - ELECTRICAL WIRING.

E. VEHICLE LOOP DETECTORS - SEE STD E-172.

1. LOOPS SHALL EXTEND 6' AHEAD OF STOP BAR UNLESS OTHERWISE NOTED ON THE PLANS.

F. REMOVAL OF EXISTING OR REUSE OF SALVAGED TRAFFIC SIGNAL EQUIPMENT

1. AT THE DISCRETION OF THE CITY OF SOUTH BURLINGTON, REMOVED AND NOT REUSED TRAFFIC SIGNAL EQUIPMENT SHALL BE DELIVERED TO THE CITY OF SOUTH BURLINGTON GARAGE. UNWANTED TRAFFIC SIGNAL EQUIPMENT MUST BE DISPOSED OF BY THE CONTRACTOR. REMOVAL OF TRAFFIC SIGNAL EQUIPMENT SHALL INCLUDE REMOVAL OF CONCRETE BASES OR CUTTING BASES ONE FOOT BELOW GRADE, AND BACKFILLING OF THE HOLES. ANY TRAFFIC SIGNAL EQUIPMENT THAT IS DAMAGED OR LOST BY THE CONTRACTOR DURING REMOVAL SHALL BE REPAIRED OR REPLACED, TO THE SATISFACTION OF VTRANS AT THE CONTRACTOR'S EXPENSE. THE CONTACT PERSON FOR THE CITY OF SOUTH BURLINGTON SHALL BE BRUCE HOAR, DIRECTOR OF PUBLIC WORKS, (802) 658-7961.

2. ALL SALVAGED OR REUSED TRAFFIC SIGNAL EQUIPMENT SHALL BE THOROUGHLY CLEANED AND PAINTED AS REQUIRED, BEFORE REUSE.

3. IT IS ASSUMED THAT ALL EXISTING LOOPS AND SIGNAL CABLE WHICH ARE TO BE USED IN THE PROPOSED SIGNAL DESIGN ARE IN GOOD CONDITION AND WORKING PROPERLY. ANY LOOPS OR CABLES FOUND NOT TO BE IN GOOD WORKING ORDER SHALL BE REPLACED BY THE CONTRACTOR. PAYMENT FOR THIS WORK SHALL BE PAID AT THE UNIT PRICE BID FOR THAT ITEM.

G. GENERAL

1. THE CONTRACTOR SHALL ACQUIRE ALL NECESSARY LOCAL PERMITS AND MAKE ALL NECESSARY ARRANGEMENTS WITH THE UTILITY COMPANY TO PROVIDE A PERMANENT POWER SUPPLY TO THE SIGNAL AND STREET LIGHTING EQUIPMENT, IF APPLICABLE. THE ROUTING OF POWER TO THE INTERSECTION SHALL BE SUCH THAT VTRANS HAS FULL RESPONSIBILITY FROM THE TRANSFORMER THROUGH THE SIGNAL. NO INTERVENING OWNERSHIP/RESPONSIBILITY SHALL BE ALLOWED.

2. A METAL PLAQUE LISTING OWNERSHIP AND EMERGENCY PHONE NUMBERS SHALL BE ATTACHED TO THE OUTSIDE OF THE CONTROLLER CABINET. CONTACT THE VTRANS DISTRICT OFFICE TO VERIFY APPROPRIATE PHONE NUMBERS.

H. COORDINATION, ETC.

1. A 14 GUAGE NO.7 WIRE SHALL BE USED AS THE INTERCONNECT CABLE BETWEEN RAMP "C" AND THE SHERATON DR. FOR SIGNAL COORDINATION. THE INTERCONNECT CABLE SHALL BE INSTALLED UNDERGROUND IN NEW CONDUIT.

2. THE INTERCONNECT CABLE SHIELD MUST BE GROUNDED AT EACH LOCATION OR WHERE EVER THE OUTSIDE INSULATION IS BROKEN.

3. THE CONTRACTOR SHALL COORDINATE WITH THE BOTH THE CITY OF BURLINGTON AND THE CITY OF SOUTH BURLINGTON BEFORE WORKING AT THE INTERSECTION OF THE SHERATON DRIVEWAY AND U.S. ROUTE 2.

TRAFFIC CONTROL NOTES FOR TRAFFIC SIGNAL WORK

1. THE FOLLOWING NOTES APPLY TO TRAFFIC CONTROL NECESSARY FOR THE INSTALLATION OR MODIFICATION OF THE TRAFFIC SIGNALS ONLY. FOR OVERALL PROJECT TRAFFIC CONTROL MANAGEMENT REQUIREMENTS REFER TO SHEETS 73-81 AND SECTION 641 OF THE CONTRACT SPECIAL PROVISIONS.

2. DURING CONSTRUCTION, A MINIMUM OF ONE-WAY TRAFFIC SHALL BE MAINTAINED AT ALL TIMES. TWO-WAY TRAFFIC SHALL BE MAINTAINED AT NIGHT, ON WEEKENDS AND HOLIDAYS. DURING PEAK TRAFFIC AND WHENEVER POSSIBLE DURING CONSTRUCTION, AT THE DISCRETION OF THE RESIDENT ENGINEER (OR OTHER DESIGNATED AGENCY REPRESENTATIVE), UNIFORMED TRAFFIC CONTROL OFFICERS OR TRAINED FLAG PERSONS SHALL DIRECT TRAFFIC, WHENEVER REQUIRED.

3. TRAFFIC CONTROL SIGNING AND CHANNELIZING DEVICES SHALL BE IN ACCORDANCE WITH THE APPROPRIATE STANDARD DRAWINGS AND THE MUTCD (E-101, E-102, E-106, E-107, E-110, E-111).

4. AFTER SIGNAL INSTALLATION, ALL HEADS MUST BE COVERED (TURNING SHALL NOT BE ALLOWED) UNTIL TURN ON. THE METHOD OF COVERING SHALL BE AS FOLLOWS:

   ALL NEW TRAFFIC AND PEDESTRIAN SIGNAL HEADS WHICH HAVE BEEN INSTALLED BUT NOT PLACED IN EITHER FLASHING OR FULL OPERATION SHALL BE COVERED. EXISTING SIGNAL HEADS WHICH ARE PLACED OUT OF SERVICE IN ORDER TO PERFORM WORK ON THE SIGNAL SYSTEM SHALL ALSO BE COVERED, EXCEPT WHEN SUCH WORK CAN BE COMPLETED IN A RELATIVELY SHORT PERIOD OF TIME (SEVERAL HOURS) AND TRAFFIC CONTROL HAS BEEN PROVIDED FOR.

   THE SIGNAL COVERS SHALL CONSIST OF A ONE PIECE PLASTIC BAG HAVING A MINIMUM THICKNESS OF 4 MIL. THE BAG SHALL BE OPAQUE. THE COVER SHALL SLIP OVER THE ENTIRE SIGNAL HEAD AND SHALL BE SECURELY TIED AT THE OPENING WITH A ROPE OF SUFFICIENT SIZE AND STRENGTH TO SECURE THE COVER. AN INTERMEDIATE ROPE OF THE SAME MATERIAL SHALL BE DRAWN AROUND THE CENTER OF THE COVER TO PREVENT EXCESS FLAPPING IN THE WIND.

   A DRAIN HOLE SHALL BE MADE AT THE BOTTOM OF THE BAG TO ALLOW THE ESCAPE OF MOISTURE. NO TAPE OR ADHESIVE WILL BE ALLOWED TO BE ATTACHED TO ANY SURFACE OF THE SIGNAL HOUSING OR LENSES. ALL COVERS SHALL BE PLACED IN A NEAT WORKMANLIKE MANNER. ANY COVER WHICH IS TORN OR MISSING SHALL BE IMMEDIATELY REPLACED. PAYMENT FOR THE COVERS, THEIR PLACEMENT, AND REMOVAL AND ALL INCIDENTALS FOR COMPLETION OF THE WORK SHALL BE CONSIDERED INCIDENTAL TO THE INSTALLATION OF THE TRAFFIC SIGNAL.

5. WHERE TWO-WAY TRAFFIC IS MAINTAINED DURING CONSTRUCTION, THE SIGN PACKAGE SHOWN ON STD E-110 SHOULD BE USED. FOR ONE-WAY TRAFFIC, E-110 APPLIES. APPROACH CONSTRUCTION SIGNING SHALL REMAIN IN PLACE DURING THE ENTIRE CONSTRUCTION PERIOD. OTHER SIGNING SHALL BE REMOVED OR COVERED WHEN NOT APPLICABLE.

6. VARIATIONS IN THE SIGNING PACKAGES MAY BE DICTATED BY UNIQUE GEOMETRY AND/OR TRAFFIC CONDITIONS.

7. THE CONTRACTOR SHALL NOT WORK WITHIN THE HIGHWAY ROW WITHOUT THE APPROPRIATE CONSTRUCTION SIGNING IN PLACE AS SHOWN ON STD E-100.

8. AT LOCATIONS WHERE SIGNALS CURRENTLY EXIST, A WORKING SIGNAL SYSTEM SHALL BE IN PLACE AT THE END OF EACH DAY. IF THE SIGNAL SYSTEM IS NOT WORKING AT THE END OF THE DAY, THE CONTRACTOR SHALL PROVIDE UNIFORMED TRAFFIC OFFICERS TO CONTROL TRAFFIC UNTIL SUCH TIME THAT THE EXISTING OR NEW SIGNAL IS IN OPERATION AT NO COST TO THE STATE.

9. SIGNAL UNDER CONSTRUCTION" SIGN PANELS SHALL BE MOUNTED UNDER "ROAD CONSTRUCTION AHEAD" SIGNS ANYTIME SIGNAL SYSTEM WORK IS BEING PERFORMED (SEE SIGN DETAIL THIS SHEET).

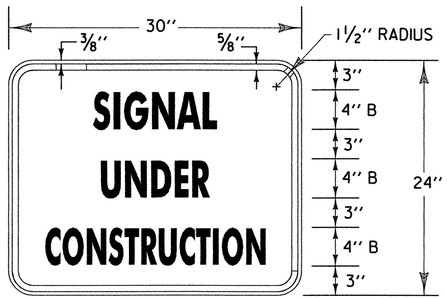

MATERIALS: SEE STD. E-144M
COLORS: TEXT & BORDER - BLACK
BACKGROUND - ORANGE (REFL. ENCAPSULATED LENS)

CONSTRUCTION SIGN DETAIL
NOT TO SCALE

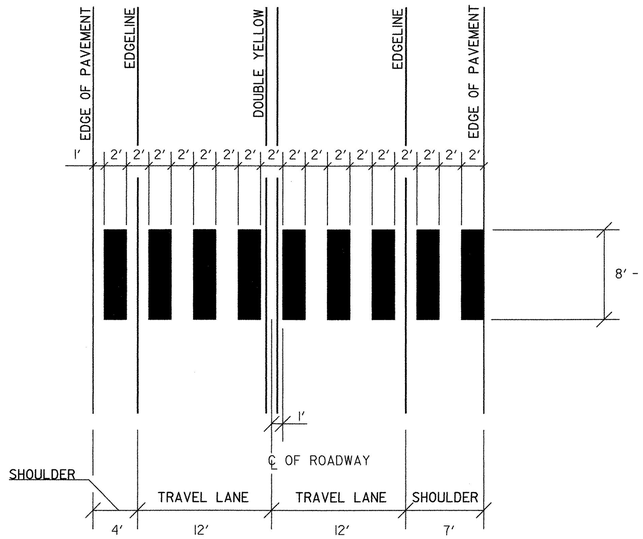

ADJUST SPACING (1 - 2 FT) TO AVOID WHEEL PATHS

BLOCK TYPE CROSSWALK DETAIL

TRAFFIC SIGNAL SHEET #3

PROJECT NAME:	SOUTH BURLINGTON
PROJECT NUMBER:	IM 089-3(37)

FILE NAME: z03al78trfbdr.dgn	PLOT DATE: 5/5/2006
PROJECT LEADER: KEN UPMAL	DRAWN BY: V. KACOYANNAKIS
DESIGNED BY: V. KACOYANNAKIS	CHECKED BY: J. FORD
	SHEET 69 OF 99

CANTILEVER SIGNAL AND SIGN SUPPORT NOTES

1. ALL MATERIALS AND CONSTRUCTION SHALL CONFORM TO THE STATE OF VERMONT AGENCY OF TRANSPORTATION'S "STANDARD SPECIFICATIONS FOR CONSTRUCTION", DATED 2001, WITH CURRENT SPECIFICATIONS.
2. OVERHEAD SIGN/SIGNAL SUPPORTS SHALL CONFORM TO AASHTO'S PUBLICATION ENTITLED "STANDARD SPECIFICATIONS FOR STRUCTURAL SUPPORTS FOR HIGHWAY SIGNS, LUMINARIES, AND TRAFFIC SIGNALS", DATED 2001, OR ITS LATEST REVISIONS.
3. ADDITIONAL DESIGN CRITERIA ARE AS FOLLOWS:
   CONCRETE FC = 1400 PSI F'C = 3 500 PSI, CLASS B
   REINFORCING FS = 24 000 PSI (GRADE 60)
   FOOTING SOIL PRESSURE: 2 125 PSI (MAXIMUM)
   WIND LOAD AND ICE LOAD PER AASHTO "STANDARD SPECIFICATIONS"
4. ANCHOR BOLTS
   FOUR STAINLESS STEEL ANCHOR BOLTS WITH TWO HEXAGON NUTS, ONE WASHER AND ONE LOCK WASHER PER BOLT SHALL BE FURNISHED WITH EACH POLE. SEE SUBSECTION 714.09.
5. FLANGE BOLTS
   ALL FLANGE BOLTS AND HEX NUTS SHALL BE HIGH STRENGTH STEEL AND SHALL CONFORM TO AASHTO M 164, TYPE 1 BOLTS, GALVANIZED PER AASHTO M 232 SPECIFICATION, THE FLANGE BOLTS SHALL BE CAPABLE OF RESISTING 133% OF THE FULL DESIGN STRESS OF THE TUBE AT ITS YIELD STRENGTH STRESS.
6. HORIZONTAL AND VERTICAL MEASURES
   STEEL TUBES SHALL BE FORMED AND WELDED WITH ONE CONTINUOUS LONGITUDINAL WELD ONLY. AFTER FORMING AND WELDING THEY SHALL BE COLD ROLLED TO ENSURE UNIFORMITY OF SIZE AND SMOOTHNESS OF WELD. THEY SHALL HAVE A MINIMUM YIELD STRENGTH OF AT LEAST 48 KSI. THERE SHALL BE NO TRANSVERSE WELDING EXCEPT AT THE FLANGE CONNECTIONS AND POLE BASE PLATES, WHERE THE TUBES SHALL TELESCOPE THE FLANGES AND PLATES AND BE CONTINUOUSLY WELDED BOTH SIDES INSIDE AND OUT TO WITHSTAND THE FULL TRANSFER OF THE BENDING STRENGTH TO THE BOLTS. OPTIONALLY, THE MEMBERS MAY BE A SERIES OF TWO OR THREE DIFFERENT DIAMETER PIPES WELDED TOGETHER.
7. GALVANIZING
   ALL STEEL COMPONENTS, EXCEPT CONCRETE REINFORCING AND STAINLESS STEEL HARDWARE AND FLANGE FASTENERS, ARE TO BE HOT DIPPED GALVANIZED IN ACCORDANCE WITH AASHTO M 111 AFTER FABRICATION. THE ASSEMBLIES SHALL BE DESIGNED AND FABRICATED TO PERMIT GALLON ALL INTERIOR AND EXTERIOR SURFACES AND SHALL BE FREE OF POCKETS AND OTHER STRUCTURAL OBSTRUCTIONS THAT WILL NOT PERMIT PROPER DEPOSITION OF ZINC COATING.
8. WELDING
   A. ALL DESIGN DETAILS, WORKMANSHIP, PROCEDURES AND INSPECTION SHALL CONFORM WITH SUBSECTION 506.10.
   B. ALL WELDS SHALL BE AT LEAST AS STRONG AS THE MATERIAL(S) BEING WELDED.
9. FOOTINGS
   A. FOOTINGS SHALL BE DESIGNED TO RESIST LOADS EQUAL TO OR GREATER THAN THE MAXIMUM LOADS THAT THE POLE IS DESIGNED FOR.
   B. THREE TYPES OF FOUNDATIONS, AS OUTLINED IN AASHTO "STANDARD SPECIFICATIONS" (SEE NOTE 2) SECTION 1.8.2 (C) SHALL BE ALLOWED.
      1. DRILLED SHAFTS
      2. SPREAD FOOTINGS
      3. PILES
   C. DRILLED SHAFT FOOTINGS SHALL BE POURED IN DRILLED SHAFTS AGAINST UNDISTURBED MATERIAL. THE TOP 2' OF SOIL SHALL BE NEGLECTED FOR DESIGN PURPOSES. THE MAXIMUM FOOTING DIAMETER SHALL BE 36", AND THE MAXIMUM DEPTH SHALL BE 12'. IF THESE LIMITS ARE EXCEEDED OR IF THE SOIL IS NOT CAPABLE OF BEARING PRESSURE OF 2 125 PSI, A SPREAD FOOTING SHALL BE USED.
   D. AS AN ALTERNATIVE TO THE DRILLED HOLES, FOOTINGS MAY BE POURED IN EXCAVATED HOLES USING THE PROPER FORMS, WHICH MUST BE REMOVED. THE EXCAVATED HOLES SHALL BE AT LEAST 2' CLEAR OF THE FOOTING. THE BACKFILL MATERIAL SHALL BE COMPACTED AS DESCRIBED IN SUBSECTION 204.12. DESIGN LIMITS AS FOR AUGERED FOOTING APPLY.
   E. WHEN THE DESIGN DEPTH OF A FOOTING CANNOT BE OBTAINED DUE TO UNFORESEEN FIELD CONDITIONS, THE CONTRACTOR SHALL NOTIFY THE ENGINEER AND OBTAIN A REVISED FOOTING DETAIL FROM THE ENGINEER.
   F. ANY BACKFILL PLACED ADJACENT TO THE FOOTING SHALL BE GRANULAR MATERIAL MEETING THE REQUIREMENTS FOR GRANULAR BACKFILL FOR STRUCTURES, SUBSECTION 704.08. CONCRETE FOR FOOTING SHALL CONFORM TO THE REQUIREMENTS OF CONCRETE, CLASS B, SECTION 501, STRUCTURAL CONCRETE. GROUT MATERIAL SHALL BE NON-SHRINKING MORTAR CONFORMING TO SUBSECTION 707.03 (MORTAR TYPE IV).
   G. SIGNALS/SIGNS SHALL BE MOUNTED AND LEVELED AND POLES SHALL BE PLUMB PRIOR TO PLACING GROUT UNDER POLE BASE.
10. SHOP DRAWINGS (6 COPIES OF EACH) SHALL BE SUBMITTED TO THE STATE OF VERMONT, AGENCY OF TRANSPORTATION, PROJECT MANAGER FOR APPROVAL, PRIOR TO FABRICATION. THE SHOP DRAWINGS SHALL INCLUDE THE FOLLOWING INFORMATION AND SHALL BE STAMPED BY A REGISTERED PROFESSIONAL ENGINEER IN THE STATE OF VERMONT:
    A. DETAILED DRAWING OF EACH COMPONENT OF THE STRUCTURE.
    B. MATERIAL SPECIFICATIONS FOR EACH COMPONENT OF THE STRUCTURE, EITHER BY COMPLETE SPECIFICATION OR REFERENCE TO APPLICABLE ASTM STANDARDS.
    C. NOTATION OF PROJECT NAME, PROJECT NUMBER, ROUTE NUMBER AND POLE NUMBER TO BE INCLUDED ON EACH SHEET.
    D. DETAILS FOR LOCATION OF SIGNS/SIGNALS AND ATTACHMENT HARDWARE FOR THE SUPPORT STRUCTURE.
    E. ALL ELEVATIONS AND DIMENSIONS NECESSARY TO PROVIDE A COMPLETE SET OF RECORD PLANS.
    F. DEAD LOAD DEFLECTION AND CAMBER INFORMATION.
    G. WELDING DETAILS AND PROCEDURES ARE REQUIRED FOR ALL WELDS. PROCEDURES SHALL BE SUBMITTED FOR APPROVAL WITH REFERENCE TO EACH WELD IDENTIFIED ON THE SHOP DRAWINGS (SEE SUBSECTION 506.10).
11. EACH OVERHEAD TRAFFIC SIGNAL/SIGN SUPPORT SHALL BE GROUNDED. THE GROUND SHALL CONSIST OF:
    A. AN INTERNAL GROUND LUG OPPOSITE THE HAND HOLE.
    B. A 6 AWG (MIN.) SOFT DRAWN COPPER GROUNDING ELECTRODE CONDUCTOR.
    C. A $\frac{5}{8}$ INCH X 8 FT (MIN.) COPPER CLAD GROUNDING ELECTRODE. THE RESISTANCE TO GROUND SHALL BE 25 OHMS OR LESS. ADDITIONAL GROUNDING ELECTRODES MAY BE REQUIRED (MINIMUM SPACING SHALL BE 6 FT).

    WHEN A POWER SERVICE, METER AND DISCONNECT ARE ATTACHED TO A POLE, THERE SHALL BE A CONTINUOUS GROUND WIRE FROM THE METER AND DISCONNECT WHICH MAY RUN INTERNAL TO THE UPRIGHT, THROUGH THE $\frac{1}{2}$ INCH FLEXIBLE TUBING IN THE CONCRETE BASE TO THE REQUIRED GROUNDING ELECTRODE(S). THE GROUND WIRE FROM THE POLE GROUNDING LUG, CONTROLLER CABINET AND/OR LUMINAIRE MAY ATTACH TO THIS CONTINUOUS CABINET AND/OR LUMINAIRE MAY ATTACH TO THIS CONTINUOUS GROUNDING ELECTRODE CONDUCTOR FROM THE SERVICE METER AND DISCONNECT. THE CONTRACTOR SHALL PERFORM A RESISTANCE TO GROUND TEST ON THE CONTINUOUS GROUNDING ELECTRODE CONDUCTOR FROM THE SERVICE METER AND DISCONNECT AND PROVIDE A WRITTEN STATEMENT TO THE AREA ELECTRICAL INSPECTOR THAT THE GROUNDING ELECTRODE CONDUCTOR IS CONTINUOUS FROM THE SERVICE METER AND DISCONNECT AND THE RESISTANCE TO GROUND IS 25 OHMS OR LESS.
12. THE COST OF OVERHEAD TRAFFIC SIGN SUPPORTS, INCLUDING ALL HARDWARE, SIGN BRACKETS, AND FOOTING, SHALL BE INCLUDED IN THE UNIT BID PRICE FOR ITEM 677.12. THE COST OF TRAFFIC CONTROL SIGNAL SYSTEMS INCLUDING ALL HARDWARE, BRACKETS, FOOTINGS, LUMINAIRE AND LUMINAIRE ARMS SHALL BE INCLUDED IN ITEM 678.15. THE COMPONENTS SHALL CONFORM TO ALL APPLICABLE PROVISION OF SECTION 677, 678, AND 679.
13. HORIZONTAL MEMBERS SHALL BE CAMBERED AND THE VERTICAL POLES BACKRAKED (WHERE APPLICABLE) TO THE ANTICIPATED DEAD LOAD DEFLECTION PLUS THE CAMBER, IF ANY, SPECIFIED ON THE PLANS.
14. AN EQUIVALENT ALTERNATE DESIGN MAY BE SUBSTITUTED FOR THE DETAILS AND MATERIALS SHOWN.
15. THE DETAILS OF DESIGN FOR THE STRUCTURE AND FOOTINGS ARE TO BE SUPPLIED BY THE CONTRACTOR AND/OR BY THE MANUFACTURER. THE STRUCTURE SHALL BE DESIGNED TO RESIST THE MAXIMUM LOADING AS OUTLINED IN THE AASHTO STANDARD SPECIFICATIONS (SEE NOTE 2). ALL DETAILS OF THE STRUCTURE AND THE FOOTING SHALL BE CHECKED AND STAMPED BY A STRUCTURAL ENGINEER REGISTERED IN THE STATE OF VERMONT PRIOR TO SUBMITTAL OF THE SHOP DRAWINGS TO THE VERMONT AGENCY OF TRANSPORTATION, PROJECT MANAGER.
16. IN ADDITION TO THE SHOP DRAWINGS OUTLINED IN NOTE 10, THE CONTRACTOR SHALL SUBMIT ALL DESIGN CALCULATIONS TO THE VERMONT AGENCY OF TRANSPORTATION, PROJECT MANAGER, SHOWING THE FOLLOWING INFORMATION FOR EACH OF THE VERTICAL AND HORIZONTAL COMPONENTS OF THE STRUCTURE AND FOOTING.
    A. THE DESIGN AXIAL AND SHEAR FORCES AND BENDING AND TORSIONAL MOMENTS.
    B. THE DESIGN AXIAL, BENDING AND SHEAR STRESSES AND THE COMBINED STRESS RATIO.
    C. VIBRATION AND FATIGUE CALCULATIONS AS SET FORTH IN SECTION 9 OF THE AASHTO PUBLICATION REFERENCED IN NOTE 2.
    D. THE ALLOWABLE AXIAL, BENDING, AND SHEAR STRESSES.
    E. ITEMS A, B, D - SHALL BE SHOWN FOR EACH OF THE GROUP LOADINGS (I, II, III) AND FOR THE BASIC WIND LOAD APPLIED TO THE TWO CASES OUTLINED IN THE AASHTO STANDARD SPECIFICATIONS (SEE NOTE 2) SECTION 1.2.5.
    F. FAILURE TO SUPPLY THE PROPER DESIGN INFORMATION SHALL BE CAUSE FOR REJECTION OF THE STRUCTURE.
    G. A MINIMUM OF FOUR (4) WEEKS SHALL BE REQUIRED FOR REVIEW BY THE VERMONT AGENCY OF TRANSPORTATION.
17. THE CONTRACTOR/MANUFACTURER SHALL BE RESPONSIBLE FOR COMPLETION OF THE STRUCTURE AND FOOTING DATA ON THE DETAIL SHEET(S).
18. FOR INSTALLATIONS WHERE BOTH "EXISTING" AND "FUTURE" CONDITIONS ARE SHOWN, THE SUPPORTS SHALL BE DESIGNED FOR THE MORE SEVERE OF THE TWO LOADING CONDITIONS. THE INFORMATION OUTLINED IN NOTE 16 ABOVE SHALL BE PROVIDED FOR BOTH THE LOADING CONDITIONS.
19. THE TRAFFIC SIGNALS SHALL BE MOUNTED TO THE ARM OR POLE USING A FIXED MOUNT SYSTEM AS SHOWN ON STANDARD E-171B, UNLESS OTHERWISE NOTED ON THE CROSS SECTION SHEET.
20. BASE PLATES SHALL BE STAMPED WITH THE VERTICAL POLE DIAMETER, HEIGHT, YIELD STRENGTH, GAUGE AND THE HORIZONTAL MEMBER DIAMETER, LENGTH, YIELD STRENGTH, GAUGE. ALTERNATELY, THE INFORMATION MAY BE STAMPED ON A METAL TAG RIVETED TO THE POLE NEAR THE HANDHOLE.
21. SEE STANDARD E-171A FOR ADDITIONAL NOTES.
22. CONTRACTOR SHALL VERIFY ALL GROUND ELEVATIONS.

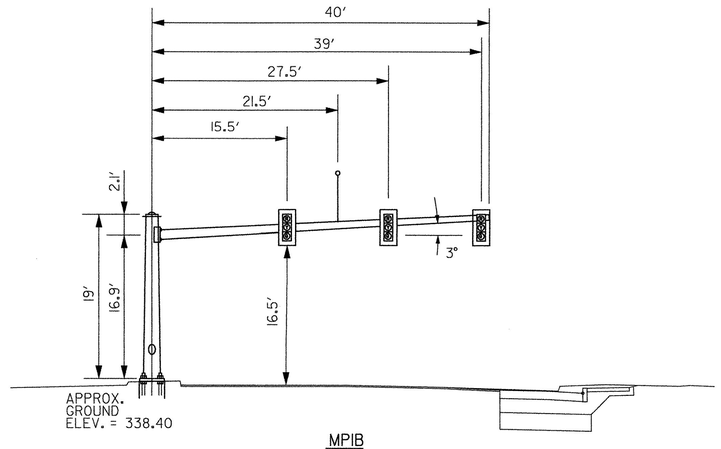

MPIB

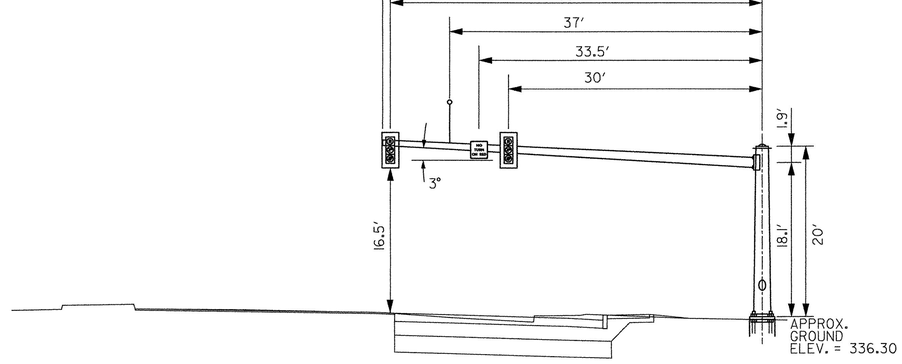

MPIA

NOTE : SEE SHEETS 71 AND 72 FOR ADDITIONAL INFORMATION AND SIGN SUPPORT CROSS-SECTIONS.

TRAFFIC SIGNAL SHEET #4

PROJECT NAME: SOUTH BURLINGTON
PROJECT NUMBER: IM 089-3(37)

FILE NAME: z03al78trfbdr.dgn
PROJECT LEADER: KEN UPMAL
DESIGNED BY: V. KACOYANNAKIS
PLOT DATE: 5/5/2006
DRAWN BY: V. KACOYANNAKIS
CHECKED BY: J. FORD
SHEET 70 OF 99

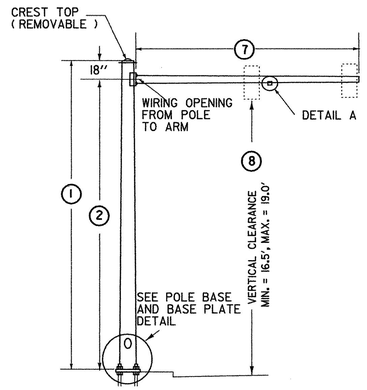

TYPE A

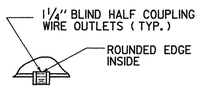

DETAIL A

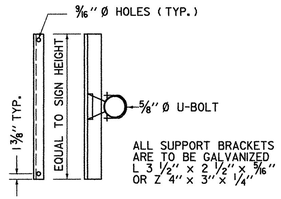

SIGN BRACKET DETAILS

ANCHOR BOLT DETAIL		
SIZE	L (IN)	T (IN)
1- 1/4" X 48"	42	8
1- 1/2" X 60"	54	9
1- 3/4" X 90"	84	9
2" X 96"	96	9

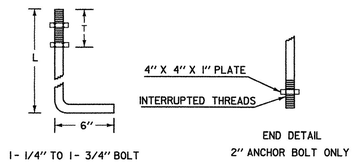

ANCHOR BOLT DETAIL

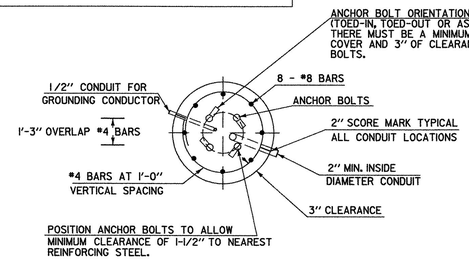

SECTION

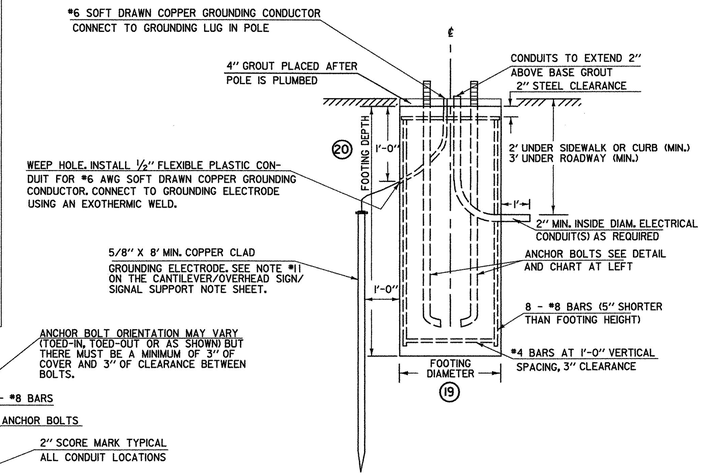

ELEVATION

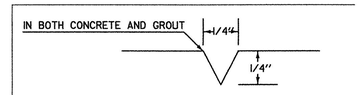

USED FOR CONDUIT LOCATION, SEE SECTION DETAIL AT LEFT

2" SCORE MARK DETAIL

CANTILEVER FOOTING DETAIL

(SPREAD FOOTINGS OR PILES ARE OPTIONAL)

POLE BASE DIAMETER (4)
POLE GAUGE (5)
POLE TAPER RATE (6)
ARM DIAMETER (11)
ARM GAUGE (12)
ARM TAPER RATE (13)

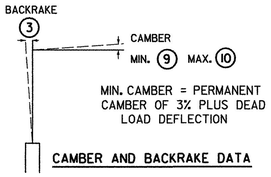

CAMBER AND BACKRAKE DATA

SEE CANTILEVER / OVERHEAD SIGN / SIGNAL SUPPORTS
NOTE SHEET FOR ADDITIONAL INFORMATION

SEE SHEET(S) FOR CROSS SECTIONS

STRUCTURE DIMENSIONS

POLE DATA								ARM DATA							LIGHTING DATA					FOOTING DATA		BASE PLATE / BOLT DATA					
POLE	TYPE	(1)	(2)	(3)	(4)	(5)	(6)	(7)	(8)	(9)	(10)	(11)	(12)	(13)	(14)	(15)	(16)	(17)	(18)	(19)	(20)	(BC)	(F)	(S)	(T)	(P)	ANCHOR BOLT SIZE
MP1A	A	20.0'	18.1'	TBBM	TBBM	TBBM	TBBM	45'	16.5'	3%	5%	TBBM	TBBM	TBBM	N/A	N/A	N/A	N/A	N/A	3	13	24"	1.41'	TBBM	TBBM	TBBM	2"
MP1B	A	19.0'	16.9'	TBBM	TBBM	TBBM	TBBM	40'	16.5'	3%	5%	TBBM	TBBM	TBBM	N/A	N/A	N/A	N/A	N/A	3	13	24"	1.41'	TBBM	TBBM	TBBM	2"

TBBM = TO BE DETERMINED BY MANUFACTURER

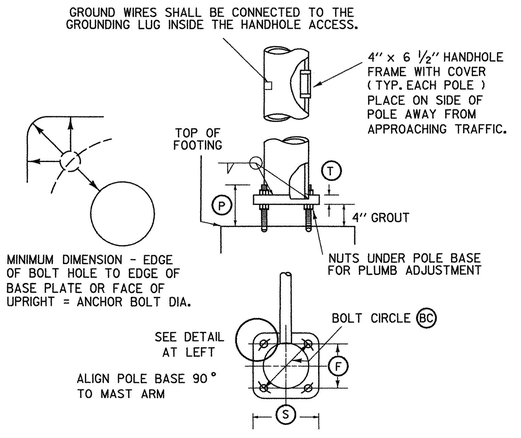

POLE BASE AND BASE PLATE DETAIL

NOTE:
DETAILS
NTS

SINGLE MAST ARM CANTILEVER / FOOTING DETAIL SHEET

PROJECT NAME: SOUTH BURLINGTON
PROJECT NUMBER: IM 089-3(37)

FILE NAME: z03al78trfbdr.dgn
PROJECT LEADER: KEN UPMAL
DESIGNED BY: V. KACOYANNAKIS
PLOT DATE: 5/5/2006
DRAWN BY: V. KACOYANNAKIS
CHECKED BY: J. FORD
SHEET 71 OF 99

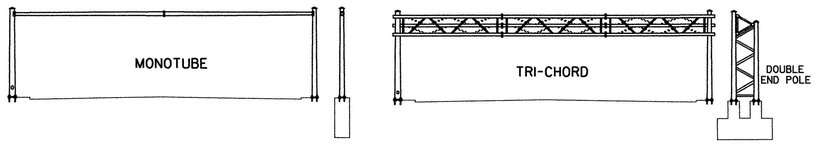

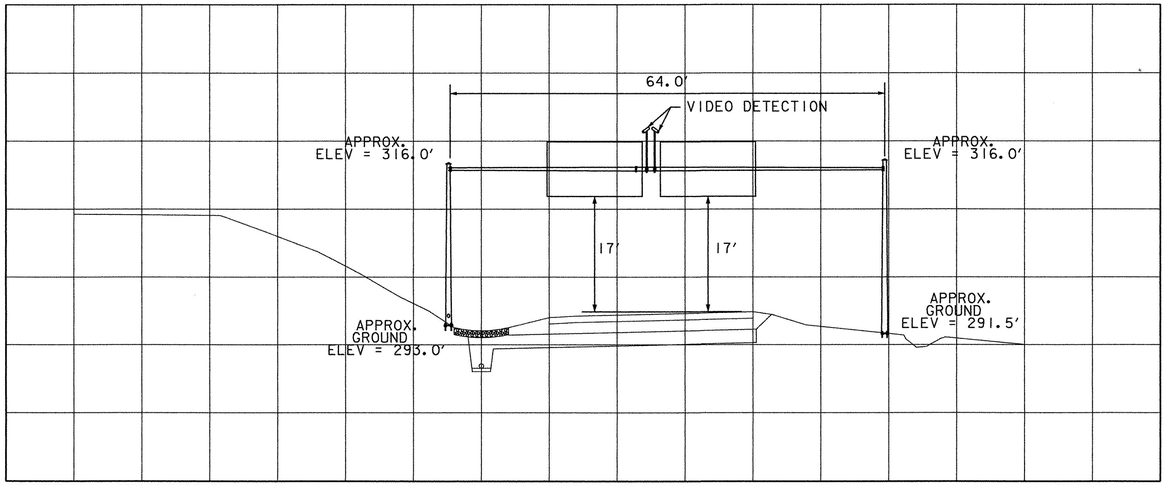

SEE SHEET 60 FOR LOCATION PLAN

OVERHEAD TRAFFIC SIGN SUPPORT STA. 52+00

CROSS -SECTION FOR ILLUSTRATION ONLY - SEE NOTE NO. 2 PROVIDED ON THIS SHEET

SCALE 1''= 10'

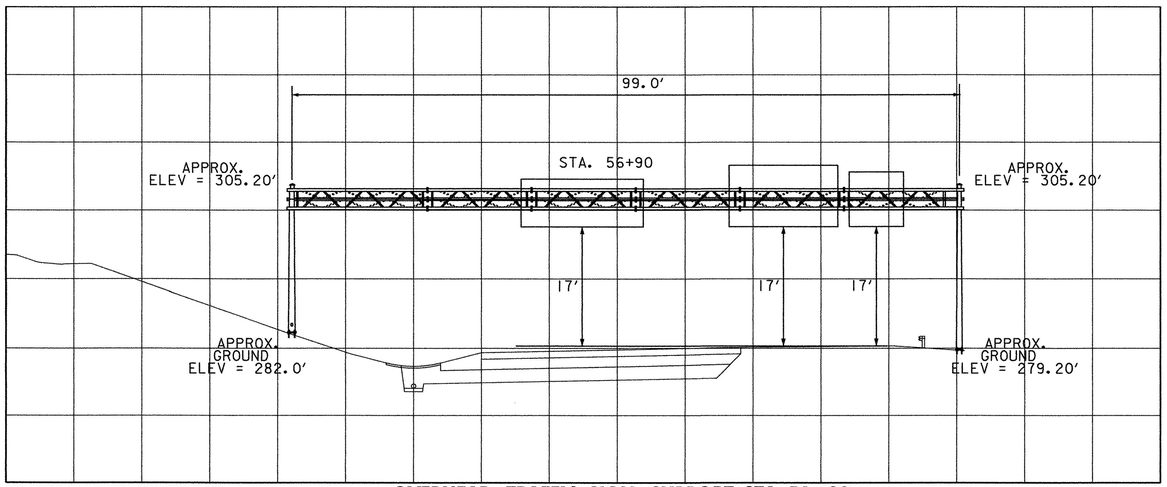

SEE SHEET 61 FOR LOCATION PLAN

OVERHEAD TRAFFIC SIGN SUPPORT STA. 56+90

CROSS -SECTION FOR ILLUSTRATION ONLY - SEE NOTE NO. 2 PROVIDED ON THIS SHEET

SCALE 1''= 10'

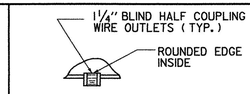

DETAIL A

ANCHOR BOLT DETAIL		
SIZE	L(IN)	T(IN)
1- 1/4" X 48"	42	8
1- 1/2" X 60"	54	9
1- 3/4" X 90"	84	9
2" X 96"	96	9

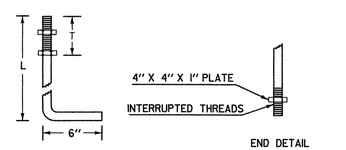

ANCHOR BOLT DETAIL

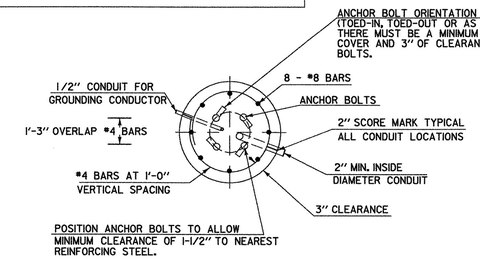

SECTION

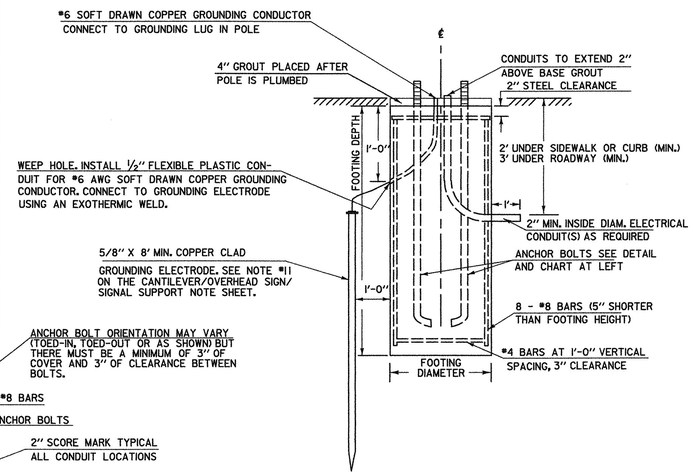

ELEVATION

OVERHEAD TRAFFIC SIGN BRIDGE FOOTING DETAIL

(SPREAD FOOTINGS OR PILES ARE OPTIONAL)

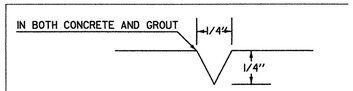

USED FOR CONDUIT LOCATION, SEE SECTION DETAIL AT LEFT

2" SCORE MARK DETAIL

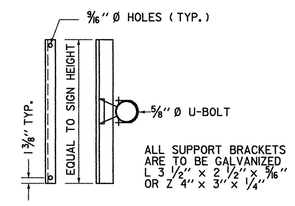

SIGN BRACKET DETAILS

NOTES:

1. SEE CANTILEVER / OVERHEAD SIGN / SIGNAL SUPPORTS NOTE SHEET FOR ADDITIONAL INFORMATION.
2. MANUFACTURER TO DETERMINE TYPE OF STRUCTURE REQUIRED.
3. MONOTUBES SHALL NOT BE USED FOR SIGNS OVER 10' IN HEIGHT.
4. MINIMUM CLEARANCE FROM SIGNS TO ANY TRAVEL LANE SHALL BE 17'.
5. CONTRACTOR SHALL VERIFY ALL GROUND ELEVATIONS.

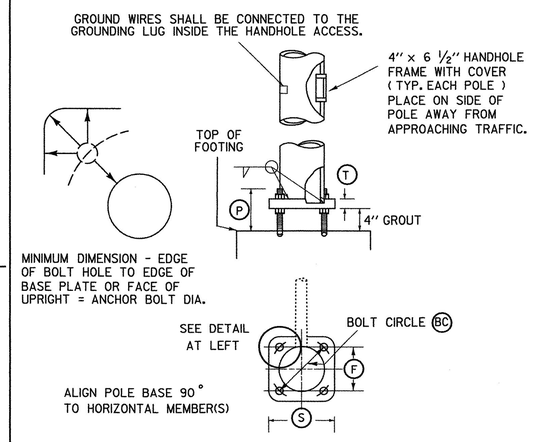

POLE BASE AND BASE PLATE DETAIL

OVERHEAD TRAFFIC SIGN BRIDGE / FOOTING DETAIL SHEET

PROJECT NAME: SOUTH BURLINGTON
PROJECT NUMBER: IM 089-3(37)

FILE NAME: z03d178trfbdr.dgn
PROJECT LEADER: KEN UPMAL
DESIGNED BY: V. KACOYANNAKIS
PLOT DATE: 5/16/2006
DRAWN BY: V. KACOYANNAKIS
CHECKED BY: J. FORD
SHEET 72 OF 99

GENERAL TRAFFIC MAINTENANCE NOTES:

1) EXCAVATION FOR GRAVEL SUBBASE AND SAND BORROW SHALL NOT EXCEED 200' IN LENGTH ALONG ROADWAY OR HALF A DAY OF WORK. AT THE END OF A WORKING DAY, BACKFILLING AND COMPACTION OF GRAVEL SUBBASE AND SAND BORROW SHALL BE COMPLETED.
2) ELEVATION DIFFERENCES BETWEEN A PORTION OF ROADWAY OPENED FOR TRAFFIC AND A PORTION OF ROADWAY CONSTRUCTED SHALL NOT EXCEED 18" DURING NON-WORKING HOURS.
3) ALL EXISTING PAVEMENT MARKINGS IN CONFLICT WITH PROPOSED TEMPORARY PAVEMENT MARKINGS SHALL BE REMOVED.
4) CONTRACTOR SHALL RELOCATE OR COVER ALL EXISTING SIGNS WHERE THEY WOULD CONFLICT WITH CONSTRUCTION SIGNAGE.
5) SEE PEDESTRIAN DETOUR PLAN ON THIS SHEET FOR PEDESTRIAN DETOUR.
6) THE CONTRACTOR SHALL BE RESPONSIBLE FOR LOCATING CONSTRUCTION SIGNAGE SO AS NOT TO INTERFERE OR OBSTRUCT THE VIEW OF EXISTING TRAFFIC CONTROL DEVICES, STOPPING SIGHT DISTANCE AND CORNER SIGHT DISTANCE.
7) ALL TEMPORARY TRAFFIC BARRIERS SHALL BE DELINEATED IN ACCORDANCE WITH THE STANDARD SPECIFICATIONS AND THE "MANUAL ON UNIFORM TRAFFIC CONTROL DEVICES".
8) PHASING WORK SHOWN HERE IS SCHEMATIC ONLY. THE CONTRACTOR SHALL BE RESPONSIBLE FOR DEVELOPING APPROPRIATE CONSTRUCTION METHODS AND APPLICABLE TRAFFIC MAINTENANCE PLANS FOR ALL TRANSITION WORK BETWEEN PHASES.
9) THE PLACING AND RELOCATING OF TEMPORARY TRAFFIC BARRIERS AND ANY WORK REQUIRING LANE CLOSURES SHALL ONLY TAKE PLACE DURING THE HOURS OF 7:00PM - 6:00AM.
10) PORTABLE MESSAGE BOARDS SHALL BE USED AS ADVANCE WARNING SIGNS. THE PLACEMENT OF THESE BOARDS SHALL BE DETERMINED BY THE ENGINEER IN THE FIELD.

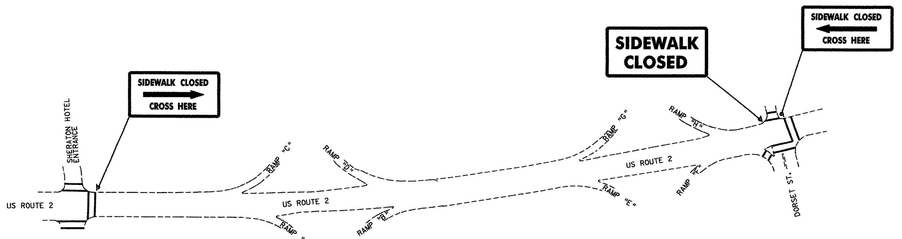

NOTE: PEDESTRIAN DETOUR SHALL BE IN PLACE FOR THE DURATION OF THE PROJECT.

PEDESTRIAN DETOUR PLAN

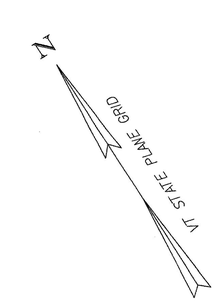

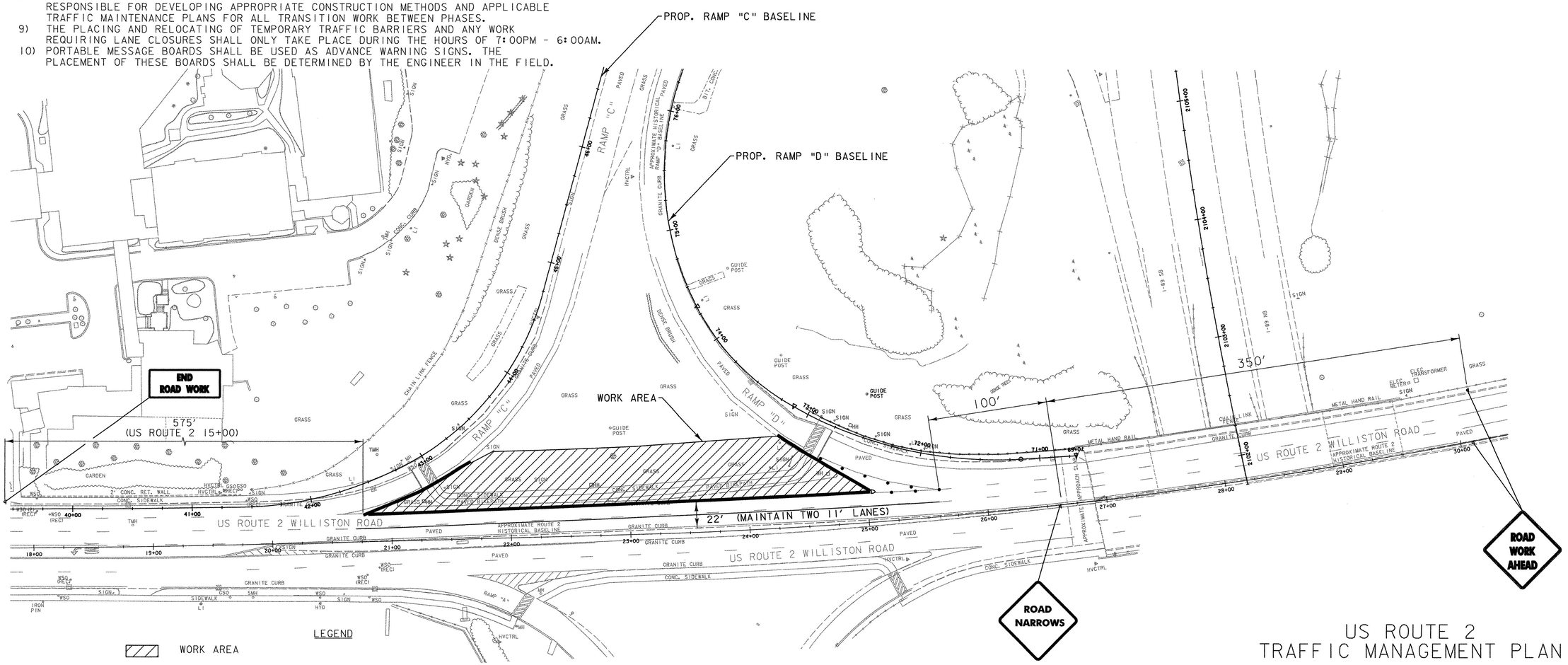

US ROUTE 2 TRAFFIC MANAGEMENT PLAN

LEGEND

- WORK AREA
- TEMPORARY WIDENING
- REFLECTORIZED DRUM
- TEMPORARY TRAFFIC BARRIER (PRECAST CONCRETE BARRIER)
- FLASHING ARROW BOARD
- IMPACT ATTENUATOR
- TEMPORARY PAVEMENT MARKINGS

SCALE IN FEET: 0 40 80

TEMPORARY 4" WHITE LINE
US ROUTE 2 20+75 ~ 25+60 - SOLID LANE LINE

TEMPORARY 4" YELLOW LINE
US ROUTE 2 20+75 ~ 25+60 - SOLID EDGE LINE

DATUM	
VERTICAL	NAVD 88
HORIZONTAL	NAD 83 (1996)

PROJECT NAME: SOUTH BURLINGTON
PROJECT NUMBER: IM 089-3(37)

FILE NAME: z03a178tmp.dgn
PROJECT LEADER: KEN UPMAL
DESIGNED BY: E.ATKINS
PLOT DATE: 5/22/2006
DRAWN BY: W.WONG
CHECKED BY: K.ISHIKURA
SHEET 73 OF 99

RAMP "C" SEQUENCING NOTES:

1) FOR PHASE IA, INSTALL TEMPORARY TRAFFIC BARRIERS AT THE EDGE OF PAVEMENT ALONG RAMP "C" SUCH THAT THE FACE OF THE BARRIERS WILL NOT ENCROACH UPON EXISTING PAVEMENT OF RAMP "C". PHASE IB SHALL NOT COMMENCE UNTIL ALL WORK IS COMPLETED UNDER PHASE IA.
2) FOR PHASE IB, INSTALL TEMPORARY TRAFFIC BARRIERS ALONG RAMP "C". MAINTAIN A 13' TRAVEL LANE WIDTH FROM EAST EDGE OF EXISTING RAMP "C".
3) FOR PHASE 1, EXCAVATE AND CONSTRUCT SAND BORROW, GRAVEL BORROW AND BASE COURSE IN TWO LIFTS FOR THE WIDENING PORTION OF RAMP "C".
4) FOR PHASE 2, RELOCATE TEMPORARY TRAFFIC BARRIERS ON THE NEWLY CONSTRUCTED BASE COURSE. MAINTAIN A 13' TRAVEL LANE WIDTH.
5) FOR PHASE 2, EXCAVATE AND CONSTRUCT SAND BORROW, GRAVEL BORROW AND BASE COURSE FOR THE REMAINING PORTION OF RAMP "C".
6) PAVE BINDER COURSE IN STAGES. MAINTAIN A MINIMUM OF ONE 13' TRAVEL LANE.
7) PAVE SURFACE COURSE IN STAGES. MAINTAIN A MINIMUM OF ONE 13' TRAVEL LANE.
8) RELOCATE PRECAST CONCRETE BARRIERS ON THE NEW PAVEMENT. MAINTAIN A 20' RAMP PAVEMENT WIDTH.
9) REMOVE PRECAST CONCRETE BARRIERS AFTER ALL THE TRAFFIC SIGNAL WORK IS COMPLETED ALONG ROUTE 2.
10) "YIELD" AND "YIELD AHEAD" SIGNS ARE ONLY REQUIRED IF THE ROUTE 2 WIDENING HAS BEEN COMPLETED SUCH THAT THE RAMP "C" TRAFFIC WILL BE ENTERING INTO THE ACTIVE LANE.

GENERAL TRAFFIC MAINTENANCE NOTES:

1) EXCAVATION FOR GRAVEL SUBBASE AND SAND BORROW SHALL NOT EXCEED 200' IN LENGTH ALONG RAMP OR HALF A DAY OF WORK. AT THE END OF A WORKING DAY, BACKFILLING AND COMPACTION OF GRAVEL SUBBASE AND SAND BORROW SHALL BE COMPLETED.
2) ELEVATION DIFFERENCES BETWEEN A PORTION OF RAMP OPENED FOR TRAFFIC AND A PORTION OF RAMP CONSTRUCTED SHALL NOT EXCEED 18" DURING NON-WORKING HOURS.
3) ALL EXISTING PAVEMENT MARKINGS IN CONFLICT WITH PROPOSED TEMPORARY PAVEMENT MARKINGS SHALL BE REMOVED.
4) CONTRACTOR SHALL RELOCATE OR COVER ALL EXISTING SIGNS WHERE THEY WOULD CONFLICT WITH CONSTRUCTION SIGNAGE.
5) SEE PEDESTRIAN DETOUR PLAN ON THIS SHEET FOR PEDESTRIAN DETOUR.
6) THE CONTRACTOR SHALL BE RESPONSIBLE FOR LOCATING CONSTRUCTION SIGNAGE SO AS NOT TO INTERFERE OR OBSTRUCT THE VIEW OF EXISTING TRAFFIC CONTROL DEVICES, STOPPING SIGHT DISTANCE AND CORNER SIGHT DISTANCE.
7) ALL TEMPORARY TRAFFIC BARRIERS SHALL BE DELINEATED IN ACCORDANCE WITH THE STANDARD SPECIFICATIONS AND THE "MANUAL ON UNIFORM TRAFFIC CONTROL DEVICES".
8) PHASING WORK SHOWN HERE IS SCHEMATIC ONLY. THE CONTRACTOR SHALL BE RESPONSIBLE FOR DEVELOPING APPROPRIATE CONSTRUCTION METHODS AND APPLICABLE TRAFFIC MAINTENANCE PLANS FOR ALL TRANSITION WORK BETWEEN PHASES.
9) THE PLACING AND RELOCATING OF TEMPORARY TRAFFIC BARRIERS AND ANY WORK REQUIRING LANE CLOSURES SHALL ONLY TAKE PLACE DURING THE HOURS OF 7:00PM - 6:00AM.
10) PORTABLE MESSAGE BOARDS SHALL BE USED AS ADVANCE WARNING SIGNS. THE PLACEMENT OF THESE BOARDS SHALL BE DETERMINED BY THE ENGINEER IN THE FIELD.

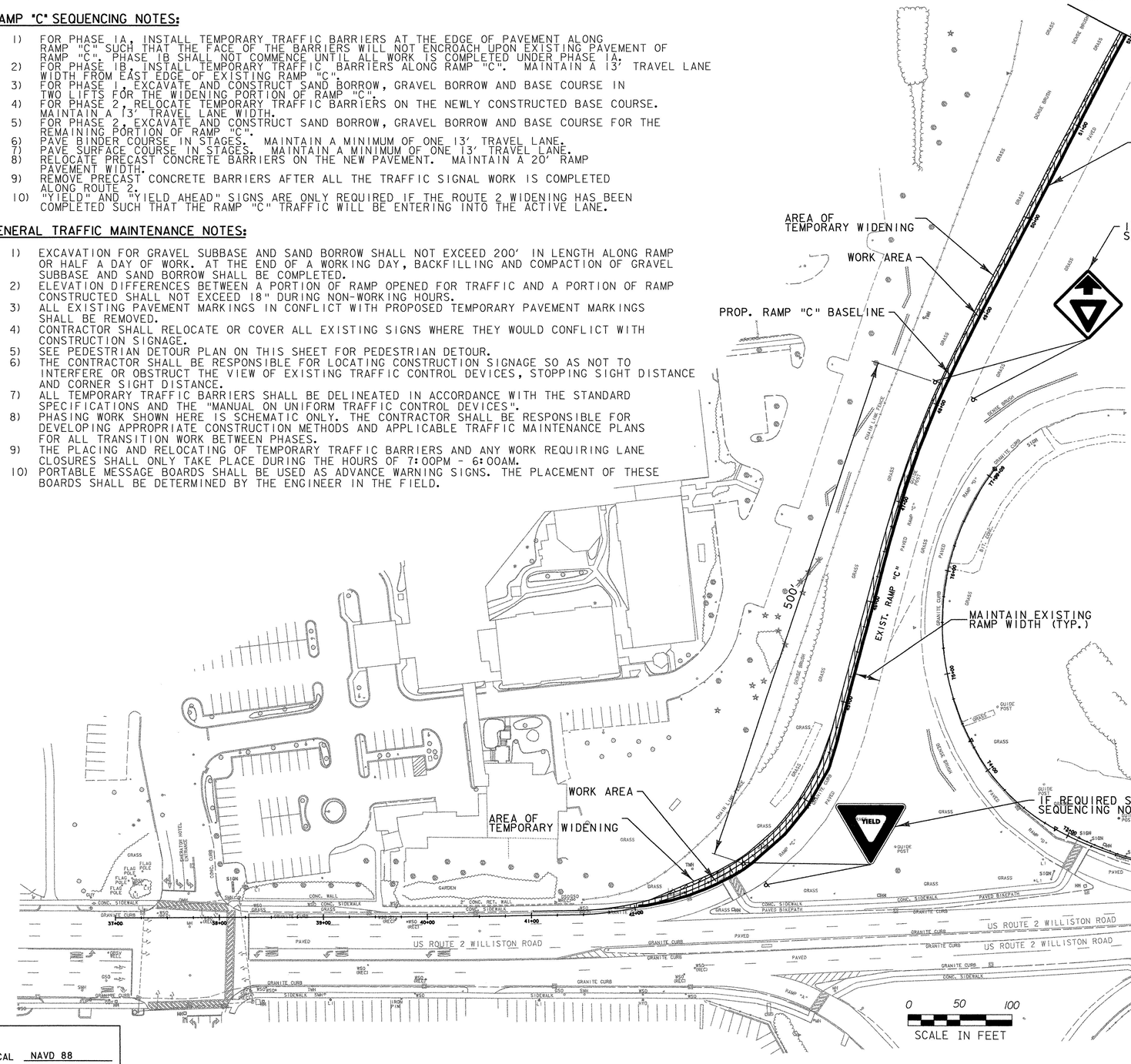

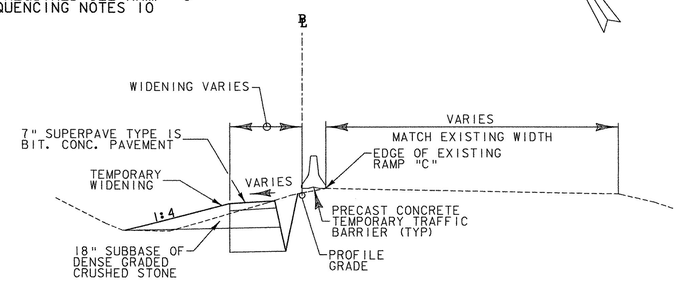

NOTE: ALL PROPOSED WORK UNDER PHASE IA, SUCH AS SLOPE WORK, DRAINAGE WORK, AND TEMPORARY WIDENING SHALL BE COMPLETED PRIOR TO COMMENCING PHASE IB.

PHASE IA - TEMPORARY WIDENING

RAMP "C"

LEGEND

- WORK AREA
- TEMPORARY WIDENING
- REFLECTORIZED DRUM
- TEMPORARY TRAFFIC BARRIER (PRECAST CONCRETE BARRIER)
- FLASHING ARROW BOARD
- IMPACT ATTENUATOR
- TEMPORARY PAVEMENT MARKINGS

0 50 100
SCALE IN FEET

TRAFFIC MANAGEMENT PLAN RAMP "C" PHASE IA

DATUM

VERTICAL NAVD 88
HORIZONTAL NAD 83 (1996)

PROJECT NAME: SOUTH BURLINGTON
PROJECT NUMBER: IM 089-3(37)

FILE NAME: z03al78tmp.dgn
PROJECT LEADER: KEN UPMAL
DESIGNED BY: E.ATKINS/P.MILEWSKI
SHEET 1OF 2

PLOT DATE: 5/22/2006
DRAWN BY: P.MILEWSKI
CHECKED BY: K.ISHIKURA
SHEET 74 OF 99

LEGEND

- WORK AREA
- TEMPORARY WIDENING
- REFLECTORIZED DRUM
- TEMPORARY TRAFFIC BARRIER (PRECAST CONCRETE BARRIER)
- FLASHING ARROW BOARD
- IMPACT ATTENUATOR
- TEMPORARY PAVEMENT MARKINGS

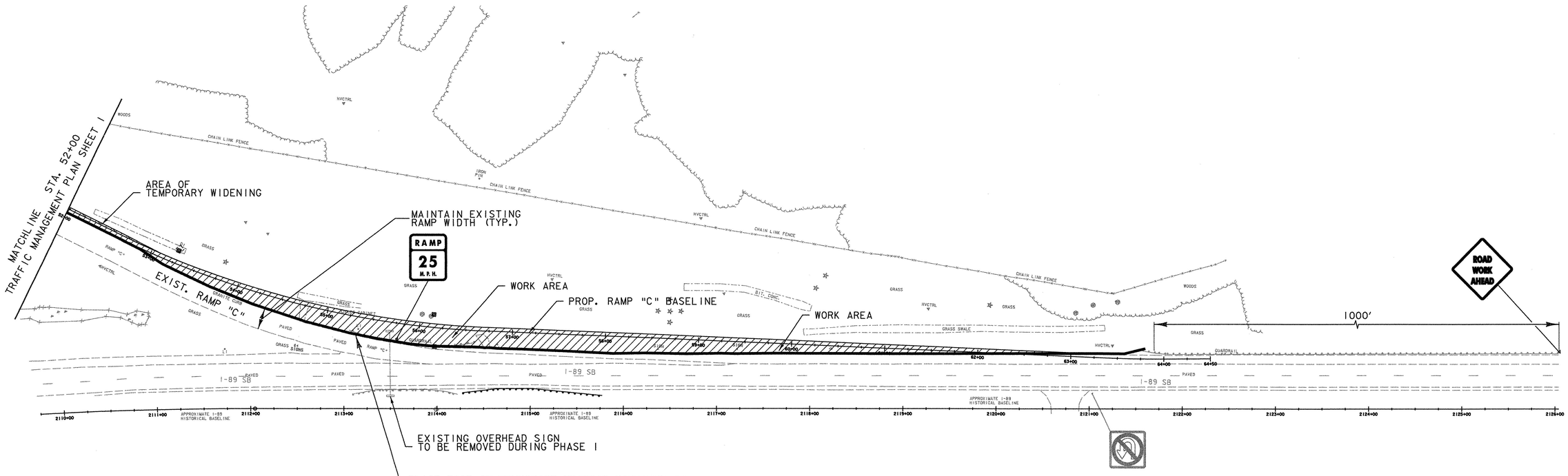

DATUM

VERTICAL NAVD 88
HORIZONTAL NAD 83 (1996)

TRAFFIC MANAGEMENT PLAN RAMP "C" PHASE IA

PROJECT NAME: SOUTH BURLINGTON
PROJECT NUMBER: IM 089-3(37)

FILE NAME: z03al78tmp.dgn
PROJECT LEADER: KEN UPMAL
DESIGNED BY: E.ATKINS/P.MILEWSKI
SHEET 2 OF 2

PLOT DATE: 5/5/2006
DRAWN BY: P.MILEWSKI
CHECKED BY: K.ISHIKURA
SHEET 75 OF 99

RAMP "C" SEQUENCING NOTES:

1) FOR PHASE IB, INSTALL TEMPORARY TRAFFIC BARRIERS ALONG RAMP "C". MAINTAIN A 13' TRAVEL LANE WIDTH FROM EAST EDGE OF EXISTING RAMP "C".
2) FOR PHASE 1, EXCAVATE AND CONSTRUCT SAND BORROW, GRAVEL BORROW AND BASE COURSE IN TWO LIFTS FOR THE WIDENING PORTION OF RAMP "C".
3) FOR PHASE 2, RELOCATE TEMPORARY TRAFFIC BARRIERS ON THE NEWLY CONSTRUCTED BASE COURSE. MAINTAIN A 13' TRAVEL LANE WIDTH.
4) FOR PHASE 2, EXCAVATE AND CONSTRUCT SAND BORROW, GRAVEL BORROW AND BASE COURSE FOR THE REMAINING PORTION OF RAMP "C".
5) PAVE BINDER COURSE IN STAGES. MAINTAIN A MINIMUM OF ONE 13' TRAVEL LANE.
6) PAVE SURFACE COURSE IN STAGES. MAINTAIN A MINIMUM OF ONE 13' TRAVEL LANE.
7) RELOCATE PRECAST CONCRETE BARRIERS ON THE NEW PAVEMENT. MAINTAIN A 20' RAMP PAVEMENT WIDTH.
8) REMOVE PRECAST CONCRETE BARRIERS AFTER ALL THE TRAFFIC SIGNAL WORK IS COMPLETED ALONG ROUTE 2.
9) "YIELD" AND "YIELD AHEAD" SIGNS ARE ONLY REQUIRED IF THE ROUTE 2 WIDENING HAS BEEN COMPLETED SUCH THAT THE RAMP "C" TRAFFIC WILL BE ENTERING INTO THE ACTIVE LANE.

GENERAL TRAFFIC MAINTENANCE NOTES:

1) EXCAVATION FOR GRAVEL SUBBASE AND SAND BORROW SHALL NOT EXCEED 200' IN LENGTH ALONG RAMP OR HALF A DAY OF WORK. AT THE END OF A WORKING DAY, BACKFILLING AND COMPACTION OF GRAVEL SUBBASE AND SAND BORROW SHALL BE COMPLETED.
2) ELEVATION DIFFERENCES BETWEEN A PORTION OF RAMP OPENED FOR TRAFFIC AND A PORTION OF RAMP CONSTRUCTED SHALL NOT EXCEED 18" DURING NON-WORKING HOURS.
3) ALL EXISTING PAVEMENT MARKINGS IN CONFLICT WITH PROPOSED TEMPORARY PAVEMENT MARKINGS SHALL BE REMOVED.
4) CONTRACTOR SHALL RELOCATE OR COVER ALL EXISTING SIGNS WHERE THEY WOULD CONFLICT WITH CONSTRUCTION SIGNAGE.
5) SEE PEDESTRIAN DETOUR PLAN ON THIS SHEET FOR PEDESTRIAN DETOUR.
6) THE CONTRACTOR SHALL BE RESPONSIBLE FOR LOCATING CONSTRUCTION SIGNAGE SO AS NOT TO INTERFERE OR OBSTRUCT THE VIEW OF EXISTING TRAFFIC CONTROL DEVICES, STOPPING SIGHT DISTANCE AND CORNER SIGHT DISTANCE.
7) ALL TEMPORARY TRAFFIC BARRIERS SHALL BE DELINEATED IN ACCORDANCE WITH THE STANDARD SPECIFICATIONS AND THE "MANUAL ON UNIFORM TRAFFIC CONTROL DEVICES".
8) PHASING WORK SHOWN HERE IS SCHEMATIC ONLY. THE CONTRACTOR SHALL BE RESPONSIBLE FOR DEVELOPING APPROPRIATE CONSTRUCTION METHODS AND APPLICABLE TRAFFIC MAINTENANCE PLANS FOR ALL TRANSITION WORK BETWEEN PHASES.
9) THE PLACING AND RELOCATING OF TEMPORARY TRAFFIC BARRIERS AND ANY WORK REQUIRING LANE CLOSURES SHALL ONLY TAKE PLACE DURING THE HOURS OF 7:00PM - 6:00AM.
10) PORTABLE MESSAGE BOARDS SHALL BE USED AS ADVANCE WARNING SIGNS. THE PLACEMENT OF THESE BOARDS SHALL BE DETERMINED BY THE ENGINEER IN THE FIELD.

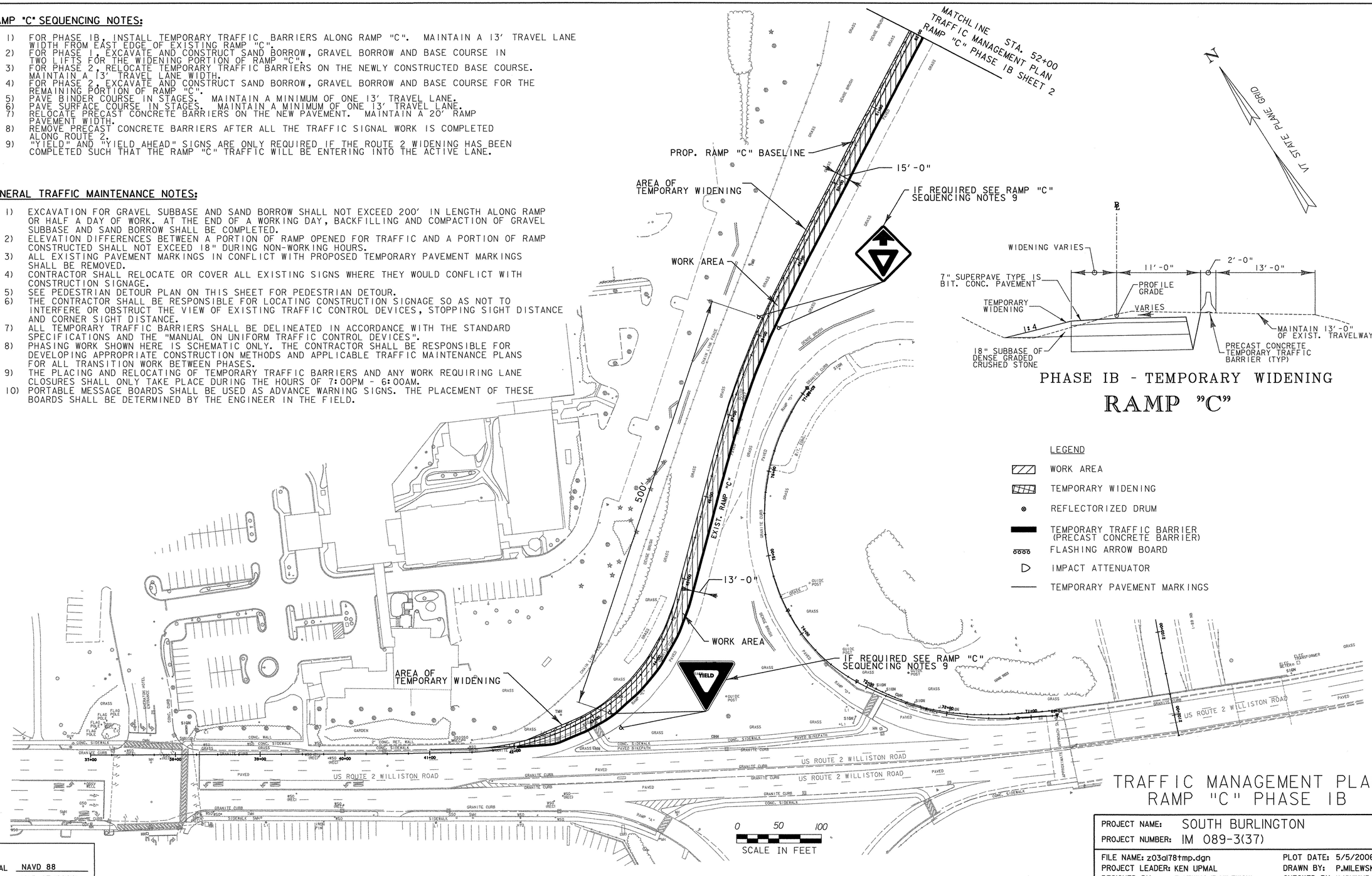

PHASE IB - TEMPORARY WIDENING

RAMP "C"

LEGEND

- WORK AREA
- TEMPORARY WIDENING
- REFLECTORIZED DRUM
- TEMPORARY TRAFFIC BARRIER (PRECAST CONCRETE BARRIER)
- FLASHING ARROW BOARD
- IMPACT ATTENUATOR
- TEMPORARY PAVEMENT MARKINGS

TRAFFIC MANAGEMENT PLAN RAMP "C" PHASE IB

DATUM

VERTICAL NAVD 88
HORIZONTAL NAD 83 (1996)

PROJECT NAME: SOUTH BURLINGTON
PROJECT NUMBER: IM 089-3(37)

FILE NAME: z03al78tmp.dgn
PROJECT LEADER: KEN UPMAL
DESIGNED BY: E.ATKINS/P.MILEWSKI
SHEET 1OF 2

PLOT DATE: 5/5/2006
DRAWN BY: P.MILEWSKI
CHECKED BY: K.ISHIKURA
SHEET 76 OF 99

LEGEND

- WORK AREA
- TEMPORARY WIDENING
- REFLECTORIZED DRUM
- TEMPORARY TRAFFIC BARRIER (PRECAST CONCRETE BARRIER)
- FLASHING ARROW BOARD
- IMPACT ATTENUATOR
- TEMPORARY PAVEMENT MARKINGS

TEMPORARY 4" WHITE LINE

I-89 2111+50 ~ 2123+50 LT - SOLID LANE LINE

TEMPORARY 4" YELLOW LINE

I-89 2111+50 ~ 2123+50 LT - SOLID EDGE LINE

N

VT STATE PLANE GRID

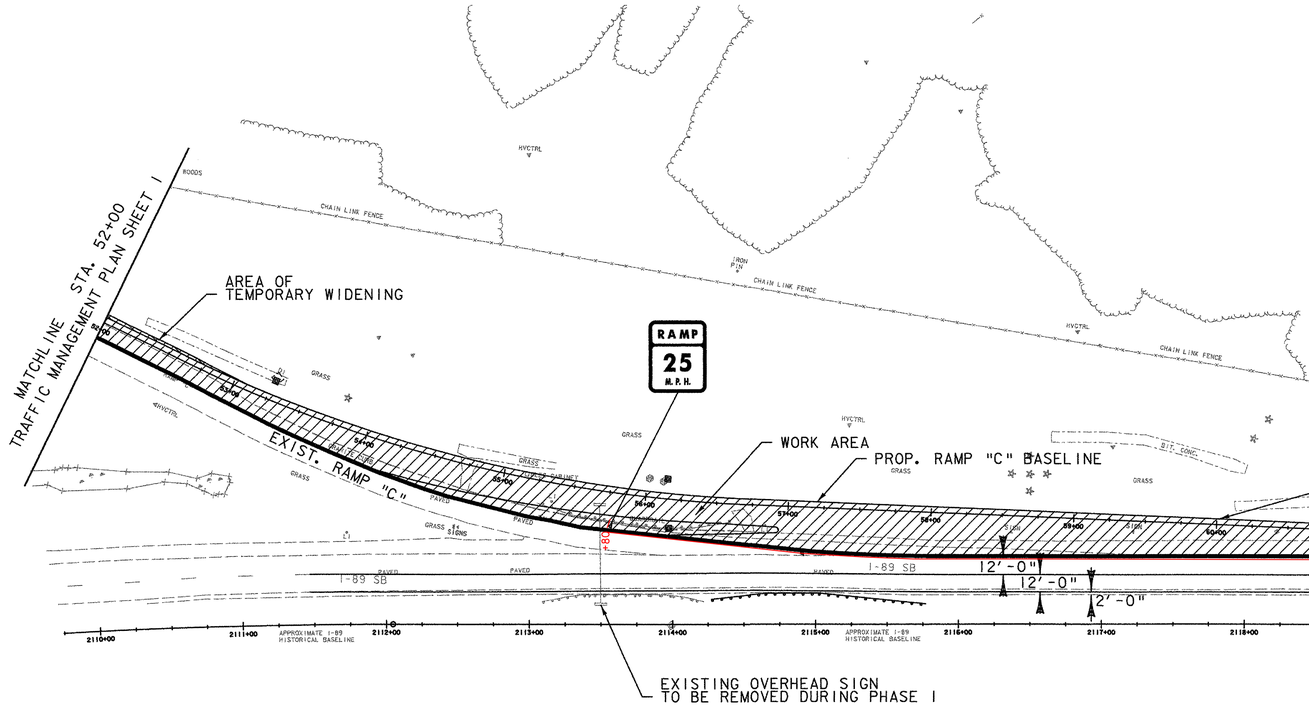

0 50 100

SCALE IN FEET

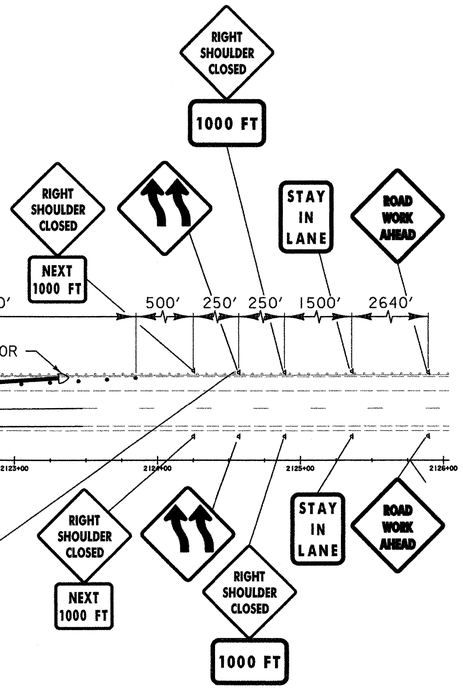

CONTRACTOR SHALL TEMPORARILY RELOCATE THE EXISTING "THRU TRAFFIC KEEP LEFT" SIGN AT APPROX. STA. 2134+00 TO 500 FEET (MIN.) NORTH OF PROPOSED "STAY IN LANE" SIGN. THE CONTRACTOR SHALL MOVE THE SIGN BACK TO ITS ORIGINAL LOCATION UPON COMPLETION OF THE PROJECT.

TRAFFIC MANAGEMENT PLAN RAMP "C" PHASE IB

DATUM

VERTICAL NAVD 88
HORIZONTAL NAD 83 (1996)

PROJECT NAME: SOUTH BURLINGTON
PROJECT NUMBER: IM 089-3(37)

FILE NAME: z03a178tmp.dgn
PROJECT LEADER: KEN UPMAL
DESIGNED BY: E.ATKINS/P.MILEWSKI
SHEET 2 OF 2

PLOT DATE: 5/5/2006
DRAWN BY: P.MILEWSKI
CHECKED BY: K.ISHIKURA
SHEET 77 OF 99

RAMP "C" SEQUENCING NOTES:

1) FOR PHASE 2, RELOCATE TEMPORARY TRAFFIC BARRIERS ON THE NEWLY CONSTRUCTED BASE COURSE. MAINTAIN A 13' TRAVEL LANE WIDTH.
2) FOR PHASE 2, EXCAVATE AND CONSTRUCT SAND BORROW, GRAVEL BORROW AND BASE COURSE FOR THE REMAINING PORTION OF RAMP "C".
3) PAVE BINDER COURSE IN STAGES. MAINTAIN A MINIMUM OF ONE 13' TRAVEL LANE.
4) PAVE SURFACE COURSE IN STAGES. MAINTAIN A MINIMUM OF ONE 13' TRAVEL LANE.
5) RELOCATE PRECAST CONCRETE BARRIERS ON THE NEW PAVEMENT. MAINTAIN A 20' RAMP PAVEMENT WIDTH.
6) REMOVE PRECAST CONCRETE BARRIERS AFTER ALL THE TRAFFIC SIGNAL WORK IS COMPLETED ALONG ROUTE 2.
7) "YIELD" AND "YIELD AHEAD" SIGNS ARE ONLY REQUIRED IF THE ROUTE 2 WIDENING HAS BEEN COMPLETED SUCH THAT THE RAMP "C" TRAFFIC WILL BE ENTERING INTO THE ACTIVE LANE.

GENERAL TRAFFIC MAINTENANCE NOTES:

1) EXCAVATION FOR GRAVEL SUBBASE AND SAND BORROW SHALL NOT EXCEED 200' IN LENGTH ALONG RAMP OR HALF A DAY OF WORK. AT THE END OF A WORKING DAY, BACKFILLING AND COMPACTION OF GRAVEL SUBBASE AND SAND BORROW SHALL BE COMPLETED.
2) ELEVATION DIFFERENCES BETWEEN A PORTION OF RAMP OPENED FOR TRAFFIC AND A PORTION OF RAMP CONSTRUCTED SHALL NOT EXCEED 18" DURING NON-WORKING HOURS.
3) ALL EXISTING PAVEMENT MARKINGS IN CONFLICT WITH PROPOSED TEMPORARY PAVEMENT MARKINGS SHALL BE REMOVED.
4) CONTRACTOR SHALL RELOCATE OR COVER ALL EXISTING SIGNS WHERE THEY WOULD CONFLICT WITH CONSTRUCTION SIGNAGE.
5) SEE PEDESTRIAN DETOUR PLAN ON THIS SHEET FOR PEDESTRIAN DETOUR.
6) THE CONTRACTOR SHALL BE RESPONSIBLE FOR LOCATING CONSTRUCTION SIGNAGE SO AS NOT TO INTERFERE OR OBSTRUCT THE VIEW OF EXISTING TRAFFIC CONTROL DEVICES, STOPPING SIGHT DISTANCE AND CORNER SIGHT DISTANCE.
7) ALL TEMPORARY TRAFFIC BARRIERS SHALL BE DELINEATED IN ACCORDANCE WITH THE STANDARD SPECIFICATIONS AND THE "MANUAL ON UNIFORM TRAFFIC CONTROL DEVICES".
8) PHASING WORK SHOWN HERE IS SCHEMATIC ONLY. THE CONTRACTOR SHALL BE RESPONSIBLE FOR DEVELOPING APPROPRIATE CONSTRUCTION METHODS AND APPLICABLE TRAFFIC MAINTENANCE PLANS FOR ALL TRANSITION WORK BETWEEN PHASES.
9) THE PLACING AND RELOCATING OF TEMPORARY TRAFFIC BARRIERS AND ANY WORK REQUIRING LANE CLOSURES SHALL ONLY TAKE PLACE DURING THE HOURS OF 7:00PM - 6:00AM.
10) PORTABLE MESSAGE BOARDS SHALL BE USED AS ADVANCE WARNING SIGNS. THE PLACEMENT OF THESE BOARDS SHALL BE DETERMINED BY THE ENGINEER IN THE FIELD.

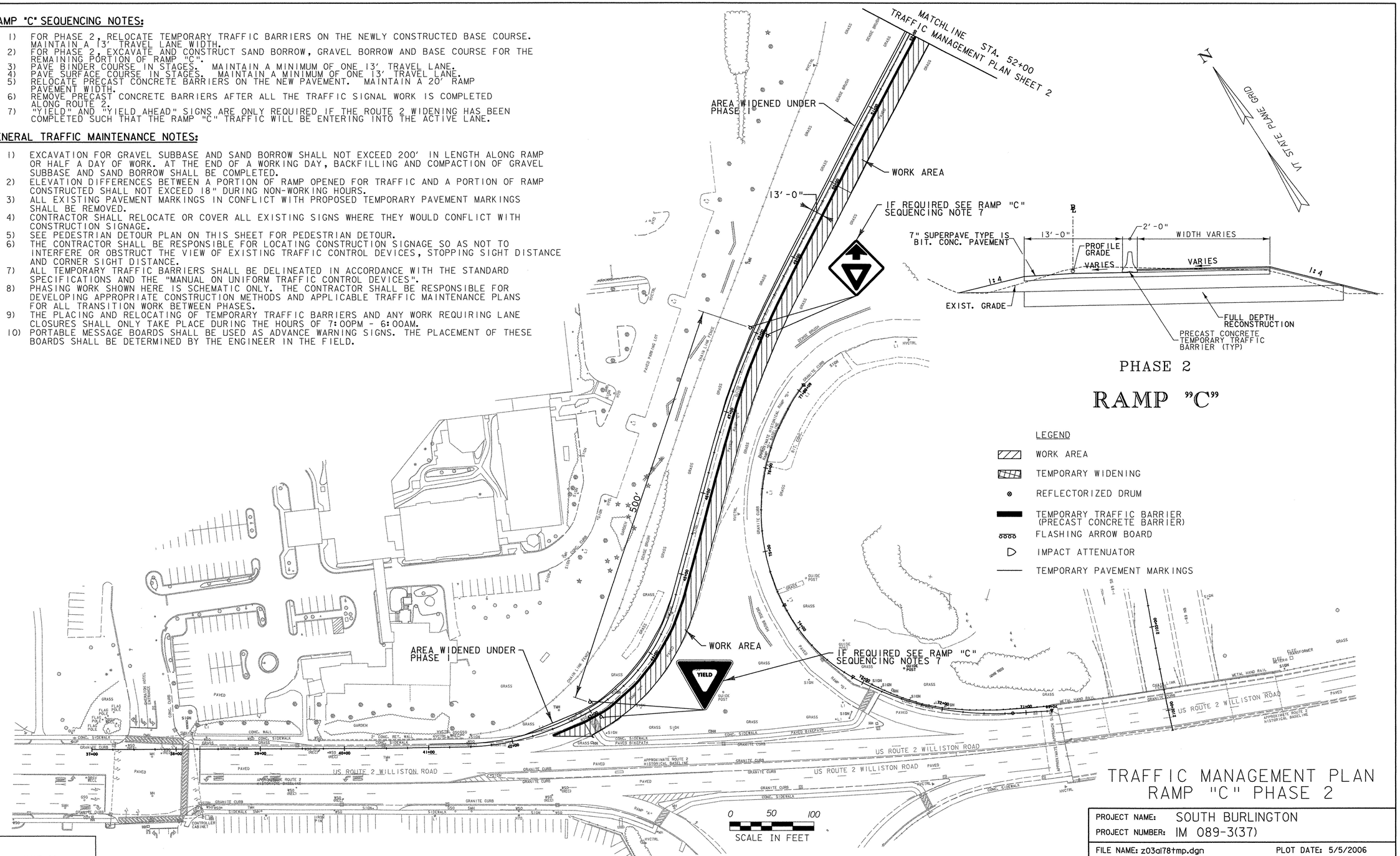

PHASE 2

RAMP "C"

LEGEND

- WORK AREA
- TEMPORARY WIDENING
- REFLECTORIZED DRUM
- TEMPORARY TRAFFIC BARRIER (PRECAST CONCRETE BARRIER)
- FLASHING ARROW BOARD
- IMPACT ATTENUATOR
- TEMPORARY PAVEMENT MARKINGS

N

VT STATE PLANE GRID

TRAFFIC MANAGEMENT PLAN
RAMP "C" PHASE 2

DATUM

VERTICAL NAVD 88
HORIZONTAL NAD 83 (1996)

PROJECT NAME: SOUTH BURLINGTON	
PROJECT NUMBER: IM 089-3(37)	
FILE NAME: z03al78tmp.dgn	PLOT DATE: 5/5/2006
PROJECT LEADER: KEN UPMAL	DRAWN BY: P.MILEWSKI
DESIGNED BY: E.ATKINS/P.MILEWSKI	CHECKED BY: K.ISHIKURA
SHEET 1OF 2	SHEET 78 OF 99

LEGEND

- WORK AREA
- TEMPORARY WIDENING
- REFLECTORIZED DRUM
- TEMPORARY TRAFFIC BARRIER (PRECAST CONCRETE BARRIER)
- FLASHING ARROW BOARD
- IMPACT ATTENUATOR
- TEMPORARY PAVEMENT MARKINGS

TEMPORARY 4" WHITE LINE

I-89 2111+50 ~ 2123+50 LT - SOLID LANE LINE
I-89 2111+50 ~ 2123+50 LT - SOLID EDGE LINE
RAMP "C" 57+00 ~ 61+50 RT - SOLID EDGE LINE

TEMPORARY 4" YELLOW LINE

I-89 2111+50 ~ 2123+50 LT - SOLID EDGE LINE

N

VT STATE PLANE GRID

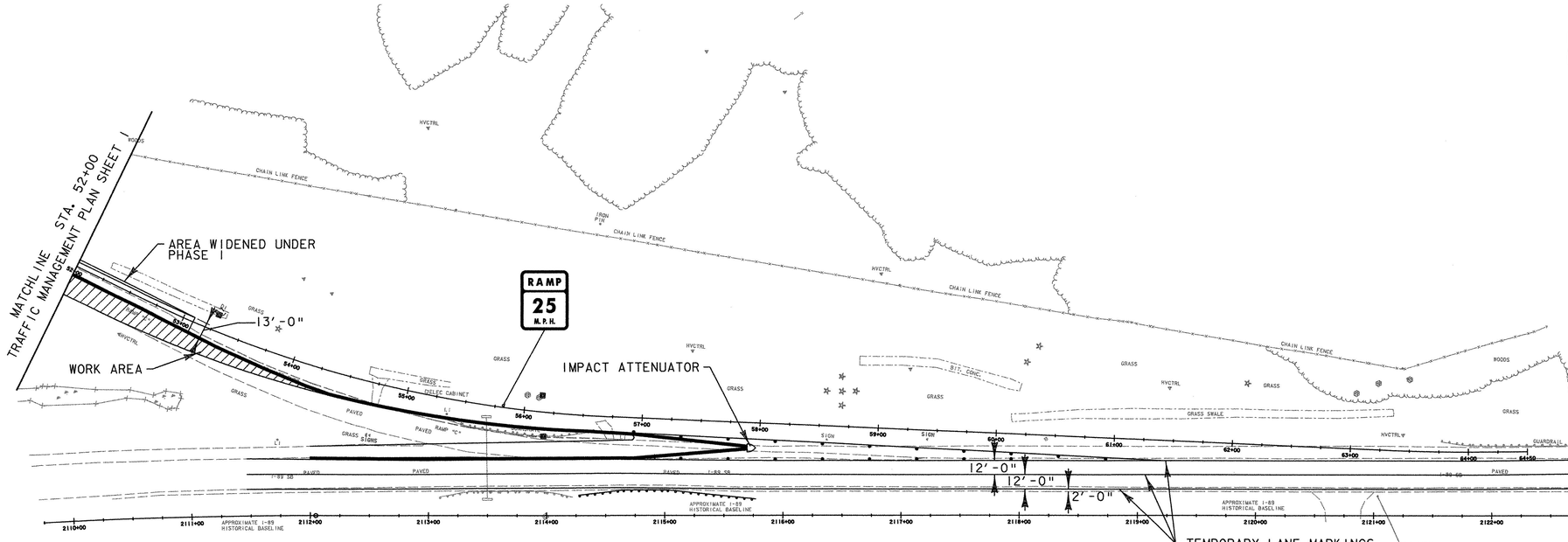

0 50 100
SCALE IN FEET

CONTRACTOR SHALL TEMPORARILY RELOCATE THE EXISTING "THRU TRAFFIC KEEP LEFT" SIGN AT APPROX. STA. 2134+00 TO 500 FEET (MIN.) NORTH OF PROPOSED "STAY IN LANE" SIGN. THE CONTRACTOR SHALL MOVE THE SIGN BACK TO ITS ORIGINAL LOCATION UPON COMPLETION OF THE PROJECT.

RETAIN SIGNS FROM PHASE IB AND KEEP IN ORIGINAL LOCATIONS (TYP.)

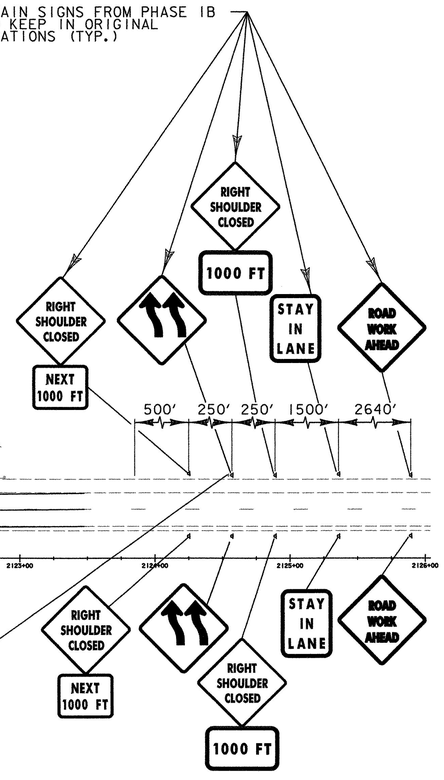

TRAFFIC MANAGEMENT PLAN RAMP "C" PHASE 2

PROJECT NAME:	SOUTH BURLINGTON
PROJECT NUMBER:	IM 089-3(37)
FILE NAME: z03al78tmp.dgn	PLOT DATE: 5/5/2006
PROJECT LEADER: KEN UPMAL	DRAWN BY: P.MILEWSKI
DESIGNED BY: E.ATKINS/P.MILEWSKI	CHECKED BY: K.ISHIKURA
SHEET 2 OF 2	SHEET 79 OF 99

DATUM

VERTICAL NAVD 88
HORIZONTAL NAD 83 (1996)

GENERAL TRAFFIC MAINTENANCE NOTES:

1) EXCAVATION FOR GRAVEL SUBBASE AND SAND BORROW SHALL NOT EXCEED 200' IN LENGTH ALONG ROADWAY OR HALF A DAY OF WORK. AT THE END OF A WORKING DAY, BACKFILLING AND COMPACTION OF GRAVEL SUBBASE AND SAND BORROW SHALL BE COMPLETED.
2) ELEVATION DIFFERENCES BETWEEN A PORTION OF ROADWAY OPENED FOR TRAFFIC AND A PORTION OF ROADWAY CONSTRUCTED SHALL NOT EXCEED 18" DURING NON-WORKING HOURS.
3) ALL EXISTING PAVEMENT MARKINGS IN CONFLICT WITH PROPOSED TEMPORARY PAVEMENT MARKINGS SHALL BE REMOVED.
4) CONTRACTOR SHALL RELOCATE OR COVER ALL EXISTING SIGNS WHERE THEY WOULD CONFLICT WITH CONSTRUCTION SIGNAGE.
5) SEE PEDESTRIAN DETOUR PLAN ON THIS SHEET FOR PEDESTRIAN DETOUR.
6) THE CONTRACTOR SHALL BE RESPONSIBLE FOR LOCATING CONSTRUCTION SIGNAGE SO AS NOT TO INTERFERE OR OBSTRUCT THE VIEW OF EXISTING TRAFFIC CONTROL DEVICES, STOPPING SIGHT DISTANCE AND CORNER SIGHT DISTANCE.
7) ALL TEMPORARY TRAFFIC BARRIERS SHALL BE DELINEATED IN ACCORDANCE WITH THE STANDARD SPECIFICATIONS AND THE "MANUAL ON UNIFORM TRAFFIC CONTROL DEVICES".
8) PHASING WORK SHOWN HERE IS SCHEMATIC ONLY. THE CONTRACTOR SHALL BE RESPONSIBLE FOR DEVELOPING APPROPRIATE CONSTRUCTION METHODS AND APPLICABLE TRAFFIC MAINTENANCE PLANS FOR ALL TRANSITION WORK BETWEEN PHASES.
9) THE PLACING AND RELOCATING OF TEMPORARY TRAFFIC BARRIERS AND ANY WORK REQUIRING LANE CLOSURES SHALL ONLY TAKE PLACE DURING THE HOURS OF 7:00PM - 6:00AM.
10) PORTABLE MESSAGE BOARDS SHALL BE USED AS ADVANCE WARNING SIGNS. THE PLACEMENT OF THESE BOARDS SHALL BE DETERMINED BY THE ENGINEER IN THE FIELD.

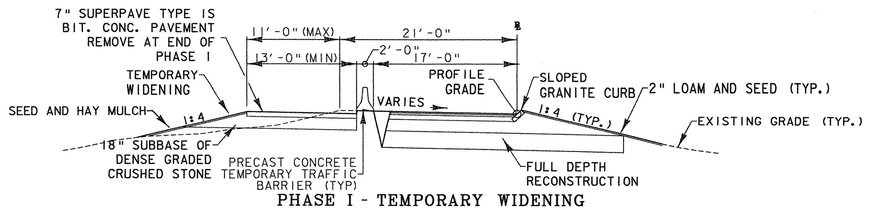

PHASE I - TEMPORARY WIDENING

RAMP "D"

LEGEND

- WORK AREA
- TEMPORARY WIDENING
- REFLECTORIZED DRUM
- TEMPORARY TRAFFIC BARRIER (PRECAST CONCRETE BARRIER)
- FLASHING ARROW BOARD
- IMPACT ATTENUATOR
- TEMPORARY PAVEMENT MARKINGS

N — VT STATE PLANE GRID

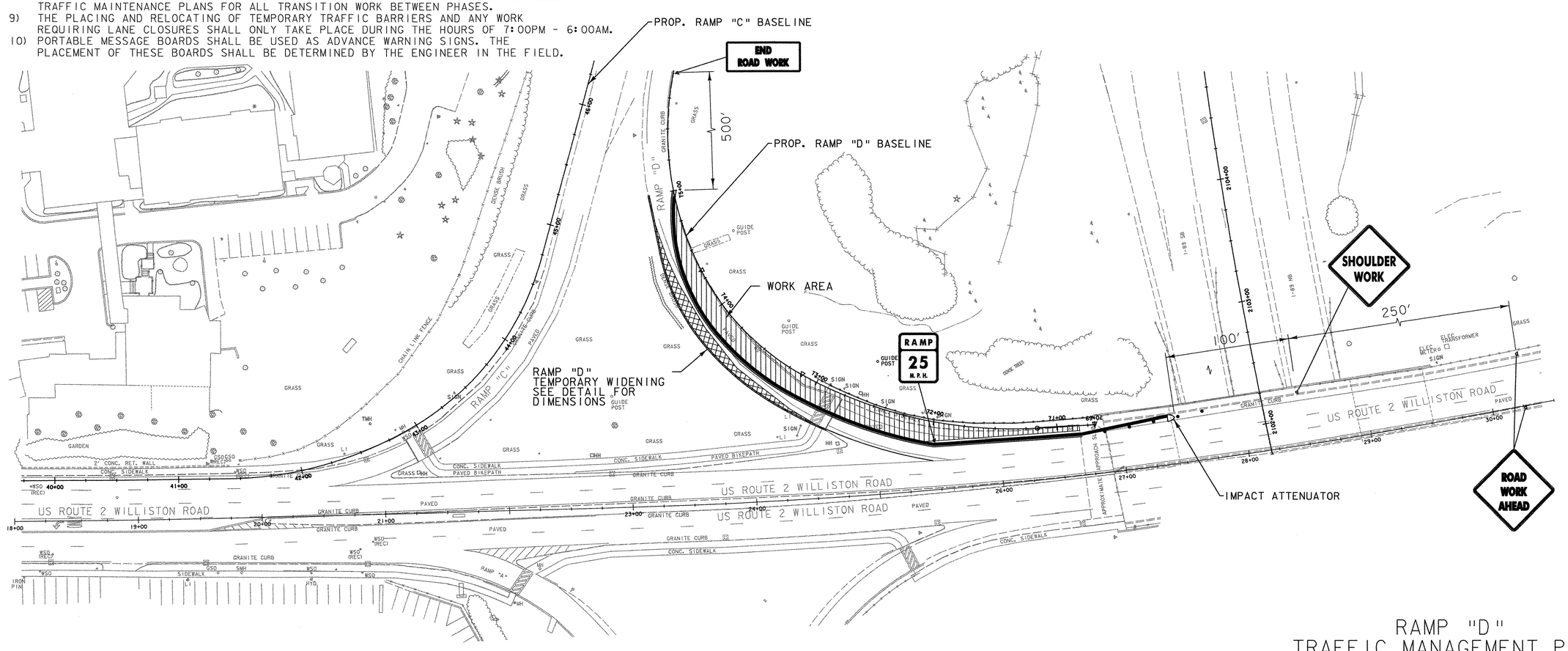

SCALE IN FEET: 0 — 40 — 80

TEMPORARY 4" WHITE LINE
RAMP "D" 72+00 ~ 75+00 LT - SOLID EDGE LINE

TEMPORARY 4" YELLOW LINE
I-89 211+50 ~ 213+50 LT - SOLID EDGE LINE

DATUM

VERTICAL NAVD 88
HORIZONTAL NAD 83 (1996)

RAMP "D" TRAFFIC MANAGEMENT PLAN PHASE I

PROJECT NAME: SOUTH BURLINGTON
PROJECT NUMBER: IM 089-3(37)

FILE NAME: z03a178tmp.dgn
PROJECT LEADER: KEN UPMAL
DESIGNED BY: E.ATKINS/W.WONG
SHEET 1 OF 2

PLOT DATE: 5/5/2006
DRAWN BY: W.WONG
CHECKED BY: K.ISHIKURA
SHEET 80 OF 99

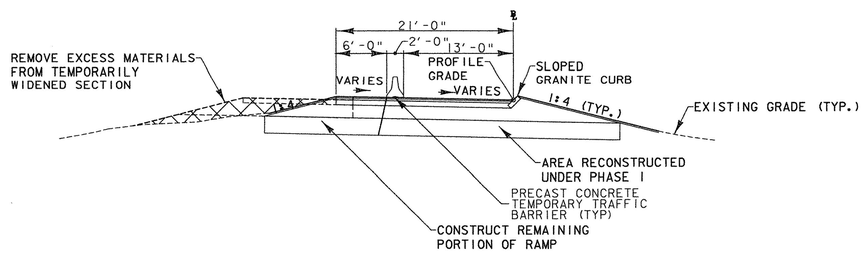

PHASE 2

RAMP "D"

TEMPORARY 4" WHITE LINE
RAMP "D" 70+50 ~ 75+00 LT - SOLID EDGE LINE

TEMPORARY 4" YELLOW LINE
RAMP "D" 72+00 ~ 75+00 LT - SOLID EDGE LINE

TEMPORARY 8" WHITE LINE
US ROUTE 2 27+00 ~ 24+75 LT - SOLID EDGE LINE
US ROUTE 2 27+00 LT ~ RAMP "D" 72+00 LT - SOLID EDGE LINE

LEGEND

- WORK AREA
- TEMPORARY WIDENING
- REFLECTORIZED DRUM
- TEMPORARY TRAFFIC BARRIER (PRECAST CONCRETE BARRIER)
- FLASHING ARROW BOARD
- IMPACT ATTENUATOR
- TEMPORARY PAVEMENT MARKINGS

N
VT STATE PLANE GRID

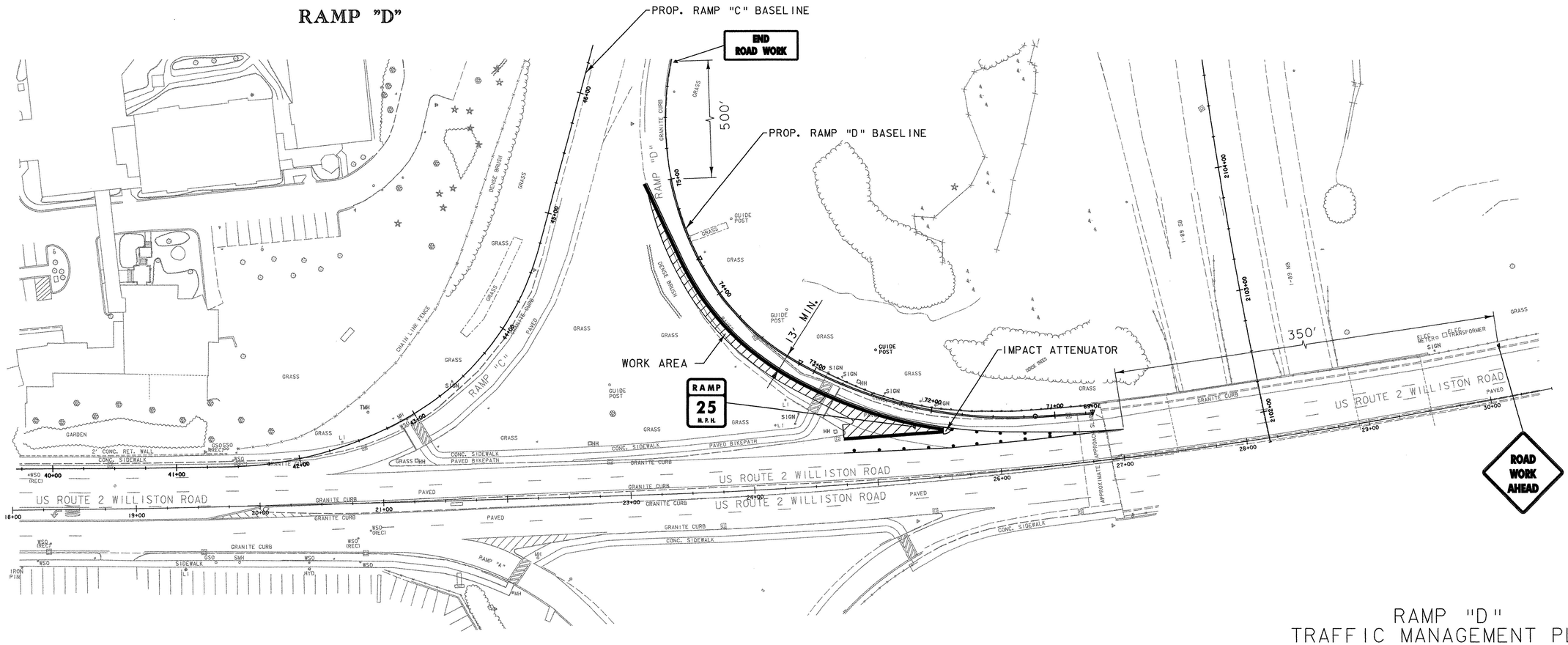

0 40 80
SCALE IN FEET

RAMP "D" TRAFFIC MANAGEMENT PLAN PHASE 2

DATUM

VERTICAL NAVD 88
HORIZONTAL NAD 83 (1996)

PROJECT NAME: SOUTH BURLINGTON
PROJECT NUMBER: IM 089-3(37)

FILE NAME: z03a178tmp.dgn
PROJECT LEADER: KEN UPMAL
DESIGNED BY: E.ATKINS/W.WONG
SHEET 2 OF 2

PLOT DATE: 5/5/2006
DRAWN BY: W.WONG
CHECKED BY: K.ISHIKURA
SHEET 81 OF 99

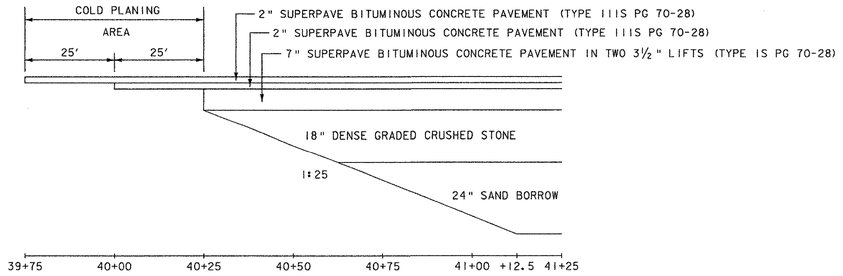

MATERIAL TRANSITION DETAIL

NOT TO SCALE

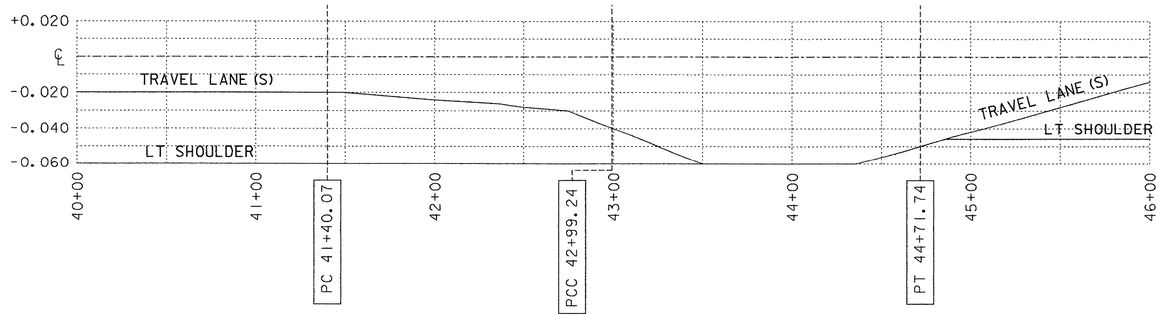

BANKING TRANSITION DETAIL

SCALE:
HORIZ.: 1" = 40'

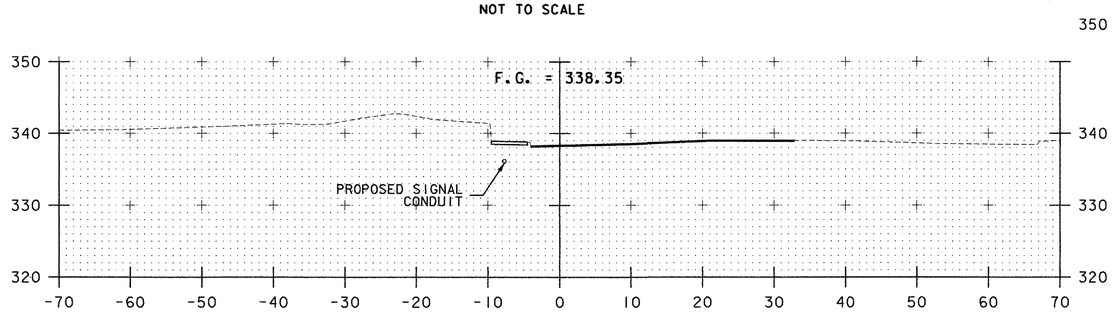

40+00

BEGIN APPROACH
MATCH EXISTING BCP
STA. 39+75.00
ELEV. = 338.41

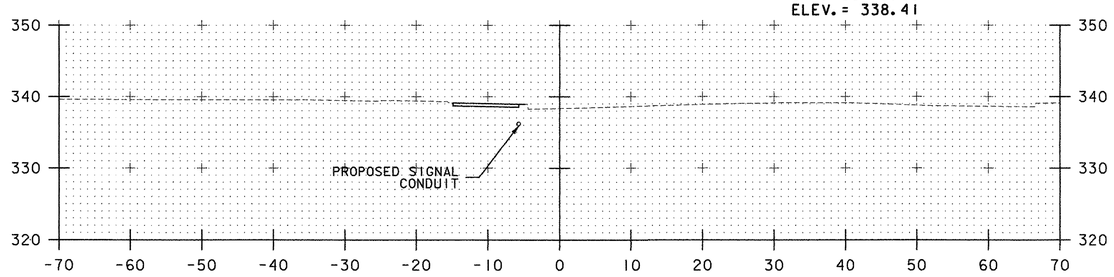

39+50

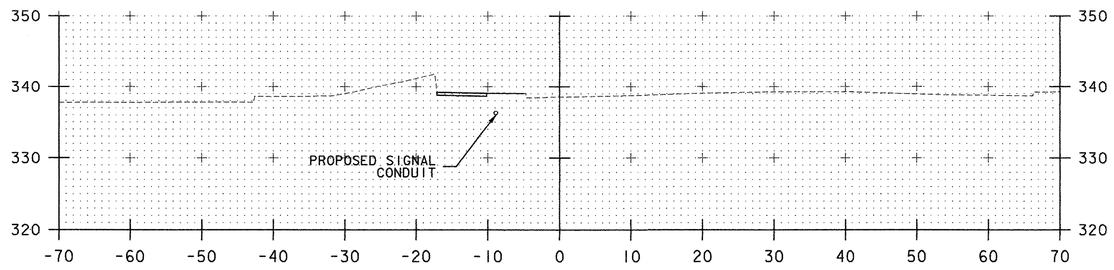

39+00

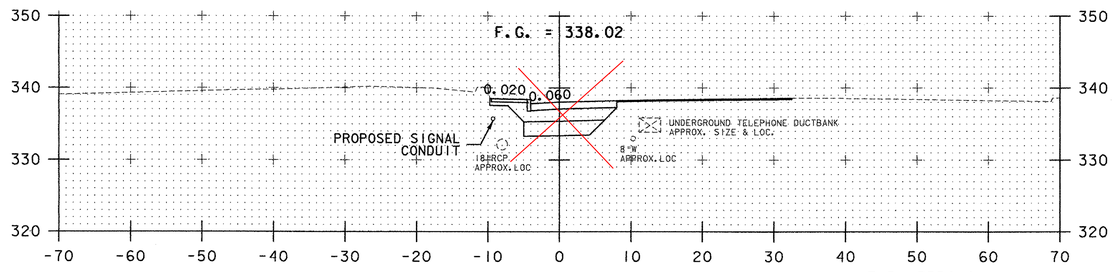

41+40.07 PC

END APPROACH
BEGIN PROJECT
STA. 41+12.50
ELEV. = 338.10

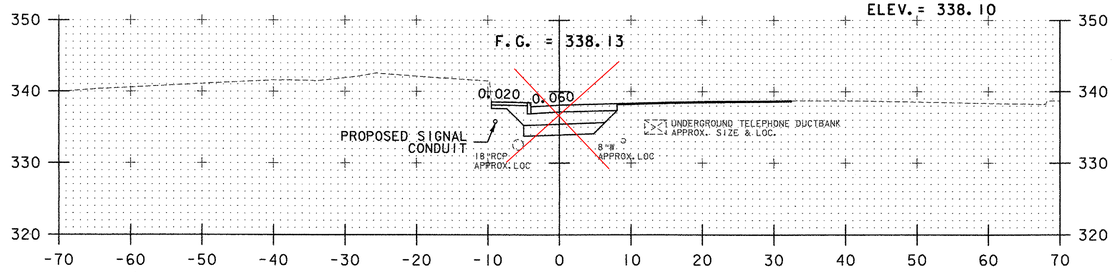

41+00

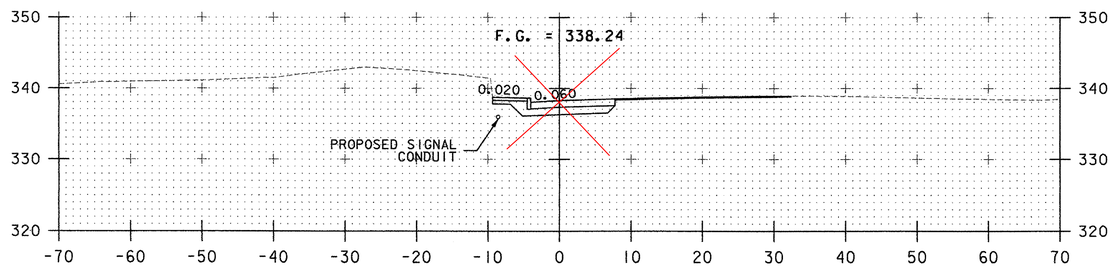

40+50

0 10 20
SCALE IN FEET

DATUM

VERTICAL NAVD 88
HORIZONTAL NAD 83 (1996)

STA. 39+00 TO STA. 41+40.07

RAMP "C" SECTIONS SHEET 1

PROJECT NAME: SOUTH BURLINGTON
PROJECT NUMBER: IM 089-3(37)

FILE NAME: z03al78xs.dgn
PROJECT LEADER: KEN UPMAL
DESIGNED BY: E. ATKINS
PLOT DATE: 5/5/2006
DRAWN BY: E. ATKINS
CHECKED BY: K. ISHIKURA
SHEET 82 OF 99

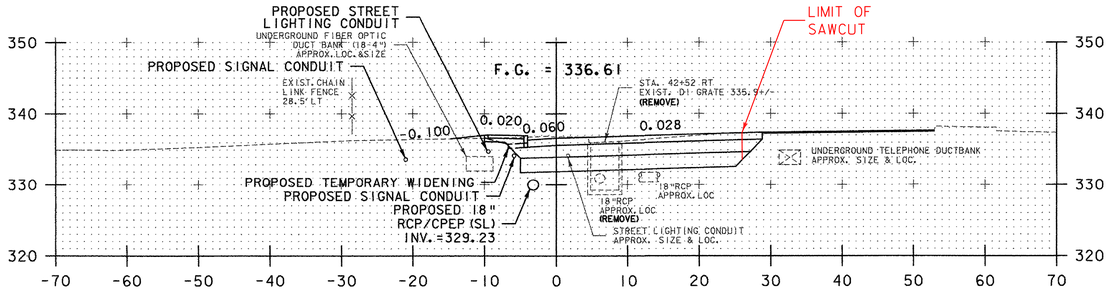

42+50

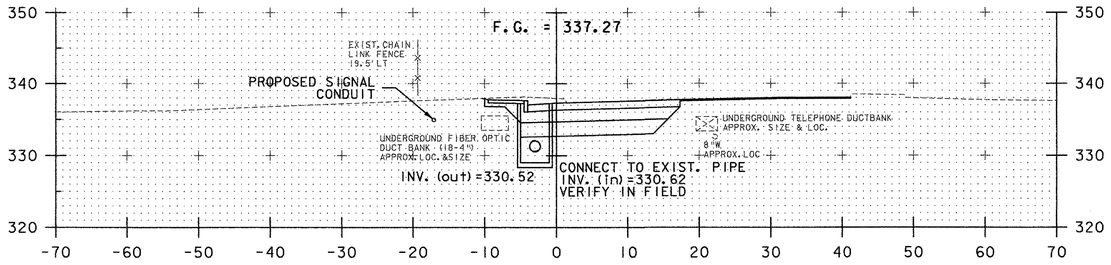

42+14
DI

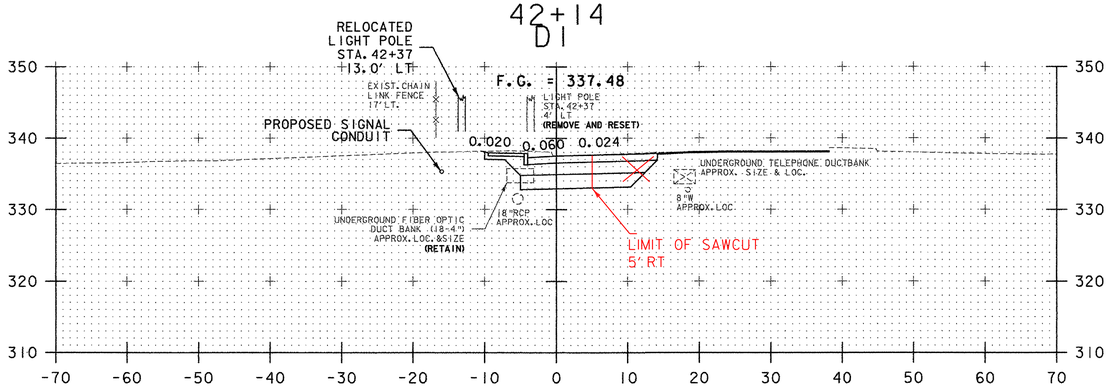

42+00

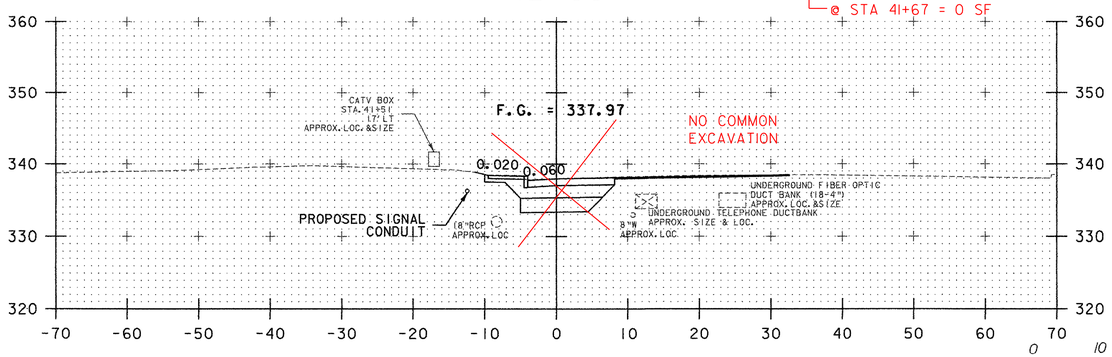

41+50

COMMON EXCAVATION @ STA 41+67 = 0 SF

0 10 20
SCALE IN FEET

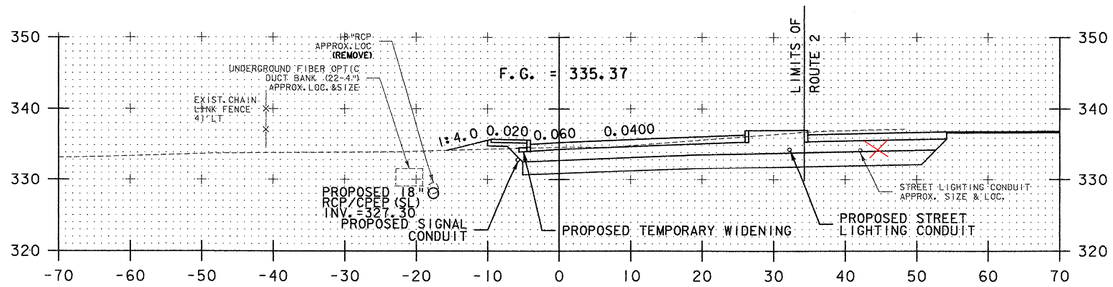

43+00

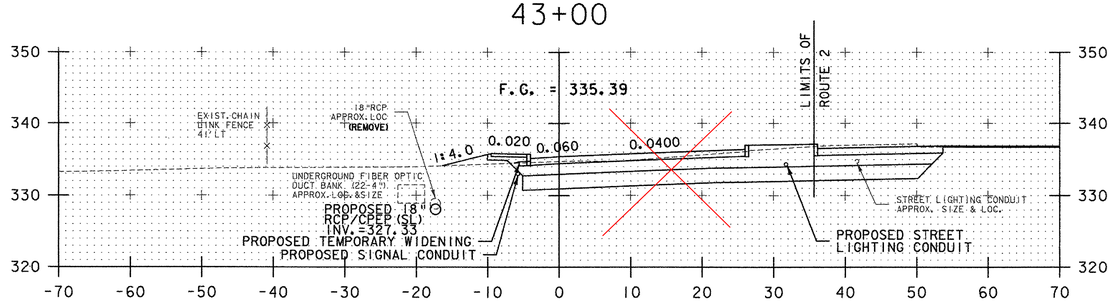

42+~~99~~.24 PCC

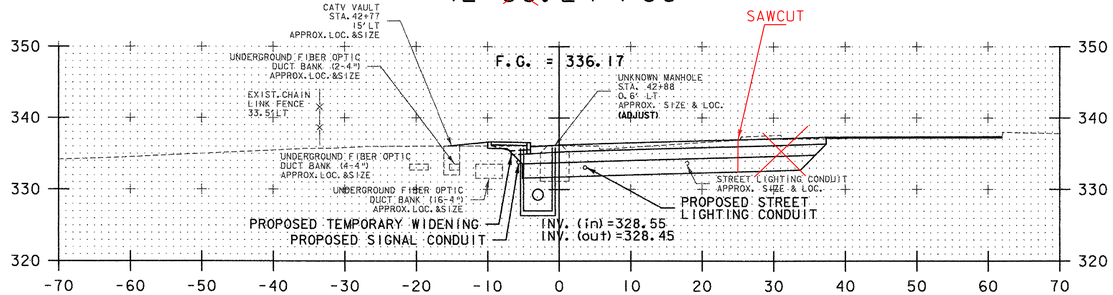

67.00
42+~~69~~.64
DI

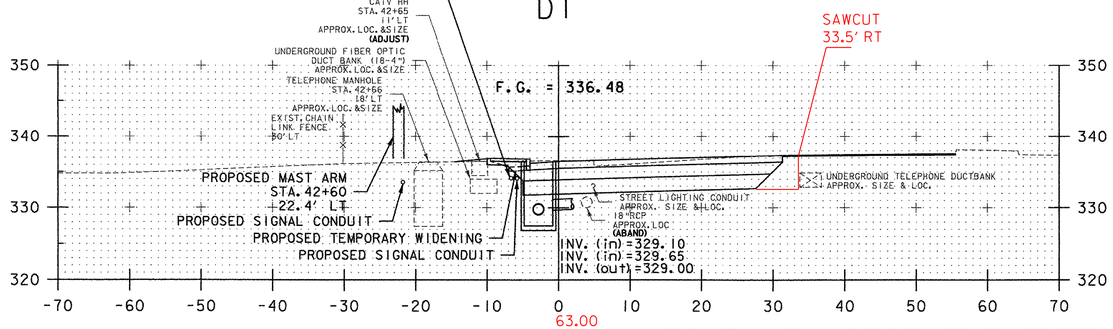

63.00
42+~~56~~.20
MH

RAMP "C" SECTIONS SHEET 2

DATUM

VERTICAL NAVD 88
HORIZONTAL NAD 83 (1996)

NOTE: REFER TO RAMP "C" TRAFFIC MANAGEMENT PLANS FOR TEMPORARY WIDENING WORK.

STA. 41+50 TO STA. 43+00

PROJECT NAME: SOUTH BURLINGTON
PROJECT NUMBER: IM 089-3(37)

FILE NAME: z03al78xs.dgn
PROJECT LEADER: KEN UPMAL
DESIGNED BY: E. ATKINS
PLOT DATE: 5/5/2006
DRAWN BY: E. ATKINS
CHECKED BY: K. ISHIKURA
SHEET 83 OF 99

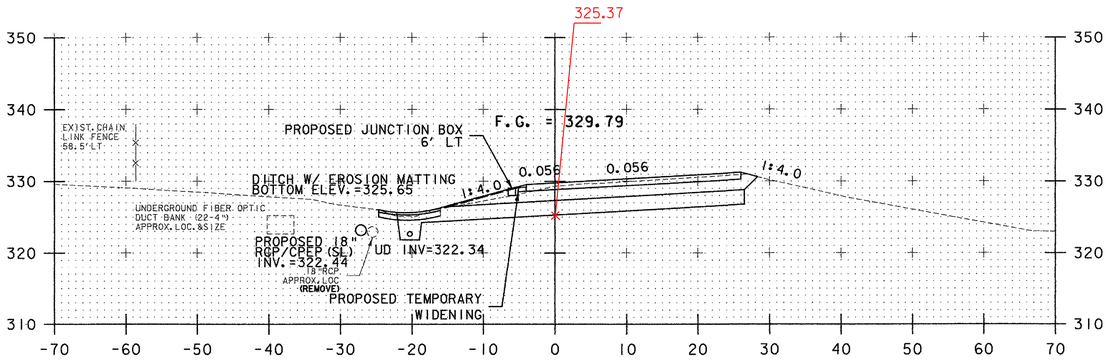

44+50

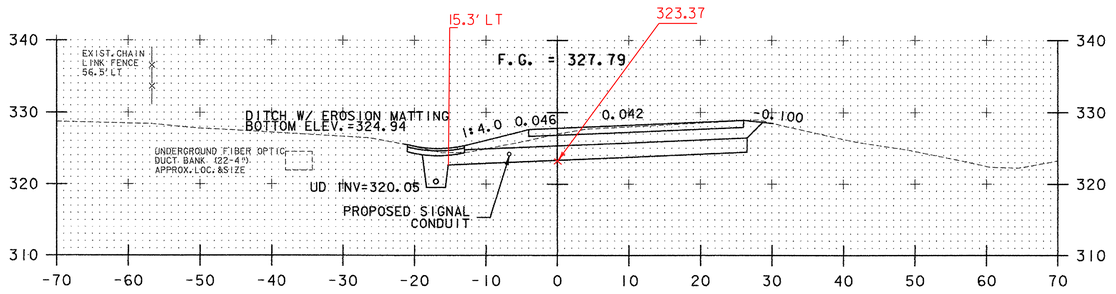

45+00

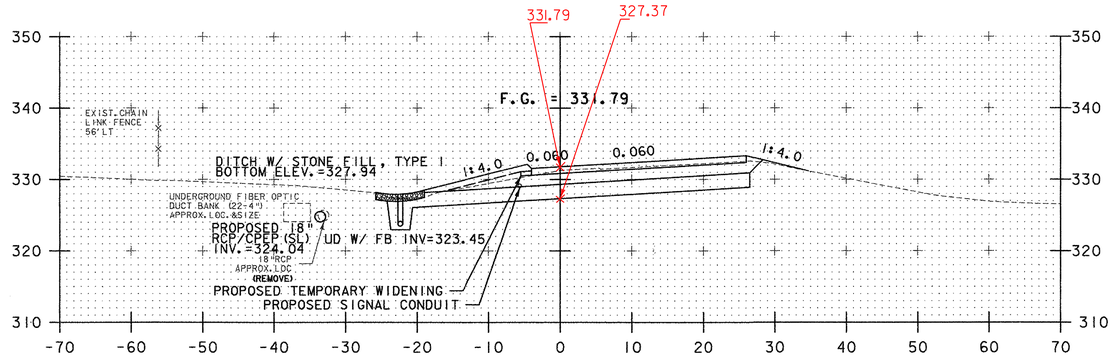

44+00

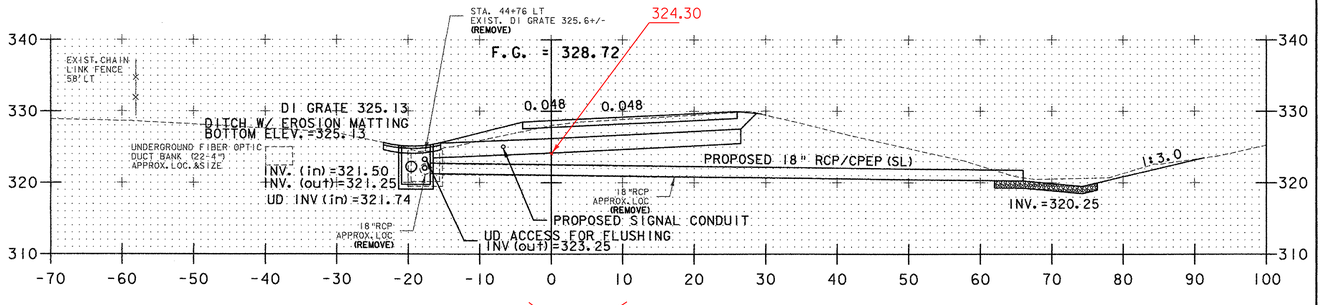

~~44+76.75~~
~~DI~~

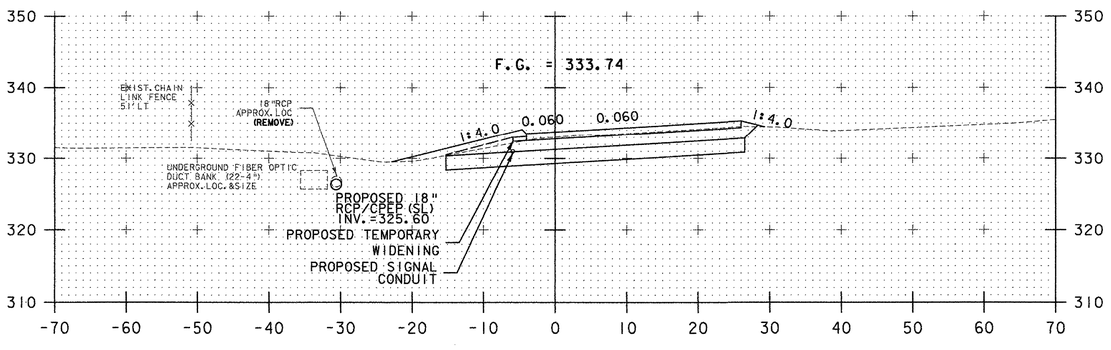

43+50

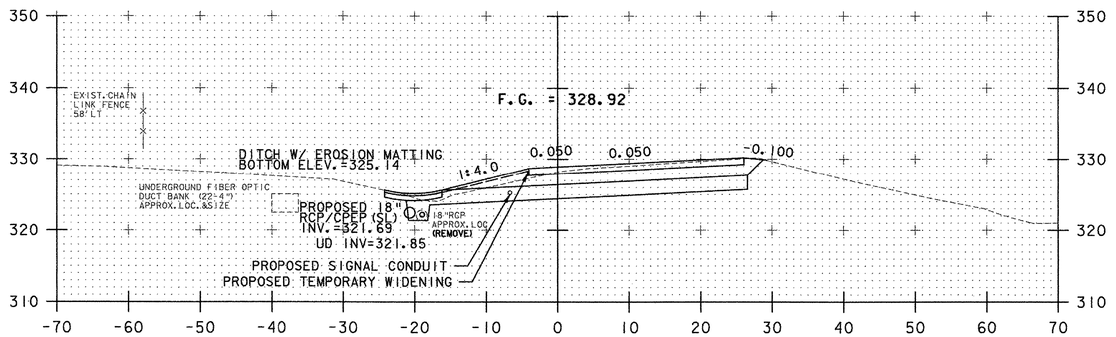

~~44+71.74 PT~~

0 10 20
SCALE IN FEET

DATUM

VERTICAL NAVD 88
HORIZONTAL NAD 83 (1996)

STA. 43+50 TO STA. 45+00

RAMP "C" SECTIONS SHEET 3

PROJECT NAME: SOUTH BURLINGTON
PROJECT NUMBER: IM 089-3(37)

FILE NAME: z03al78xs.dgn
PROJECT LEADER: KEN UPMAL
DESIGNED BY: E. ATKINS
PLOT DATE: 5/5/2006
DRAWN BY: E. ATKINS
CHECKED BY: K. ISHIKURA
SHEET 84 OF 99

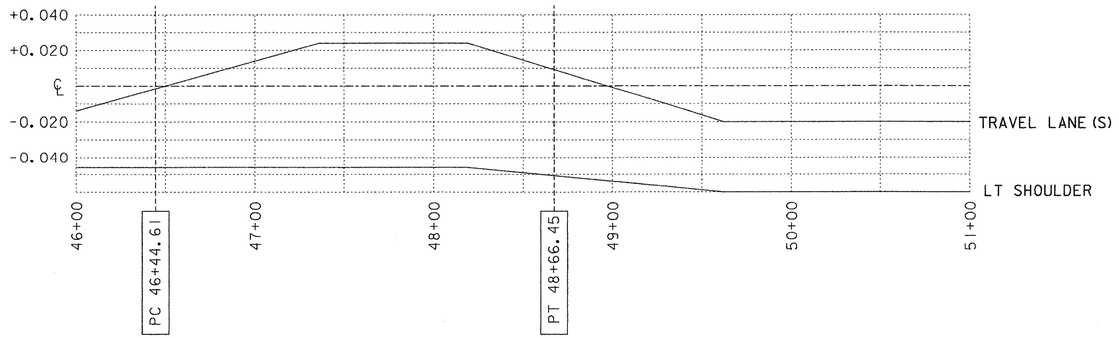

BANKING TRANSITION DETAIL

SCALE:
HORIZ.: 1" = 40'

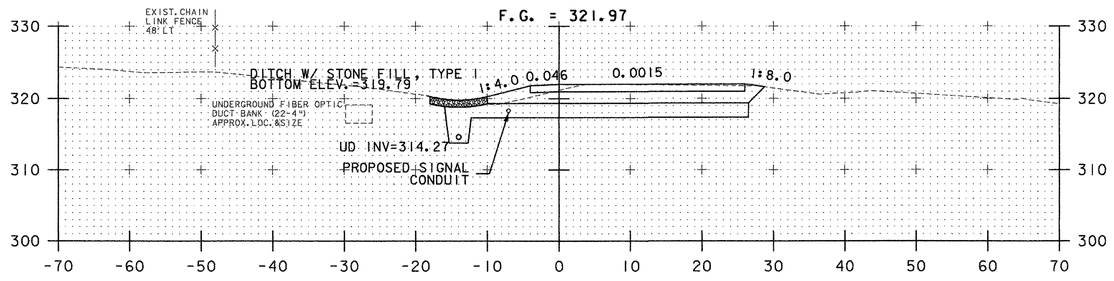

46+44.61 PC

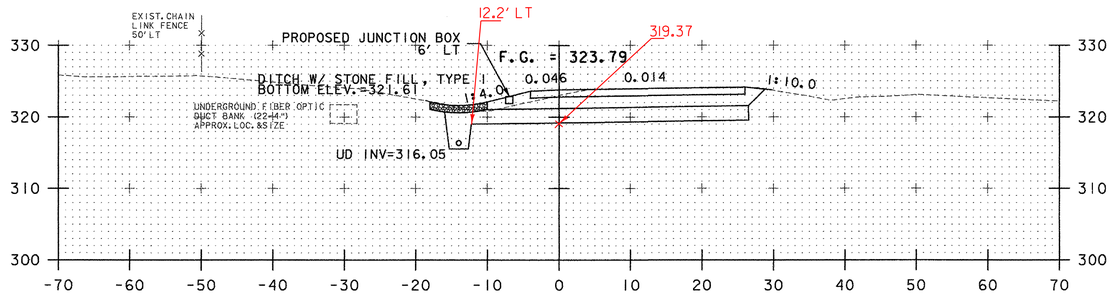

46+00

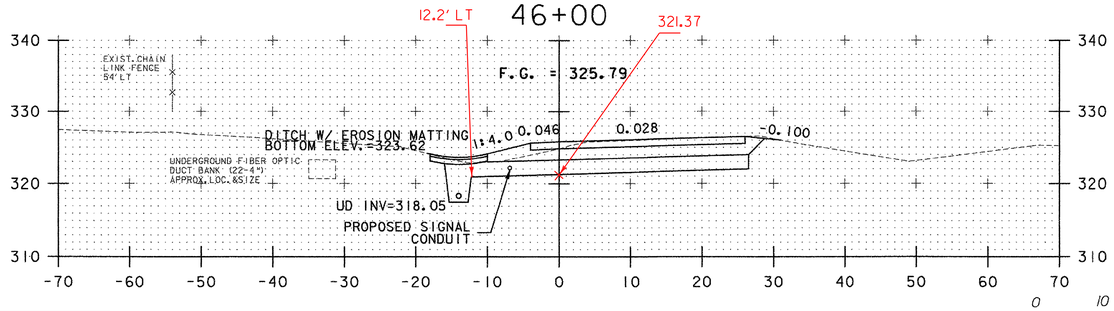

45+50

0 10 20
SCALE IN FEET

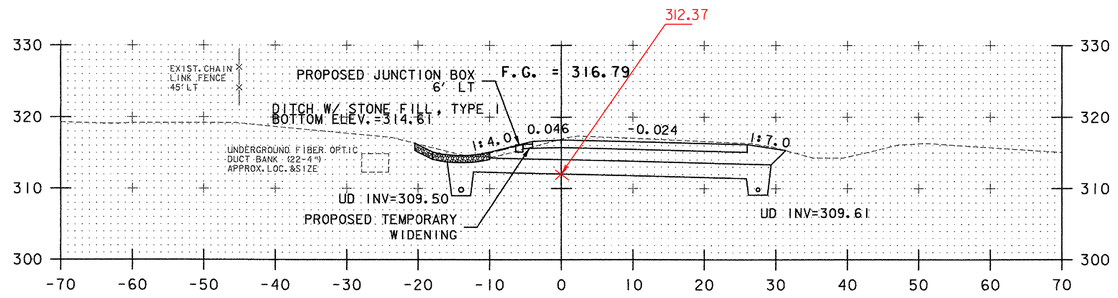

47+50

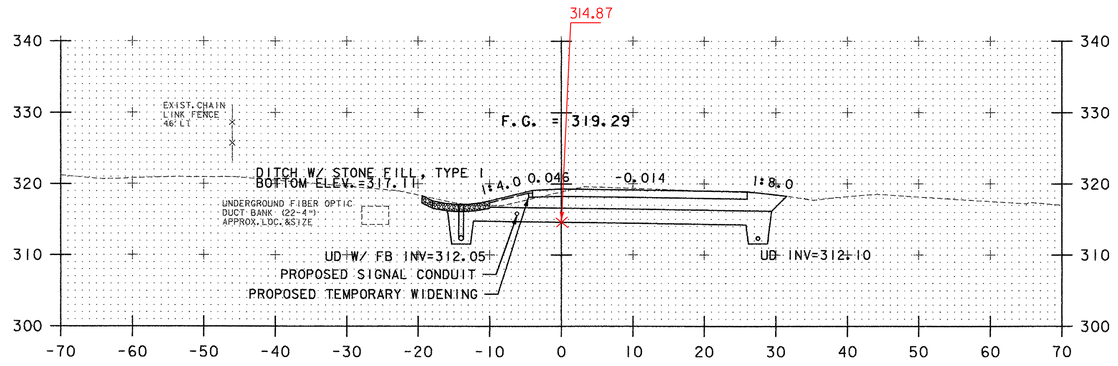

47+00

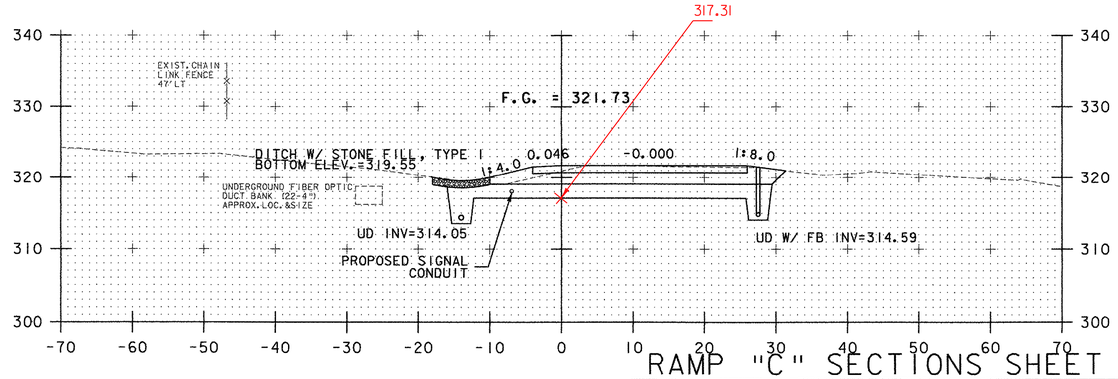

46+50

DATUM

VERTICAL NAVD 88
HORIZONTAL NAD 83 (1996)

NOTE: REFER TO RAMP "C" TRAFFIC MANAGEMENT PLANS FOR TEMPORARY WIDENING WORK.

STA. 45+50 TO STA. 47+50

RAMP "C" SECTIONS SHEET 4

PROJECT NAME: SOUTH BURLINGTON
PROJECT NUMBER: IM 089-3(37)

FILE NAME: z03al78xs.dgn
PROJECT LEADER: KEN UPMAL
DESIGNED BY: E. ATKINS
PLOT DATE: 5/5/2006
DRAWN BY: E. ATKINS
CHECKED BY: K. ISHIKURA
SHEET 85 OF 99

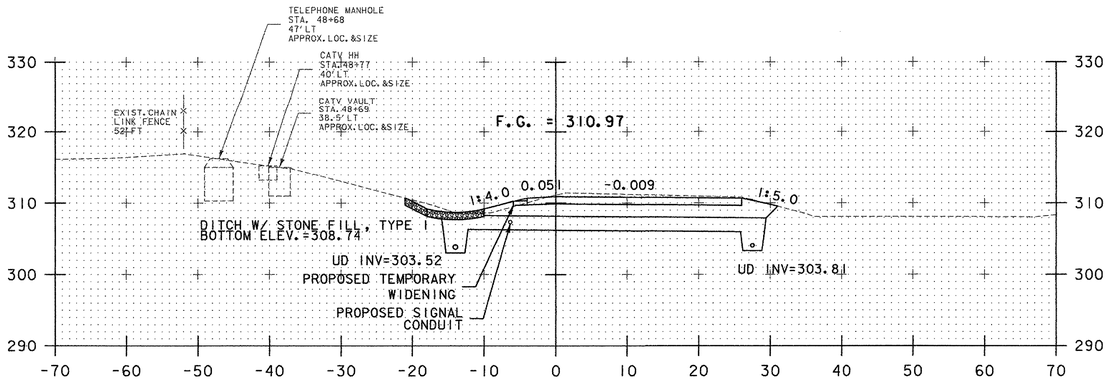

48+66.45 PT

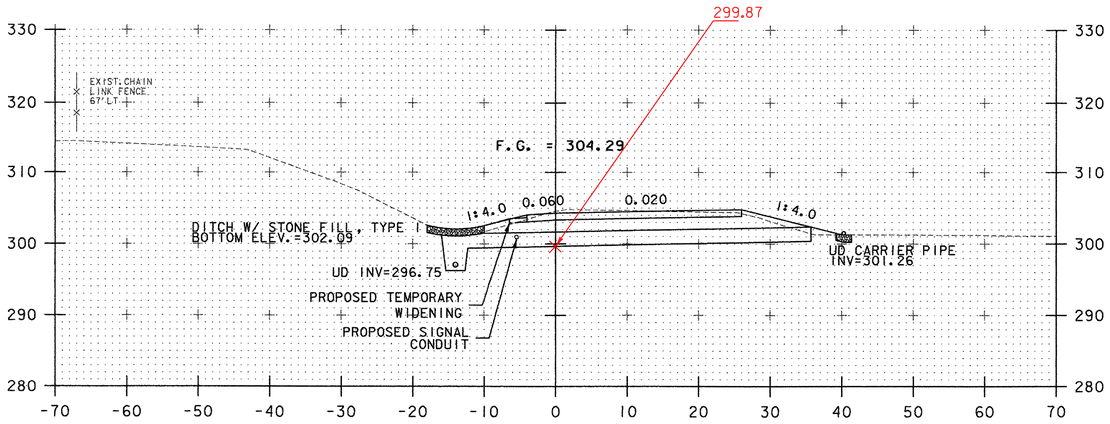

50+00

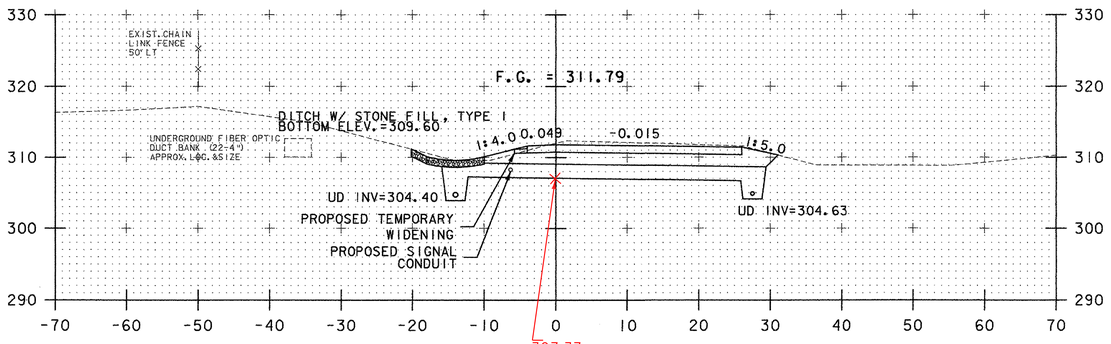

48+50

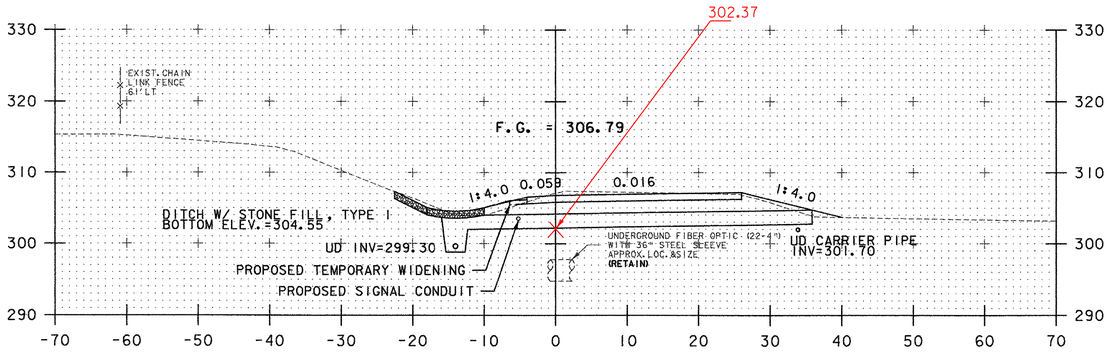

49+50

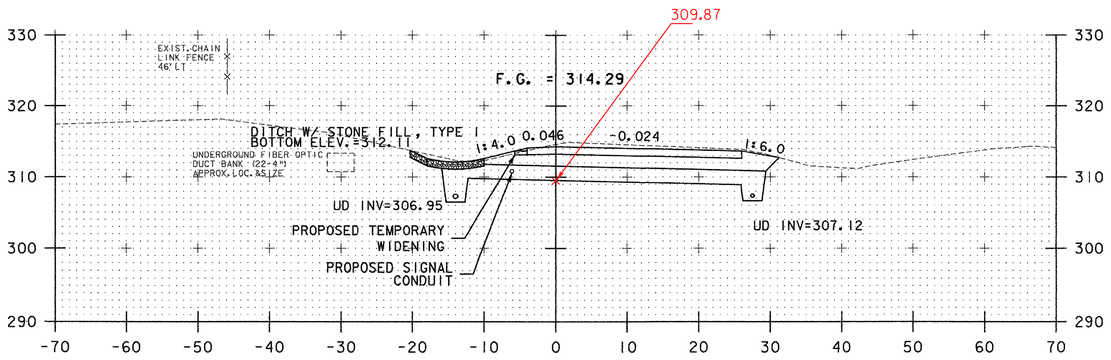

48+00

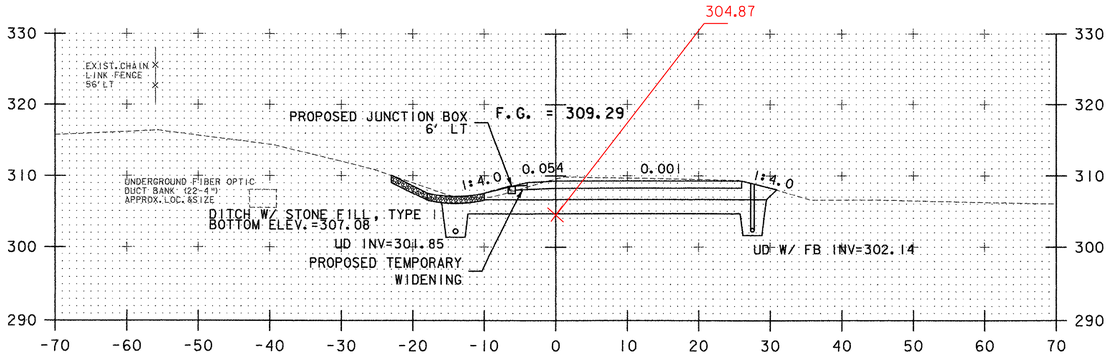

49+00

RAMP "C" SECTIONS SHEET 5

0 10 20
SCALE IN FEET

DATUM

VERTICAL NAVD 88
HORIZONTAL NAD 83 (1996)

STA. 48+00 TO STA. 50+00

PROJECT NAME: SOUTH BURLINGTON
PROJECT NUMBER: IM 089-3(37)

FILE NAME: z03al78xs.dgn
PROJECT LEADER: KEN UPMAL
DESIGNED BY: E. ATKINS
PLOT DATE: 5/5/2006
DRAWN BY: E. ATKINS
CHECKED BY: K. ISHIKURA
SHEET 86 OF 99

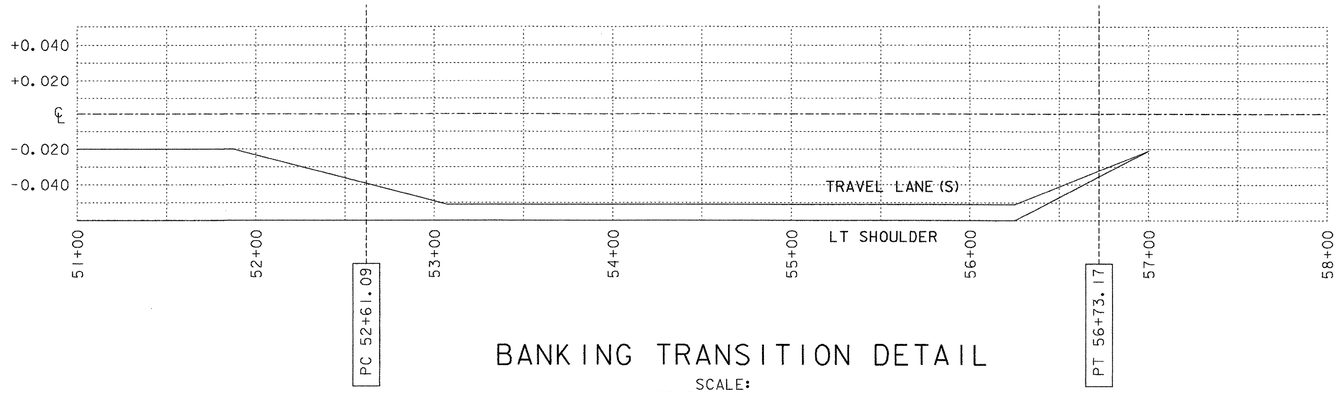

BANKING TRANSITION DETAIL

SCALE:
HORIZ.: 1" = 40'

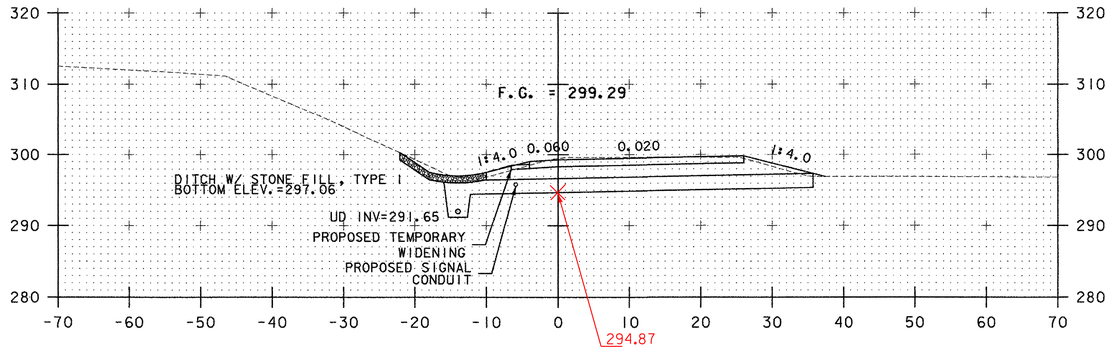

51+00

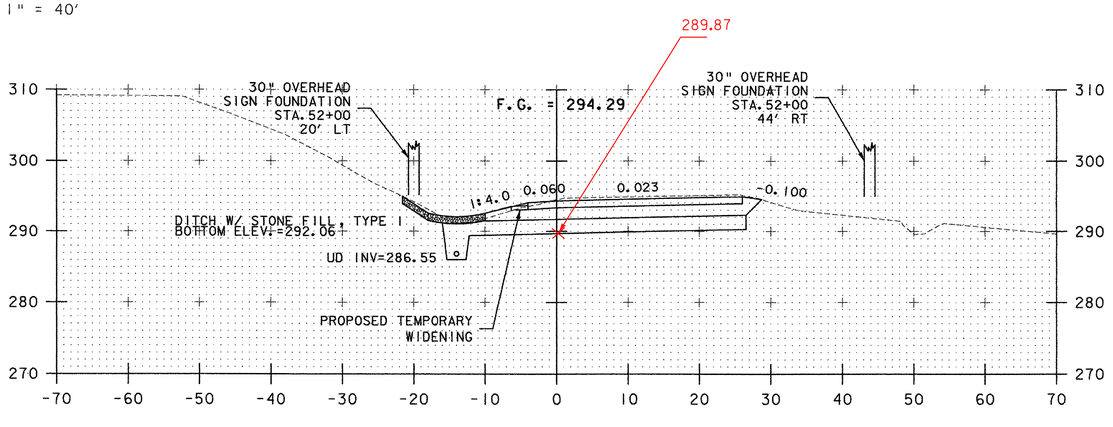

52+00

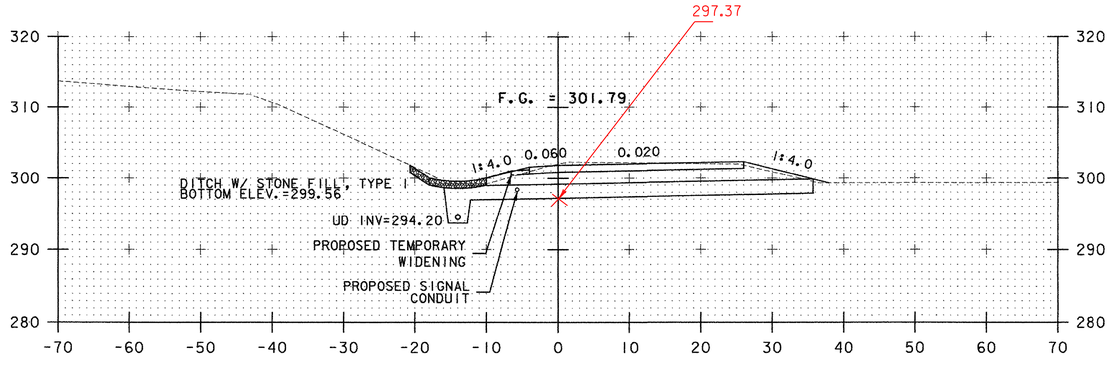

50+50

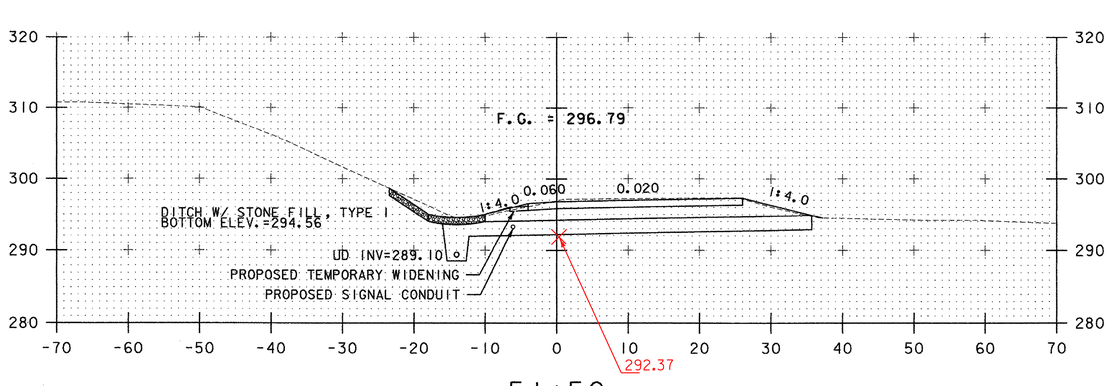

51+50

0 10 20
SCALE IN FEET

STA. 50+50 TO STA. 52+00

RAMP "C" SECTIONS SHEET 6

PROJECT NAME:	SOUTH BURLINGTON
PROJECT NUMBER:	IM 089-3(37)

FILE NAME: z03al78xs.dgn	PLOT DATE: 5/5/2006
PROJECT LEADER: KEN UPMAL	DRAWN BY: E. ATKINS
DESIGNED BY: E. ATKINS	CHECKED BY: K. ISHIKURA
	SHEET 87 OF 99

DATUM

VERTICAL NAVD 88
HORIZONTAL NAD 83 (1996)

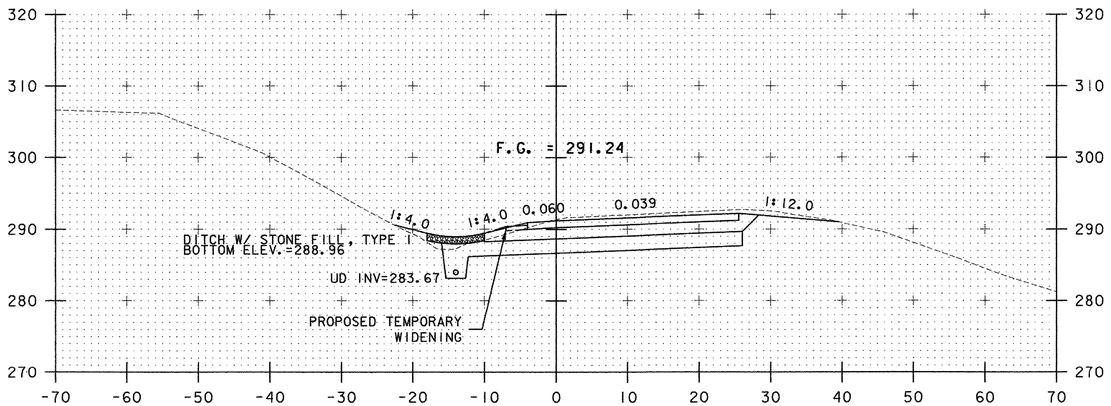

52+61.09 PC

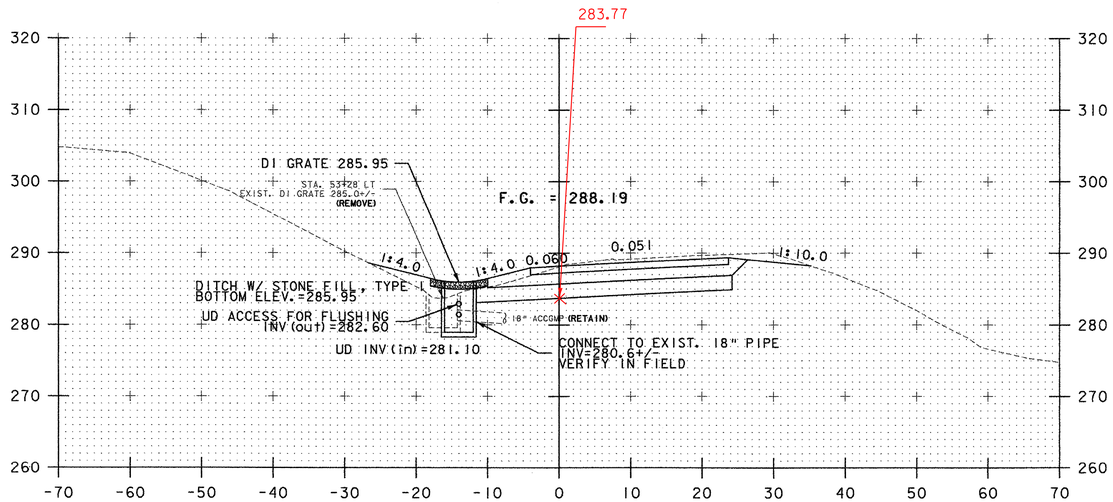

53+27.08
DI

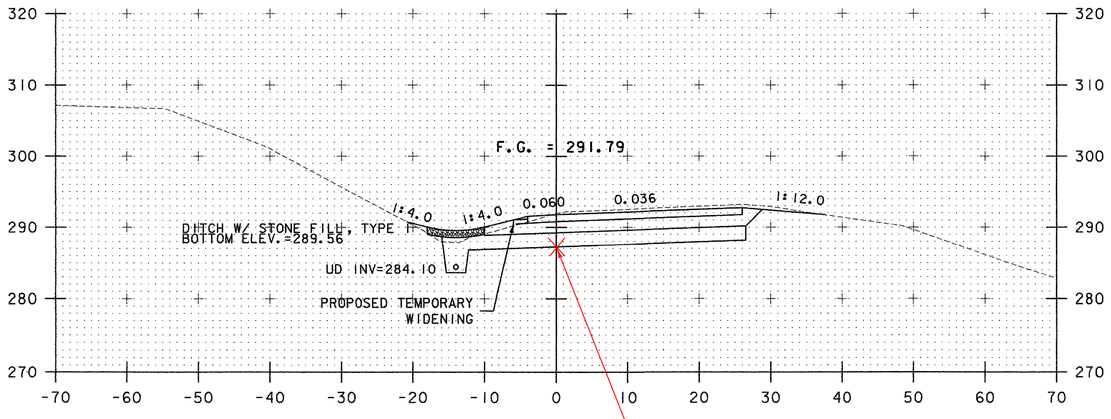

52+50

287.37

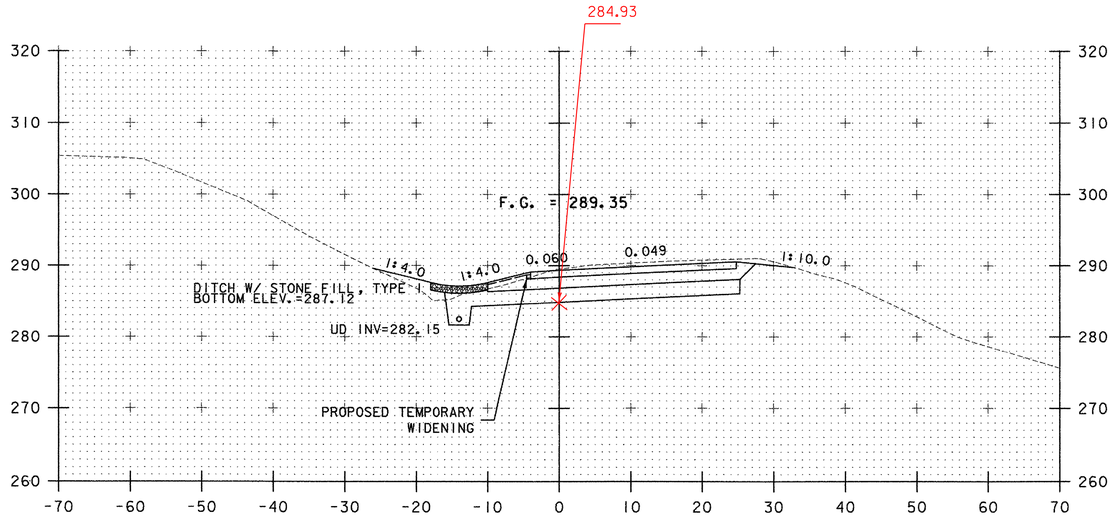

53+00

0 10 20
SCALE IN FEET

DATUM

VERTICAL NAVD 88
HORIZONTAL NAD 83 (1996)

STA. 52+50 TO STA. 53+27.08

RAMP "C" SECTIONS SHEET 7

PROJECT NAME: SOUTH BURLINGTON
PROJECT NUMBER: IM 089-3(37)

FILE NAME: z03al78xs.dgn
PROJECT LEADER: KEN UPMAL
DESIGNED BY: E. ATKINS

PLOT DATE: 5/5/2006
DRAWN BY: E. ATKINS
CHECKED BY: K. ISHIKURA
SHEET 88 OF 99

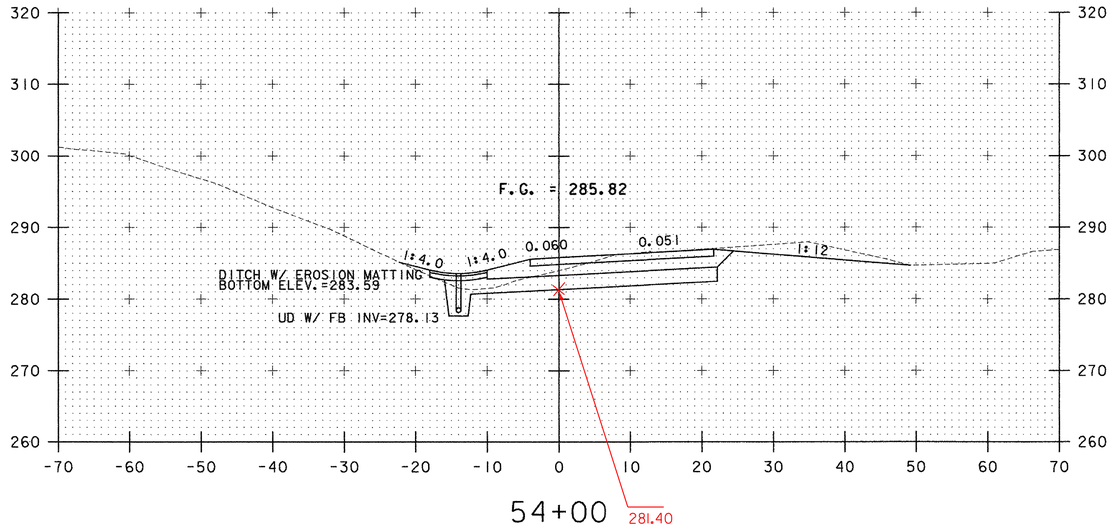

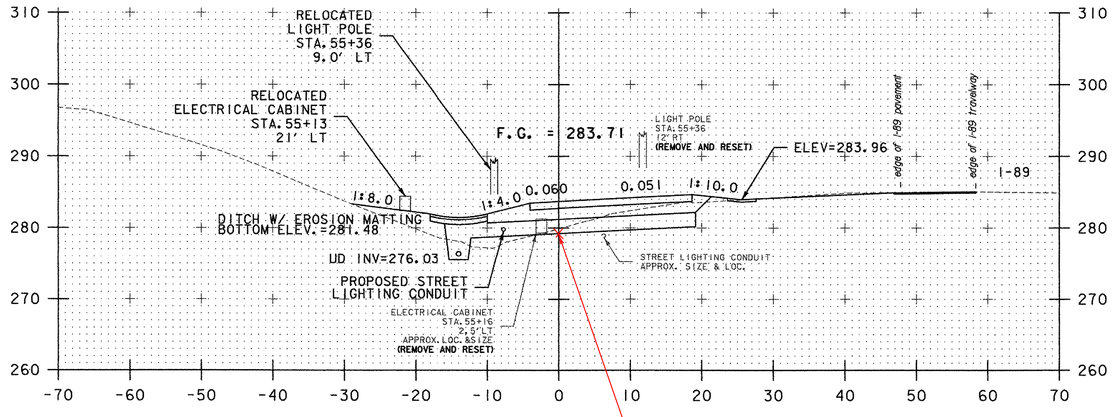

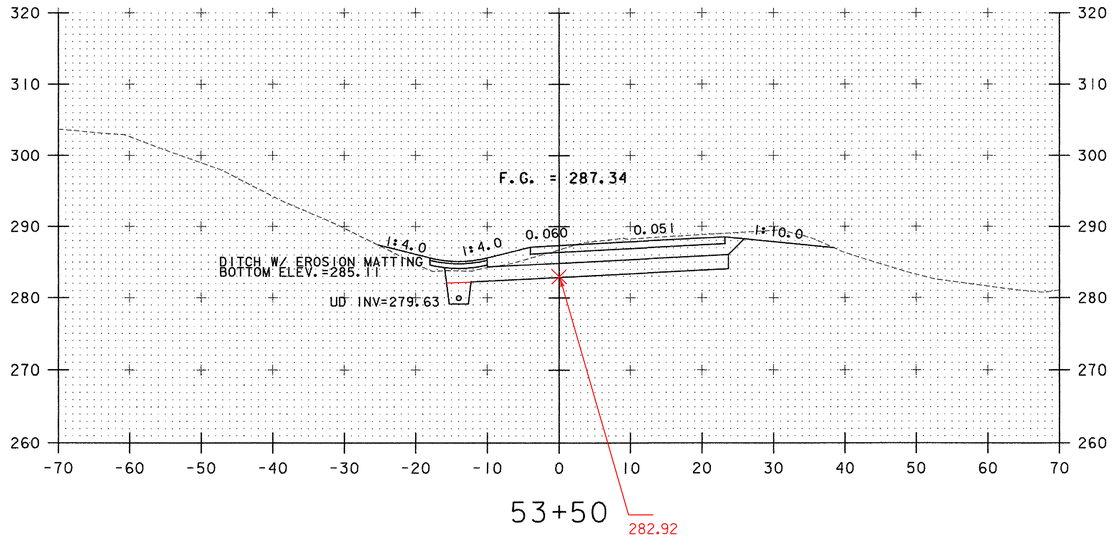

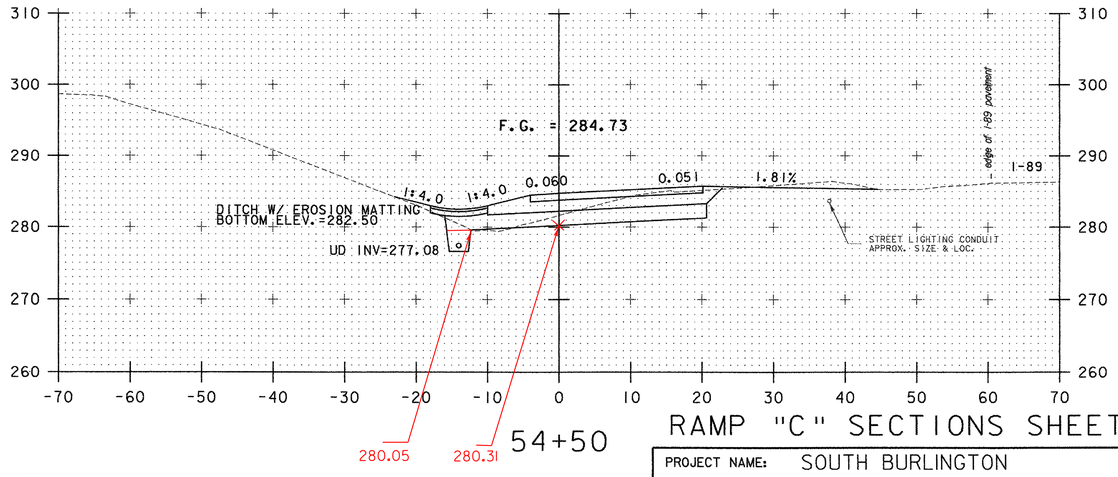

0 10 20
SCALE IN FEET

DATUM

VERTICAL NAVD 88
HORIZONTAL NAD 83 (1996)

STA. 53+50 TO STA. 55+00

RAMP "C" SECTIONS SHEET 8

PROJECT NAME: SOUTH BURLINGTON
PROJECT NUMBER: IM 089-3(37)

FILE NAME: z03al78xs.dgn
PROJECT LEADER: KEN UPMAL
DESIGNED BY: E. ATKINS
PLOT DATE: 5/5/2006
DRAWN BY: E. ATKINS
CHECKED BY: K. ISHIKURA
SHEET 89 OF 99

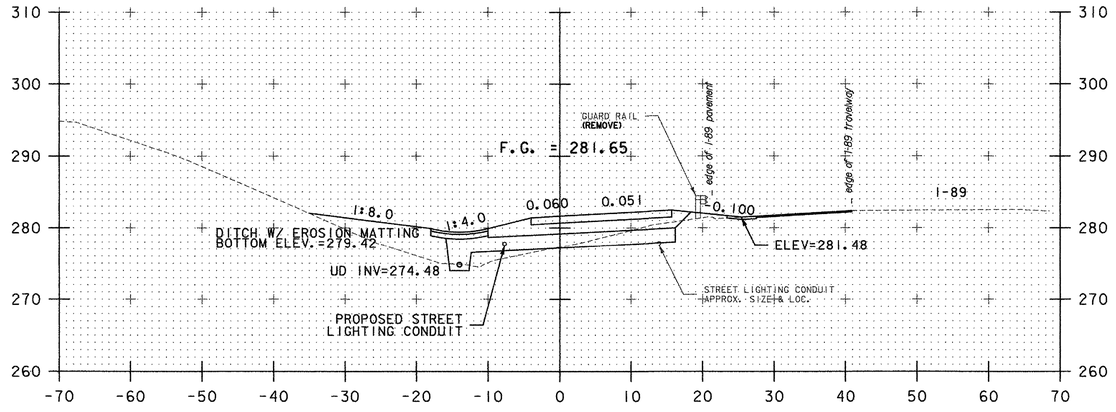

56+00

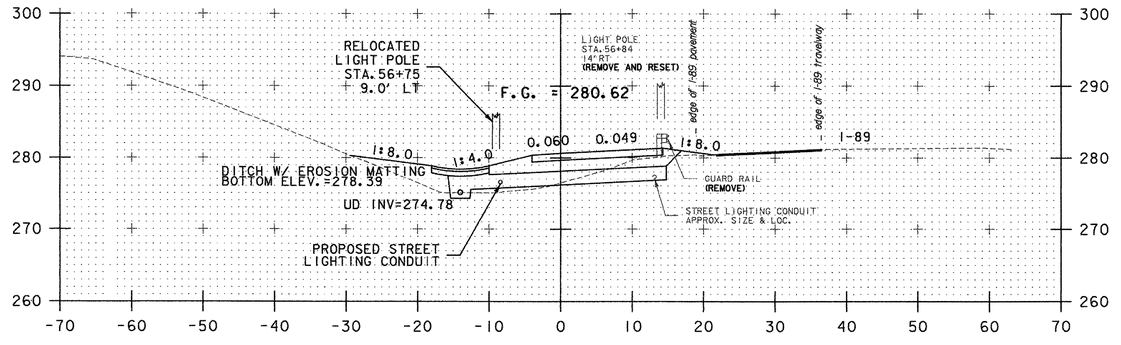

56+50

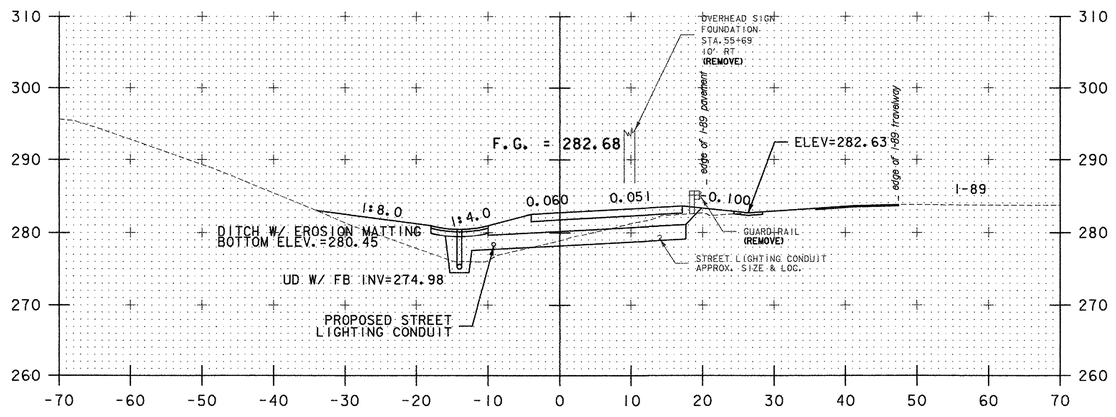

55+50

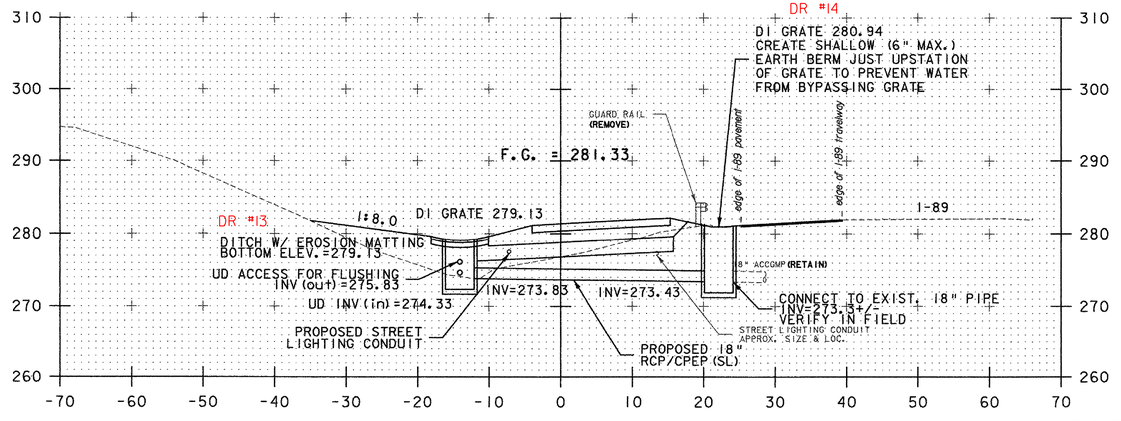

56+15.75
DI
SKEWED 6°43'01.9"

0 10 20
SCALE IN FEET

STA. 55+50 TO STA. 56+50

RAMP "C" SECTIONS SHEET 9

DATUM

VERTICAL NAVD 88
HORIZONTAL NAD 83 (1996)

PROJECT NAME: SOUTH BURLINGTON
PROJECT NUMBER: IM 089-3(37)

FILE NAME: z03al78xs.dgn
PROJECT LEADER: KEN UPMAL
DESIGNED BY: E. ATKINS

PLOT DATE: 5/5/2006
DRAWN BY: E. ATKINS
CHECKED BY: K. ISHIKURA
SHEET 90 OF 99

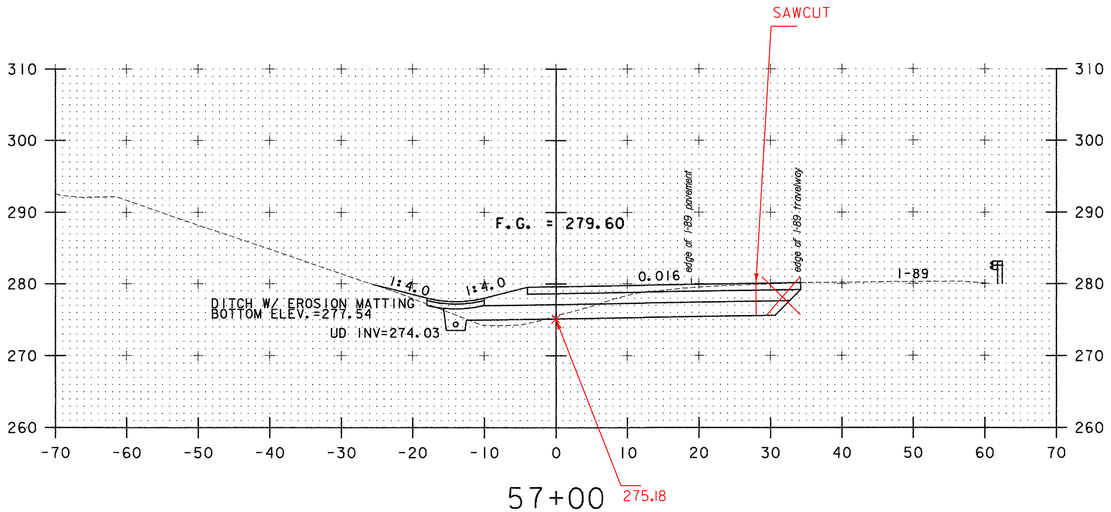

57+00

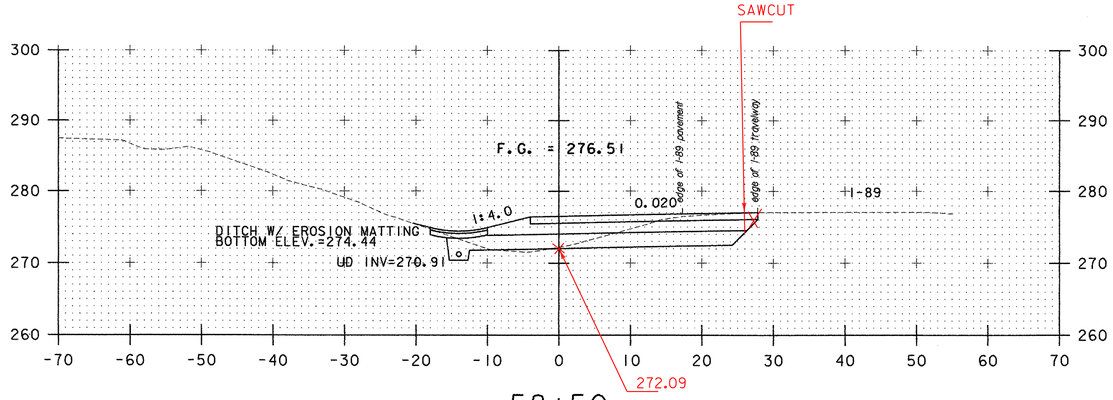

58+50

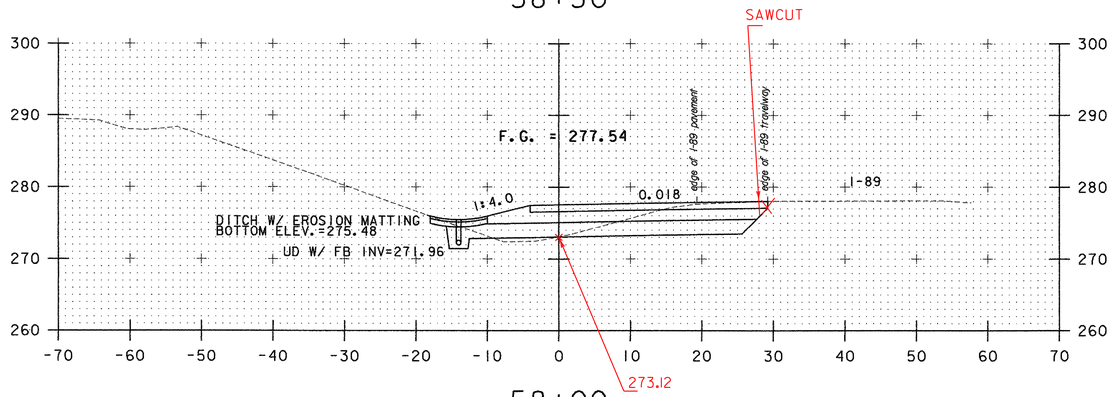

58+00

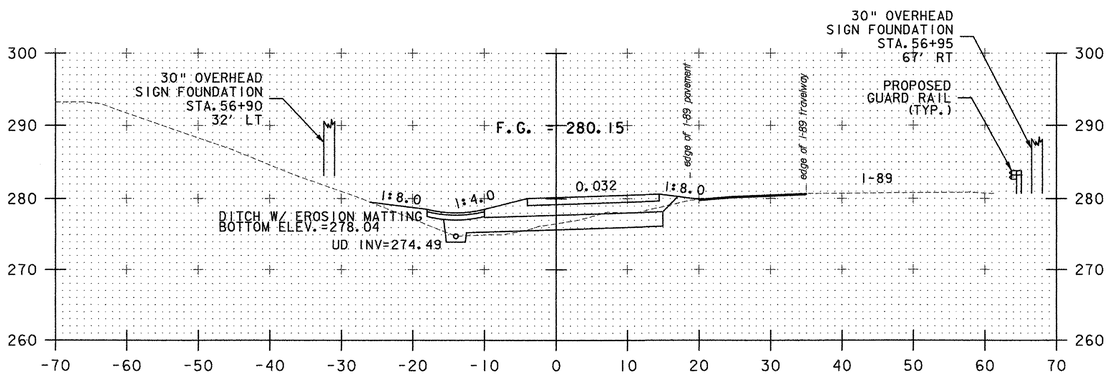

56+73.17 PT

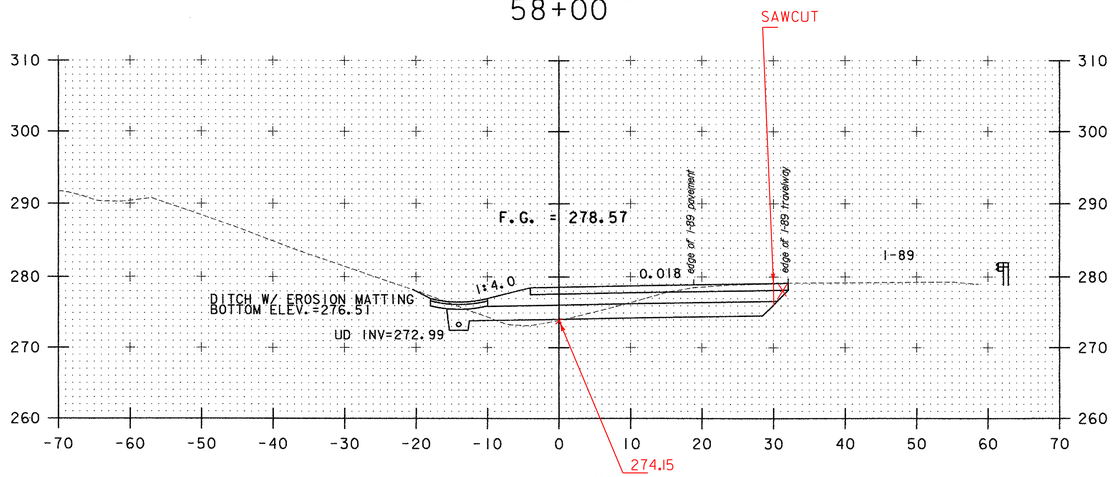

57+50

RAMP "C" SECTIONS SHEET 10

0 10 20
SCALE IN FEET

DATUM

VERTICAL NAVD 88
HORIZONTAL NAD 83 (1996)

STA. 56+73.17 TO STA. 58+50

PROJECT NAME: SOUTH BURLINGTON
PROJECT NUMBER: IM 089-3(37)

FILE NAME: z03al78xs.dgn
PROJECT LEADER: KEN UPMAL
DESIGNED BY: E. ATKINS
PLOT DATE: 5/5/2006
DRAWN BY: E. ATKINS
CHECKED BY: K. ISHIKURA
SHEET 91 OF 99

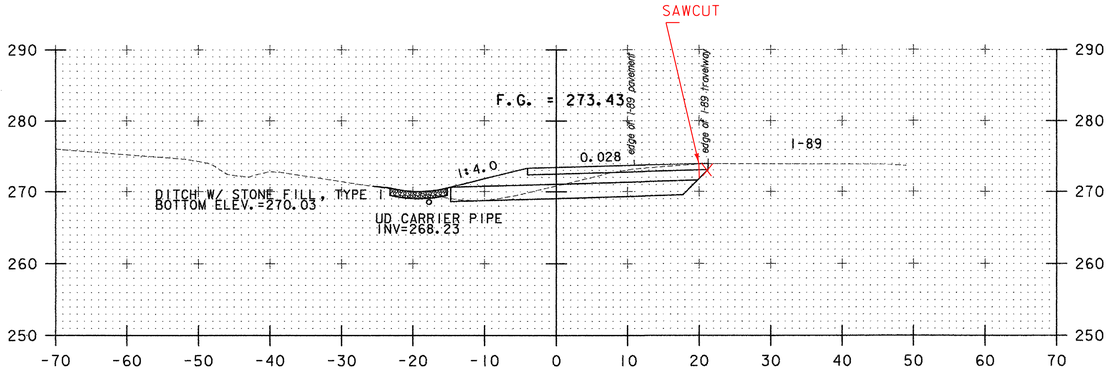

60+00

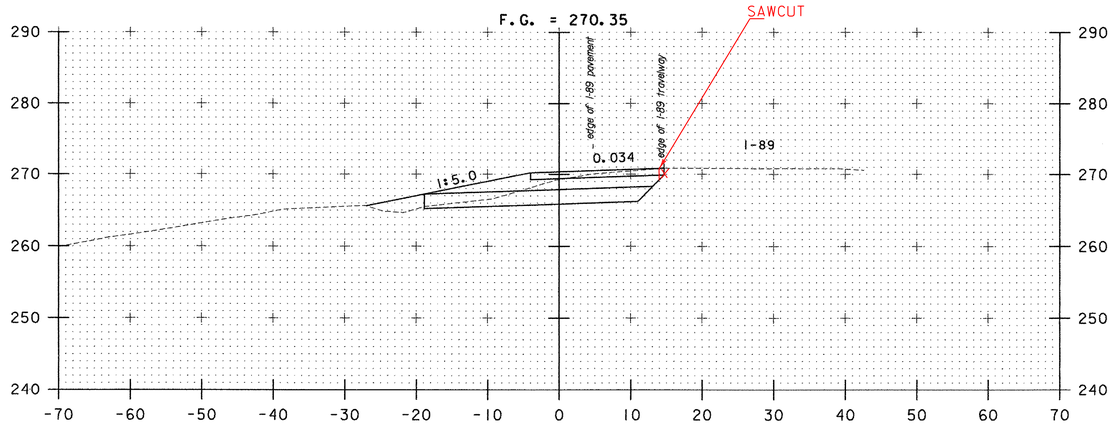

61+50

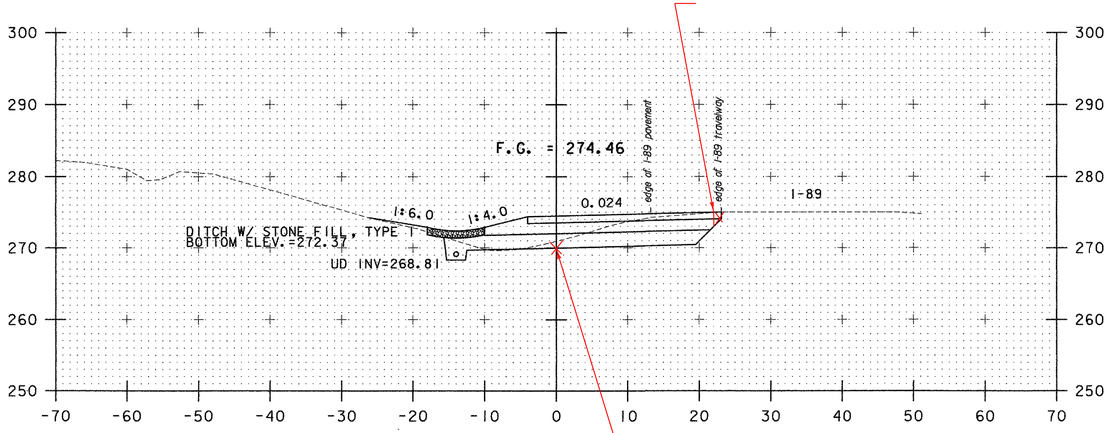

59+50

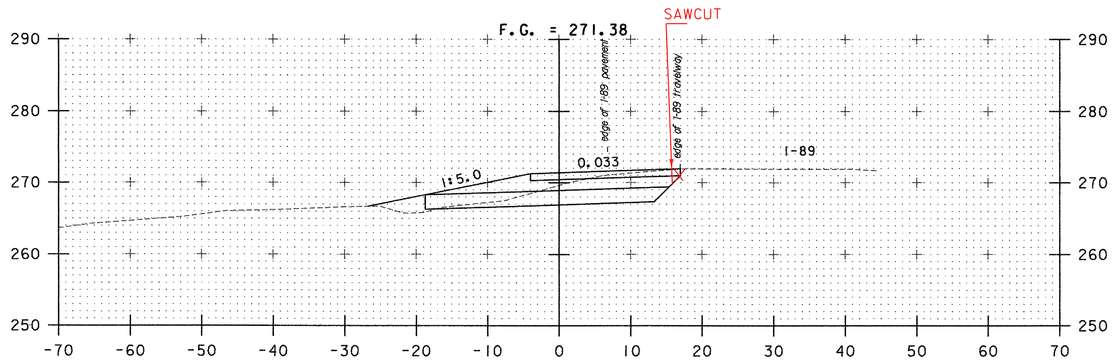

61+00

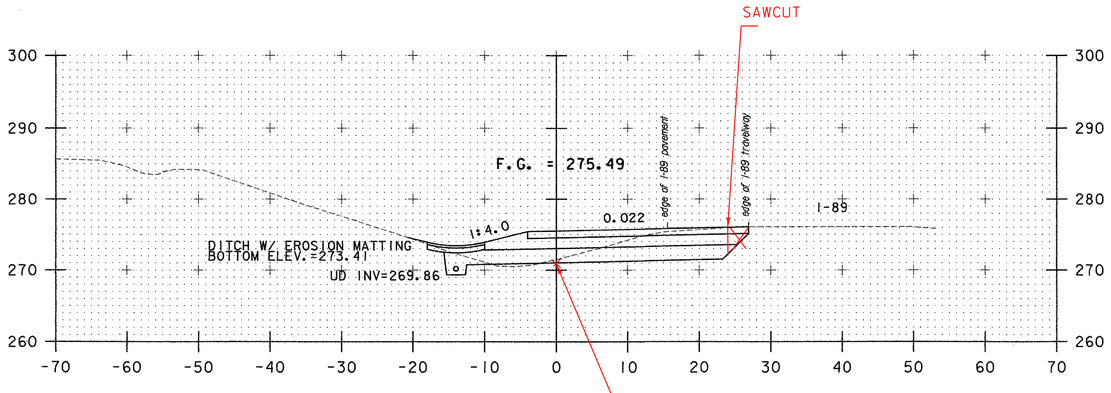

59+00

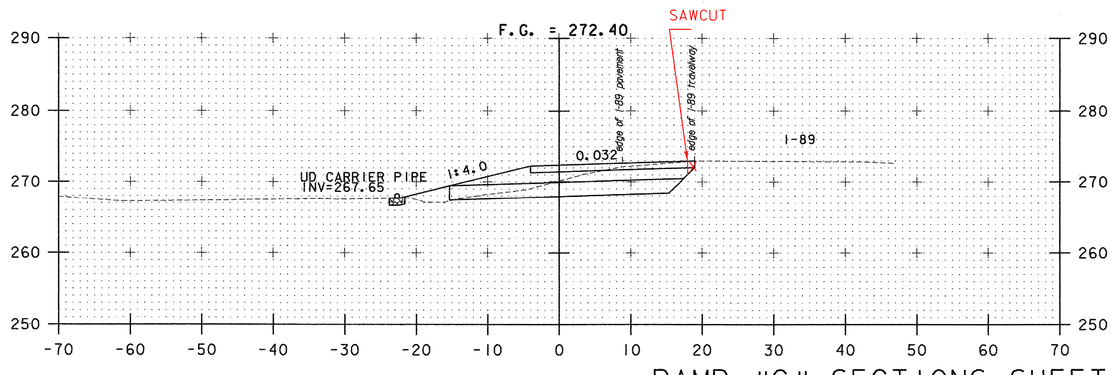

60+50

RAMP "C" SECTIONS SHEET 11

DATUM

VERTICAL NAVD 88
HORIZONTAL NAD 83 (1996)

0 10 20
SCALE IN FEET

STA. 59+00 TO STA. 61+50

PROJECT NAME: SOUTH BURLINGTON
PROJECT NUMBER: IM 089-3(37)

FILE NAME: z03al78xs.dgn
PROJECT LEADER: KEN UPMAL
DESIGNED BY: E. ATKINS
PLOT DATE: 5/5/2006
DRAWN BY: E. ATKINS
CHECKED BY: K. ISHIKURA
SHEET 92 OF 99

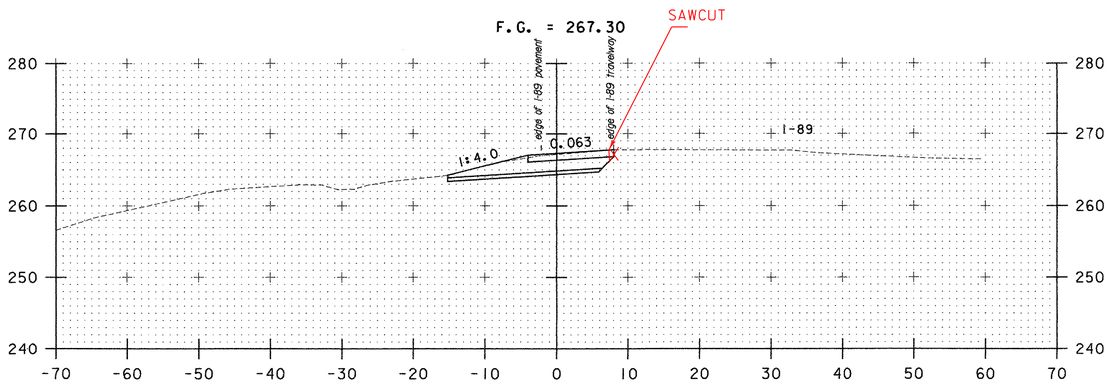

63+00

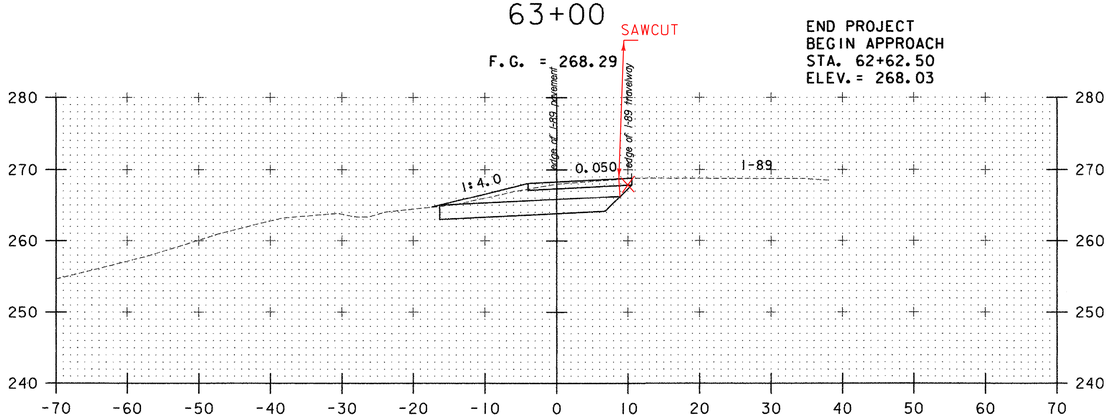

62+50

END PROJECT
BEGIN APPROACH
STA. 62+62.50
ELEV. = 268.03

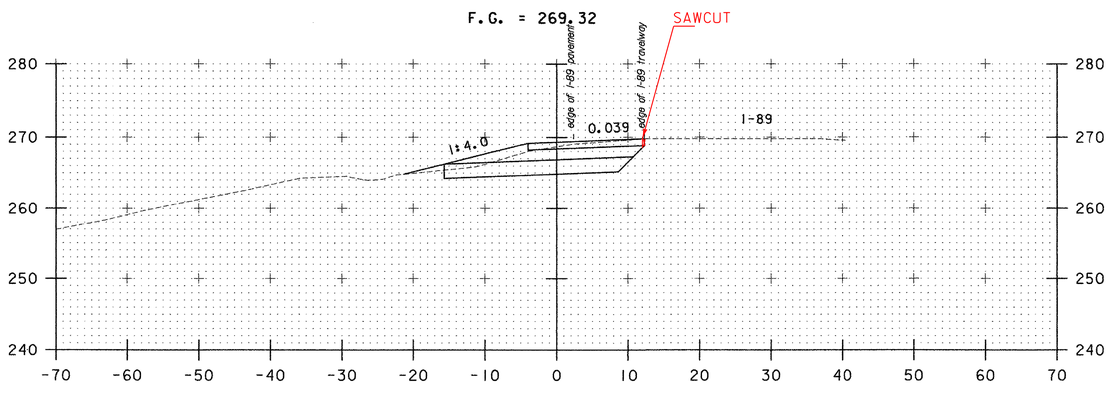

62+00

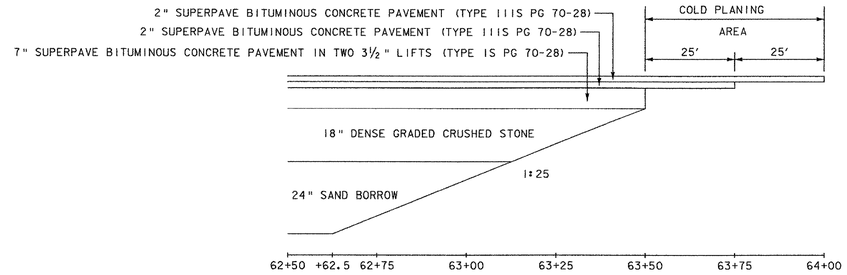

MATERIAL TRANSITION DETAIL

NOT TO SCALE

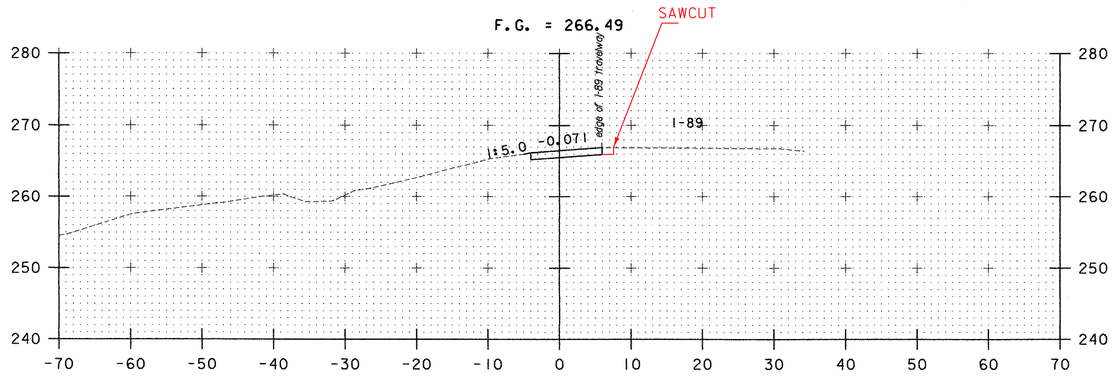

63+50

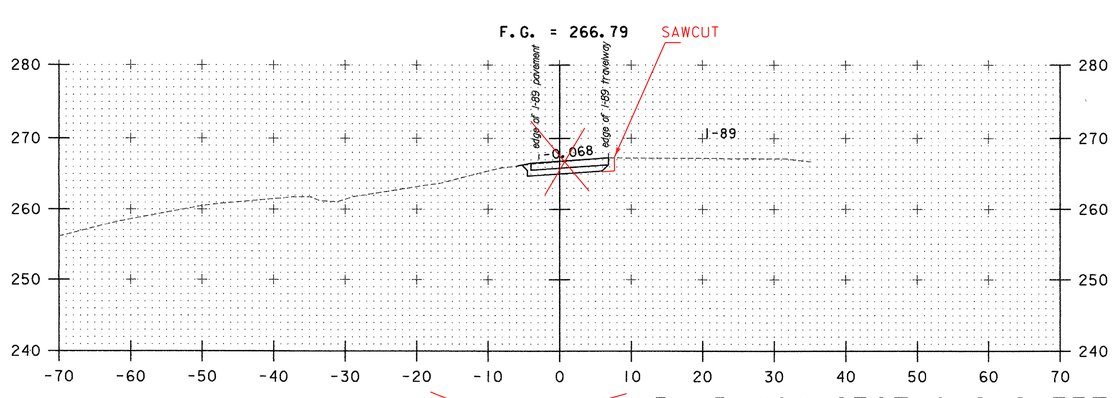

63+30.41 PC

RAMP "C" SECTIONS SHEET 12

0 10 20
SCALE IN FEET

DATUM

VERTICAL NAVD 88
HORIZONTAL NAD 83 (1996)

STA. 62+00 TO STA. 63+50

PROJECT NAME: SOUTH BURLINGTON
PROJECT NUMBER: IM 089-3(37)

FILE NAME: z03al78xs.dgn
PROJECT LEADER: KEN UPMAL
DESIGNED BY: E. ATKINS
PLOT DATE: 5/5/2006
DRAWN BY: E. ATKINS
CHECKED BY: K. ISHIKURA
SHEET 93 OF 99

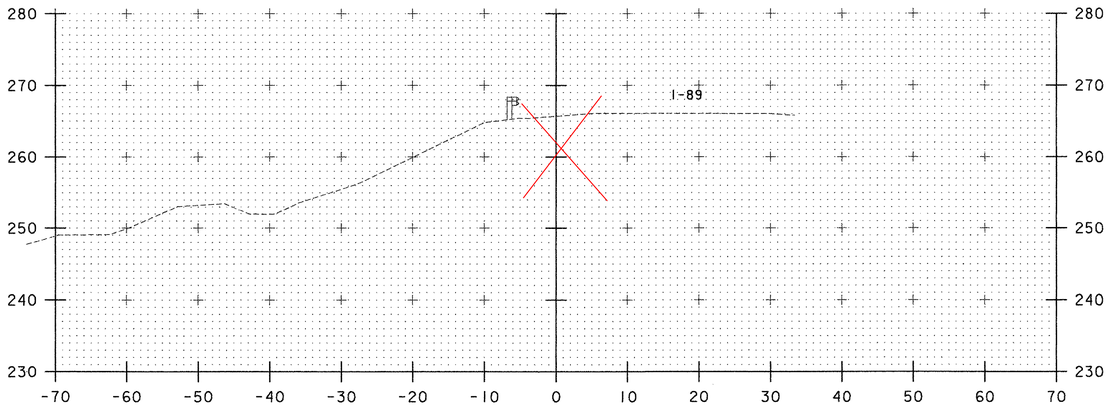

64+01.84 PT

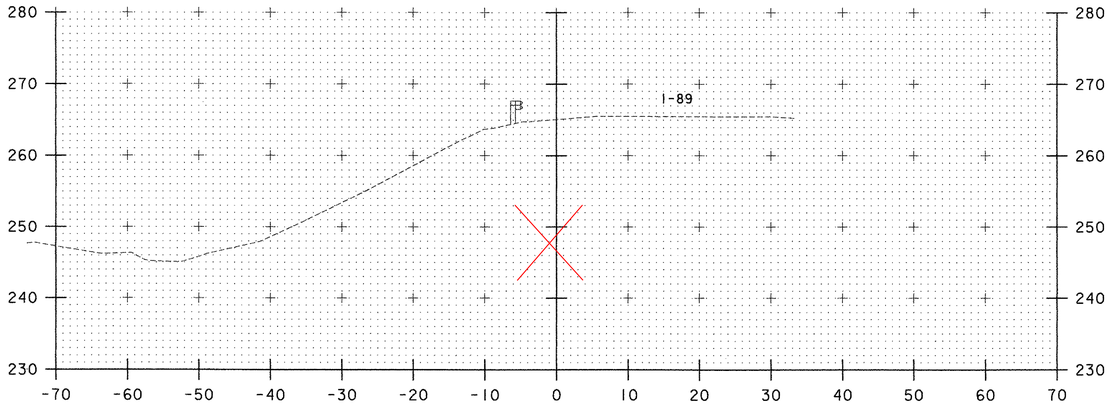

64+50

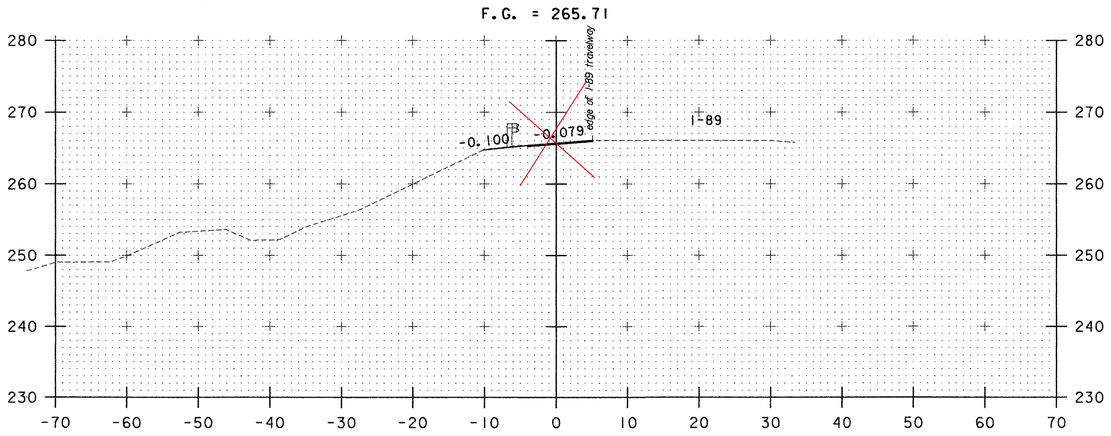

64+00

END APPROACH

MATCH EXISTING BCP

0 10 20

SCALE IN FEET

STA. 64+00 TO STA. 64+50

DATUM

VERTICAL NAVD 88

HORIZONTAL NAD 83 (1996)

RAMP "C" SECTIONS SHEET 13

PROJECT NAME: SOUTH BURLINGTON

PROJECT NUMBER: IM 089-3(37)

FILE NAME: z03al78xs.dgn

PROJECT LEADER: KEN UPMAL

DESIGNED BY: E. ATKINS

PLOT DATE: 5/5/2006

DRAWN BY: E. ATKINS

CHECKED BY: K. ISHIKURA

SHEET 94 OF 99

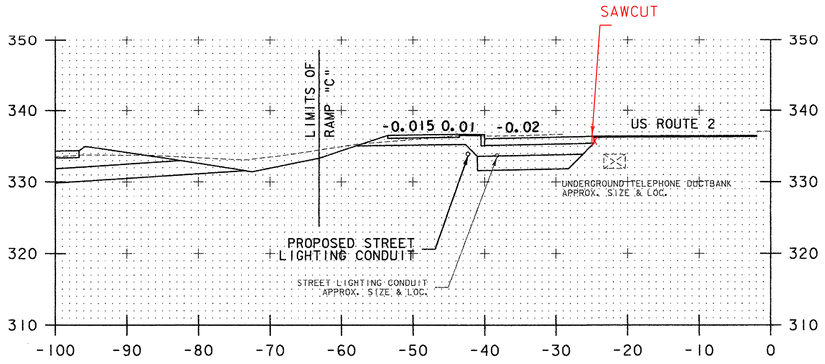

22+00

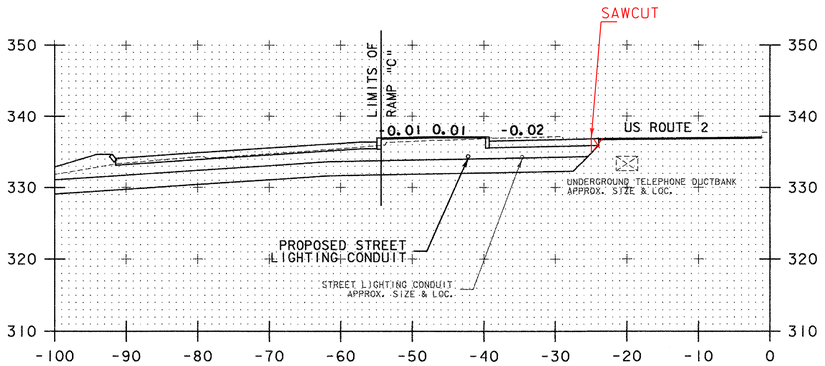

21+50

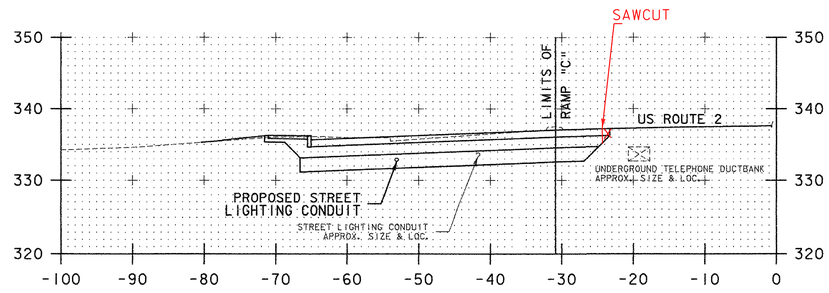

21+05
BEGIN WIDENING

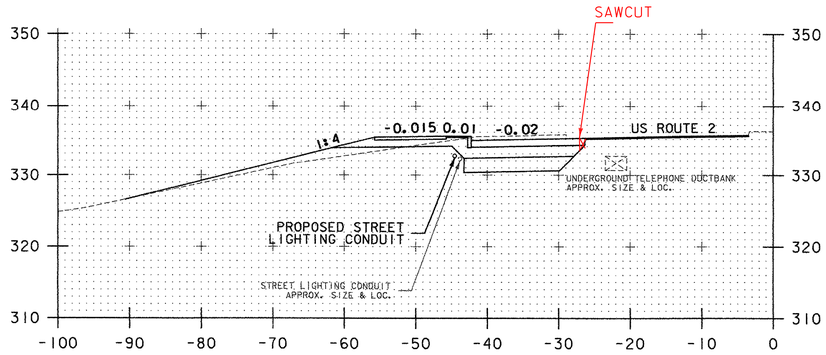

23+00

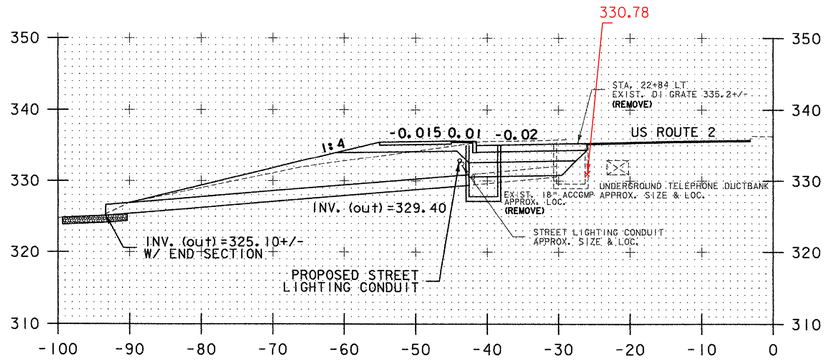

~~22+84~~
~~D1~~

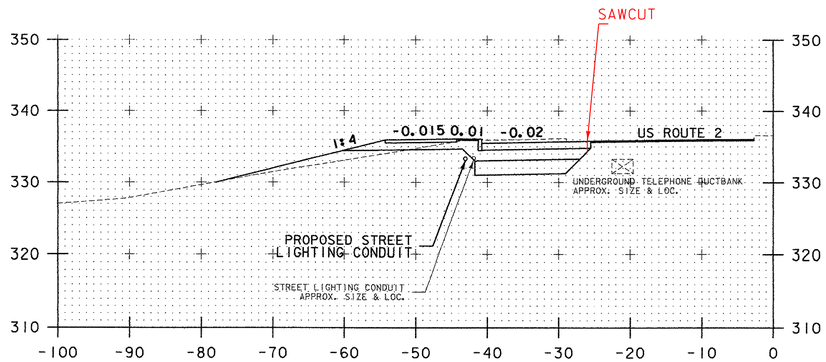

22+50

0 10 20
SCALE IN FEET

STA. 21+05 TO STA. 23+00

US RTE 2 SECTIONS SHEET 1

DATUM

VERTICAL NAVD 88
HORIZONTAL NAD 83 (1996)

PROJECT NAME: SOUTH BURLINGTON
PROJECT NUMBER: IM 089-3(37)

FILE NAME: z03al78xs.dgn
PROJECT LEADER: KEN UPMAL
DESIGNED BY: E. ATKINS
PLOT DATE: 5/5/2006
DRAWN BY: E. ATKINS
CHECKED BY: K. ISHIKURA
SHEET 95 OF 99

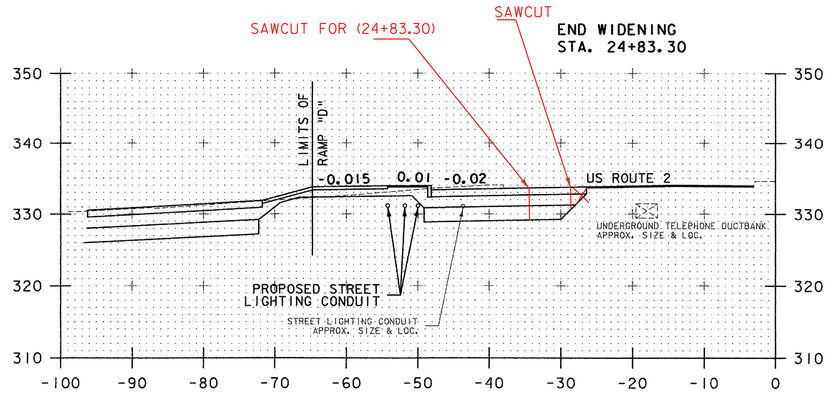

USE FOR STA 24+83.30 ALSO

24+50

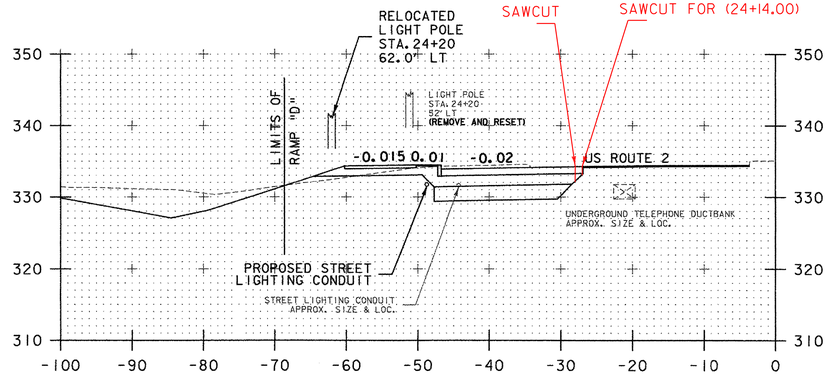

USE FOR STA 24+14 ALSO
W/ SAWCUT 27' LT

24+00

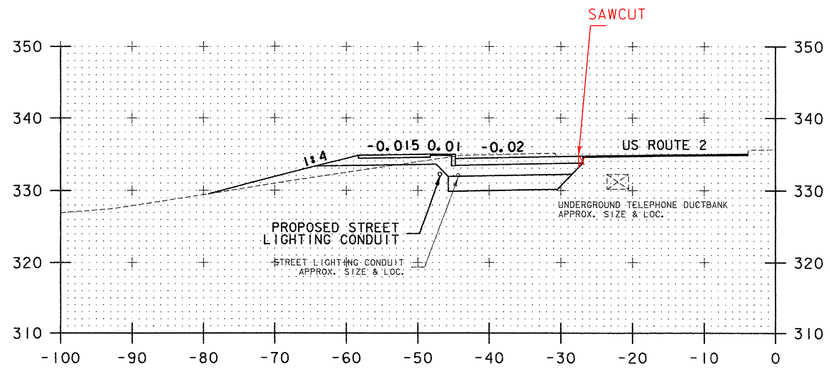

23+50

0 10 20
SCALE IN FEET

DATUM

VERTICAL NAVD 88
HORIZONTAL NAD 83 (1996)

STA. 23+50 TO STA. 24+50

US RTE 2 SECTIONS SHEET 2

PROJECT NAME: SOUTH BURLINGTON
PROJECT NUMBER: IM 089-3(37)

FILE NAME: z03al78xs.dgn
PROJECT LEADER: KEN UPMAL
DESIGNED BY: E. ATKINS
PLOT DATE: 5/5/2006
DRAWN BY: E. ATKINS
CHECKED BY: K. ISHIKURA
SHEET 96 OF 99

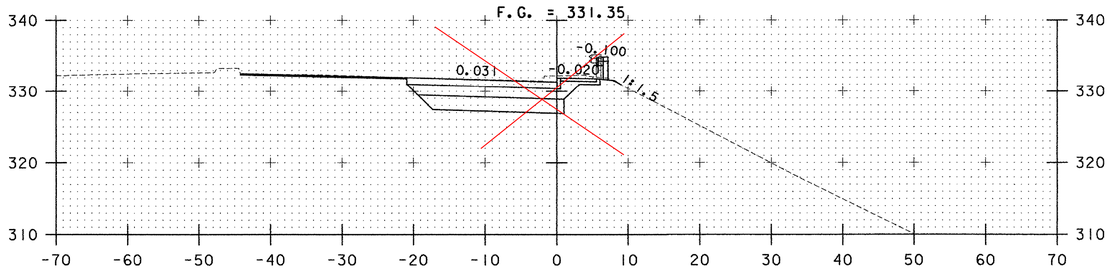

71+50

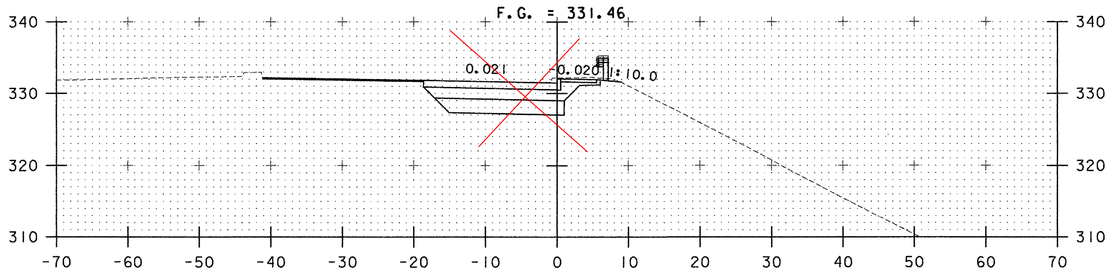

71+15.83
PC

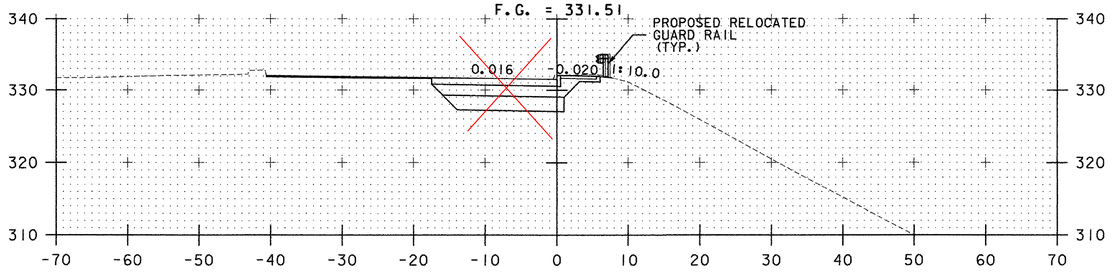

71+00

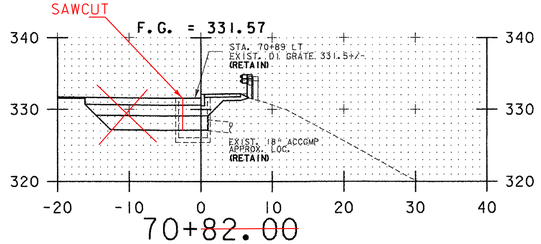

70+82.00
BEGIN PROJECT

NOTE: REFER TO RAMP "D" TRAFFIC MANAGEMENT PLANS FOR TEMPORARY WIDENING WORK.

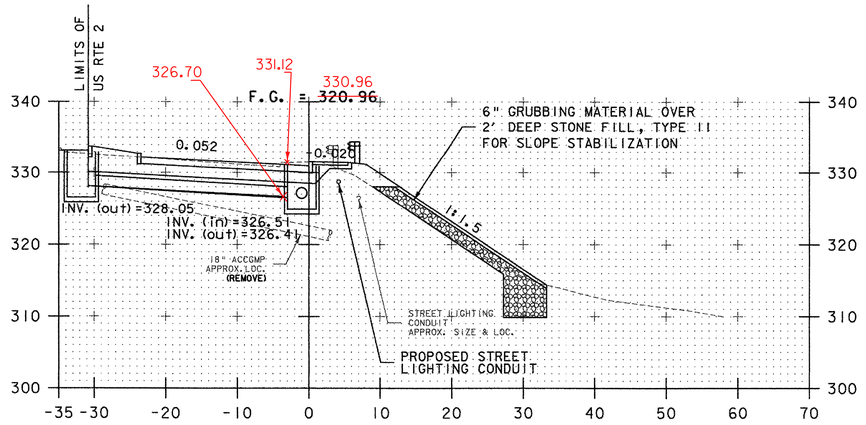

72+63.50
D1

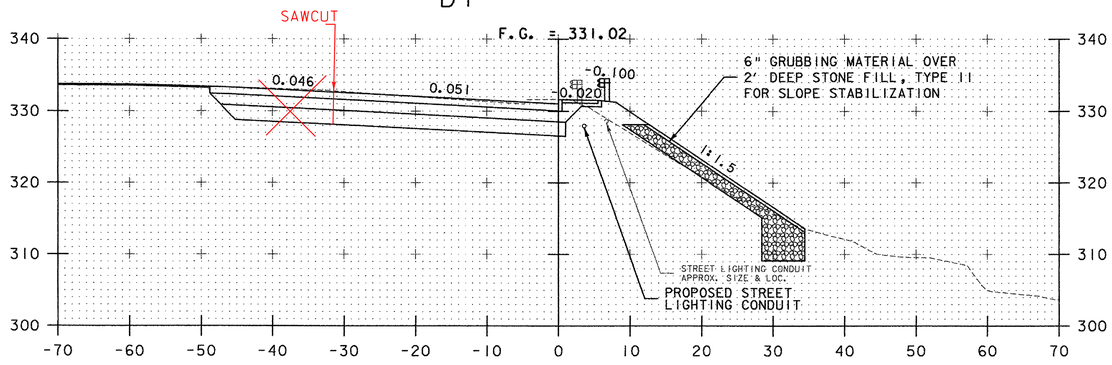

72+50

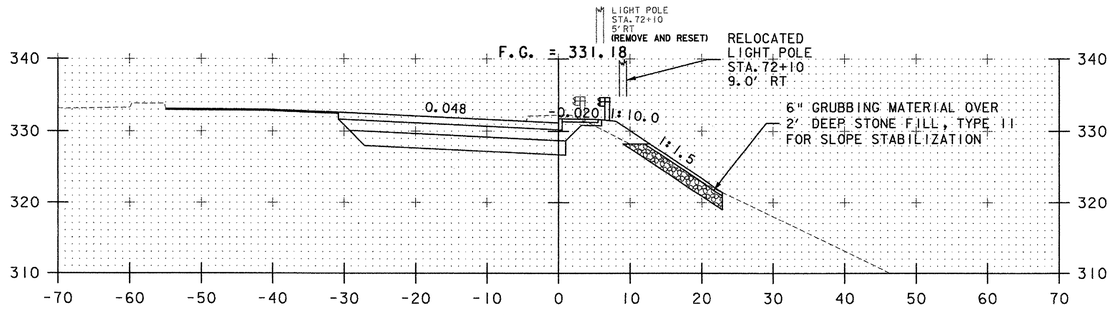

72+00

0 10 20
SCALE IN FEET

STA. 70+82 TO STA. 72+63.50

RAMP "D" SECTIONS SHEET 1

PROJECT NAME:	SOUTH BURLINGTON
PROJECT NUMBER:	IM 089-3(37)
FILE NAME: z03al78xs.dgn	PLOT DATE: 5/5/2006
PROJECT LEADER: KEN UPMAL	DRAWN BY: E. ATKINS
DESIGNED BY: E. ATKINS	CHECKED BY: K. ISHIKURA
	SHEET 97 OF 99

DATUM

VERTICAL NAVD 88

HORIZONTAL NAD 83 (1996)

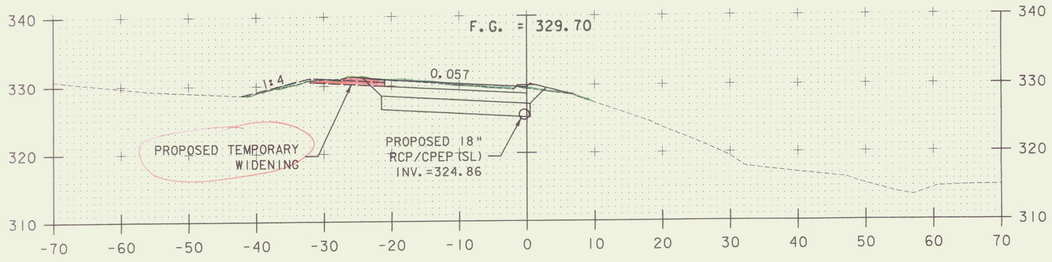

73+50

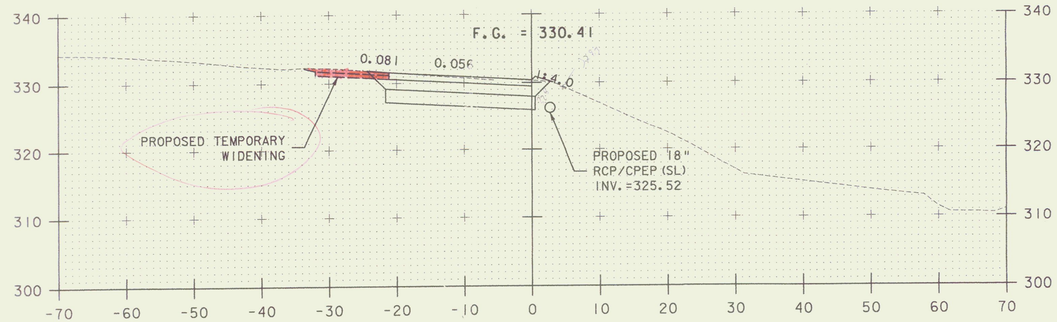

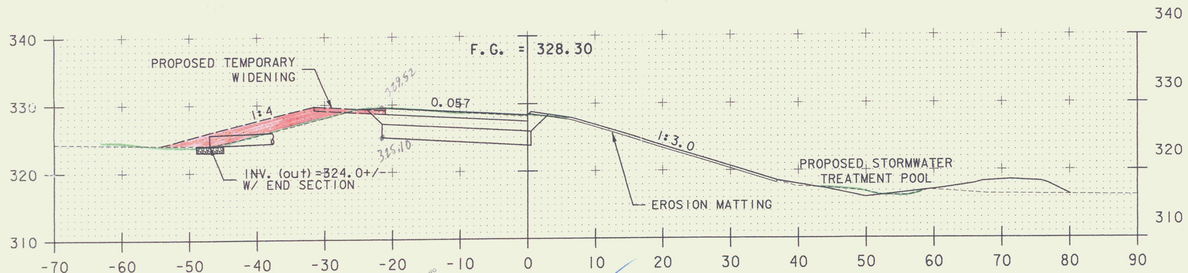

74+00 ✓
END PROJECT
BEGIN APPROACH

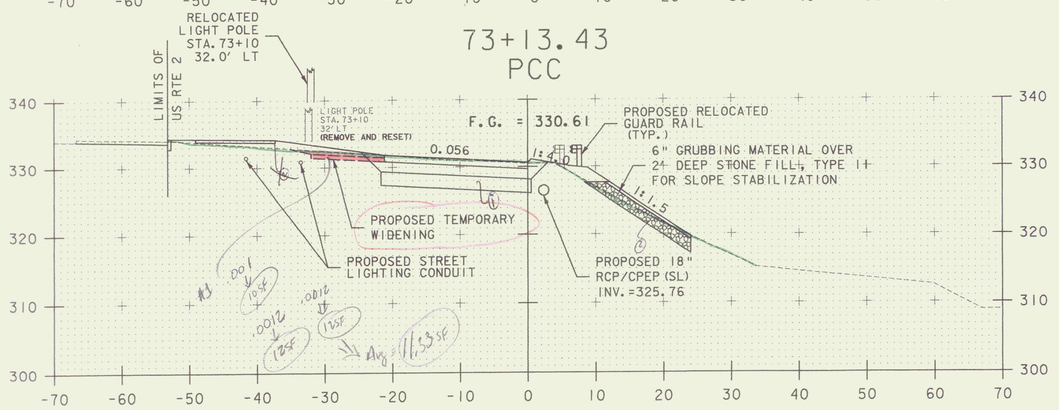

73+13.43
PCC

73+00 ✓

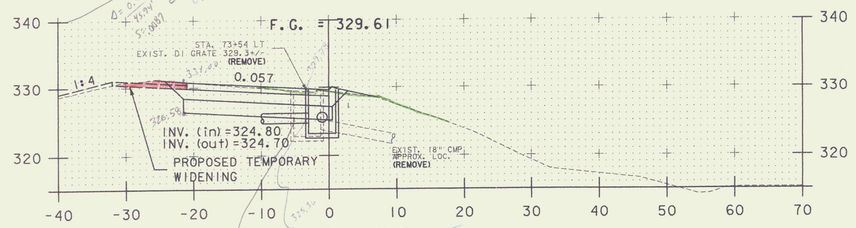

73+54.06 ✓
DI

0 10 20
SCALE IN FEET

DATUM
VERTICAL NAVD 88
HORIZONTAL NAD 83 (1996)

NOTE: REFER TO RAMP "D" TRAFFIC MANAGEMENT PLANS FOR TEMPORARY WIDENING WORK.

STA. 73+00 TO STA. 74+00

RAMP "D" SECTIONS SHEET 2

PROJECT NAME: SOUTH BURLINGTON
PROJECT NUMBER: IM 089-3(37)

FILE NAME: z03al78xs.dgn
PROJECT LEADER: KEN UPMAL
DESIGNED BY: E. ATKINS
PLOT DATE: 5/5/2006
DRAWN BY: E. ATKINS
CHECKED BY: K. ISHIKURA
SHEET 98 OF 99

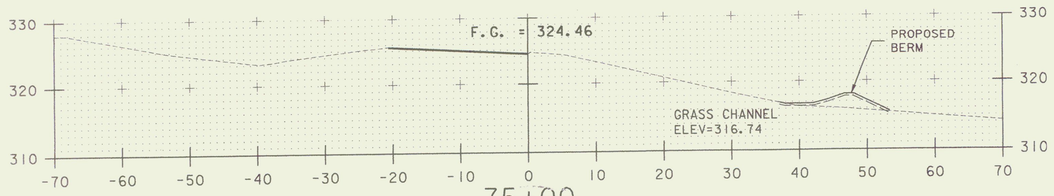

75+00
END APPROACH
MATCH EXISTING BCP

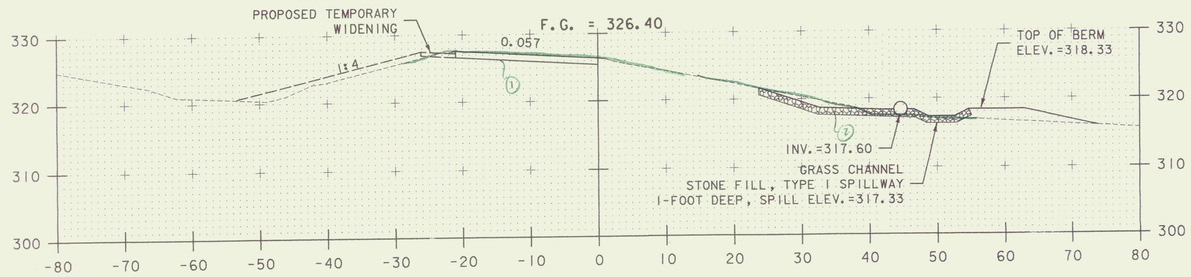

74+50

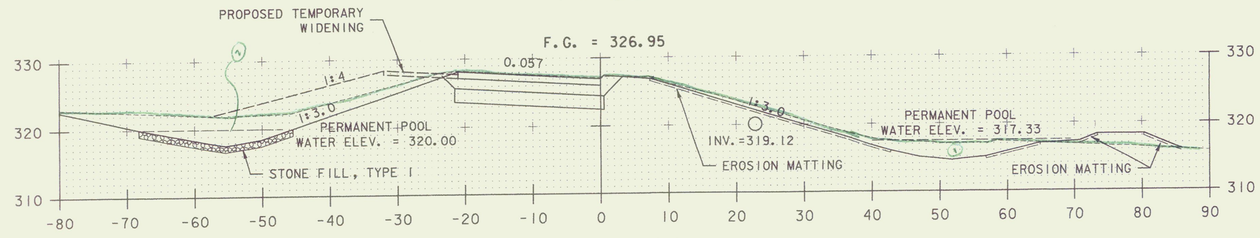

74+31.88
PCC

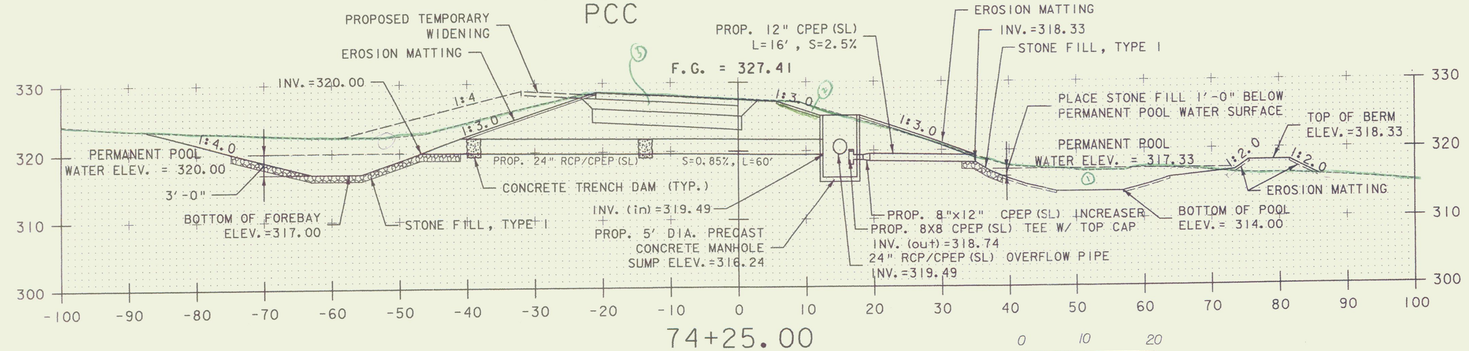

74+25.00
STP

0 10 20
SCALE IN FEET

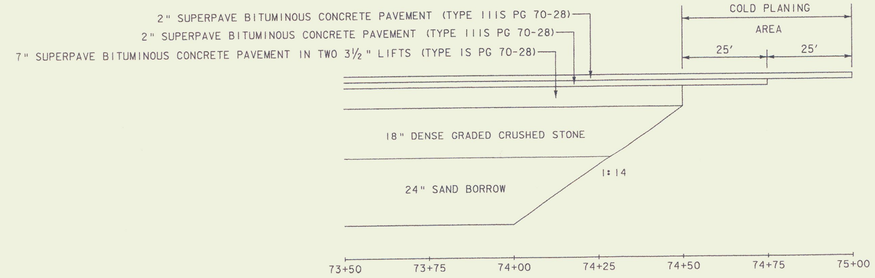

MATERIAL TRANSITION DETAIL
NOT TO SCALE

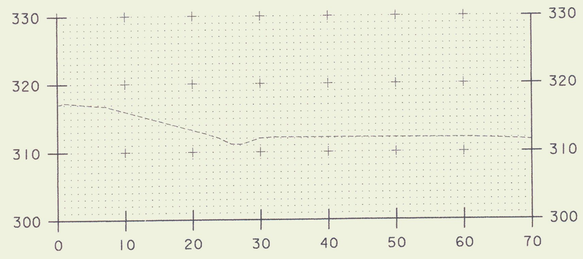

76+50

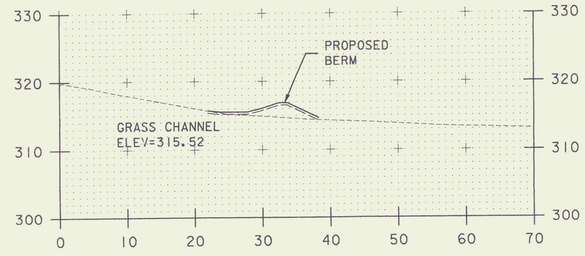

76+00

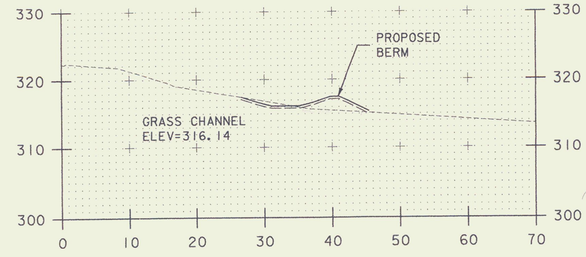

75+50

DATUM
VERTICAL NAVD 88
HORIZONTAL NAD 83 (1996)

STA. 74+25 TO STA. 76+50

RAMP "D" SECTIONS SHEET 3

PROJECT NAME: SOUTH BURLINGTON
PROJECT NUMBER: IM 089-3(37)

FILE NAME: z03dl78xs.dgn
PROJECT LEADER: KEN UPMAL
DESIGNED BY: E. ATKINS
PLOT DATE: 5/5/2006
DRAWN BY: E. ATKINS
CHECKED BY: K. ISHIKURA
SHEET 99 OF 99

GREEN INTERNATIONAL AFFILIATES, INC.
407R MYSTIC AVENUE, UNIT 25, MEDFORD, MA 02155
(781) 391-5757 FAX (781) 391-8889

RECEIVED
AUG 07 2006
DESIGN

August 3, 2006

Mr. Ken Upmal, P.E.
Roadway Design Project Manager
Vermont Agency of Transportation
National Life Building Drawer 33
Montpelier, VT 05633-5001

Subject: **South Burlington**
IM 089-3(37)
Contract No. 0284598

Dear Ken:

As requested, we have revisited the design features for the overhead sign supports and found that they are adequate for their intended use. In addition, we contacted a couple expansion bolt manufacturers and verified that the embedment proposed is indeed sufficient.

We have reviewed the enclosed shop drawings and find no exceptions. Please note however, that these plans are for the manufacture of the structural steel components only and that we would still need to review the contractor's proposed expansion bolt system and installation procedure. Additionally, although not included in the specifications, we request that a pull test be performed to verify the expansion anchor's adequacy in the existing concrete.

Should you have any questions or need any additional information, please feel free to contact me.

Very Truly Yours,
Green International Affiliates, Inc.

Ko Ishikura, P.E.
President

MAC/sase

F:\PROJECTS\2442\2442.004\CORRESPONDANCE\OUT\VTRANS\20060803\PATCHENROADSHOPDWG.DOC

F.R. Lafayette

F.R. Lafayette
52 Kellogg Road
Essex Jct
VT 05452

Phone: 802-878-5341
FAX: 802-878-2041
email: plafayette@frlafayette.com

7/25/2006

Vtrans
Attn: Structures

RE: So Burlington IM 089-3(37)

Gentlemen:

Enclosed please find shop drawings and welding procedures for bridge mounted sign support brackets for the above noted project. Please return approved drawings to us as soon as convenient.

Very truly yours,

Pamela A. Lafayette
President

RECEIVED STR-7
CK'D BY _____ CK'D BY _____
JUL 26 2006
RESUBMIT _____ APPROVED _____
BY DATE

Highway Safety Corporation

Glastonbury, CT

Welding Procedure Specification

Material specification: **A36, A709 GR 36**

Welding process: **Gas Metal Arc Welding (GMAW)**

Manual, semi-automatic, or automatic: **Semi-Automatic**

Position of welding: **Flat (1F) or Horizontal (2F)**

Filler metal specification: **AWS A5.18**

Filler metal classification: **ER70S-3**

Electrode and manufacturer: **Lincoln Electric Lincoln Weld L-50**

Flux and manufacturer: **N/A**

Shielding gas: **85% Argon / 15% CO2** Flow rate: **19-27 L / min**

Single or multiple pass: **Single**

Single or multiple arc: **Single**

Welding current: **DCEP**

Polarity: **Reverse - electrode positive**

Welding progression: **Stringers**

Root treatment: **None**

Preheat and interpass temperature: **base metal up to 3/4" (50ºF)**

Postheat treatment: **None**

Electrode extension: **3/4" ± 1/4"**

RECEIVED STR-7

CK'D BY _____ OK'D BY _____

JUL 2 6 2006

RESUBMIT _____ APPROVED _____

BY DATE

WELDING PROCEDURE

Weld size	Pass no.	Electrode size	Welding parameters: Amperes	Welding parameters: Volts	Travel speed	Joint detail
1/4"	1	.062"	350 A ± 30	28 V ± 2	12 ipm ± 2	TYPICAL ALL FILLET WELDS 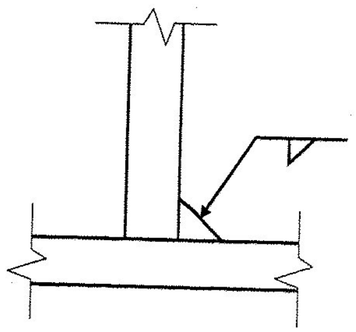

This procedure may vary due to fabrication sequence, fit-up, pass size, etc. within the limitation of variables given in section 5 of latest edition AWS D1.5

WPS no. **W-1561A**

Revision no. **0**

Supporting PQR no. **pre-qualified**

Project Name **SOUTH BURLINGTON, VT**

Fabricator **Highway Safety Corporation**

Authorized by **Paul Radice**

Date **7/13/06**

Project Number **IM 089-3 (37)**

AWS QC 1 PAUL A. RADICE 98070221 CWI

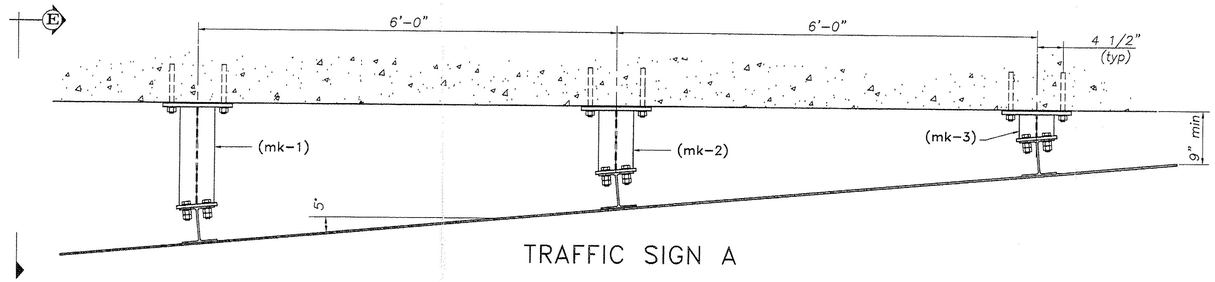

TRAFFIC SIGN A

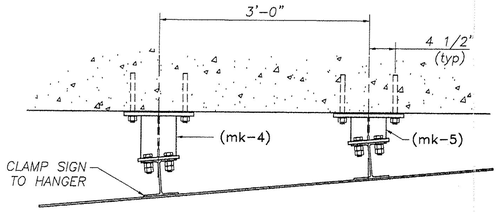

TRAFFIC SIGN B

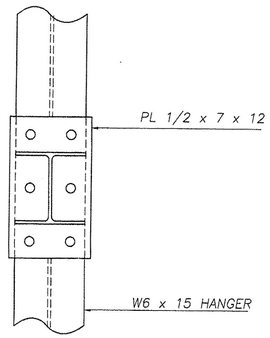

SECTION B

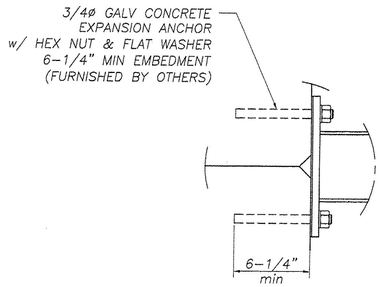

DETAIL 2

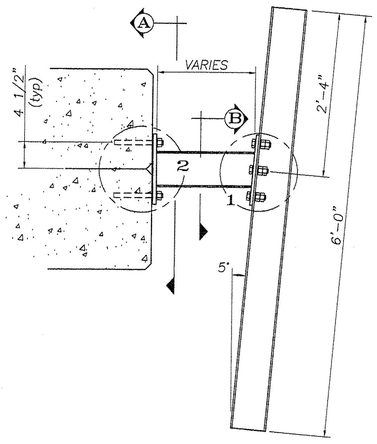

SECTION E

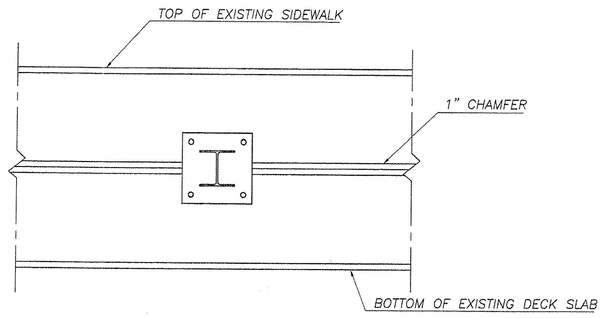

SECTION A

CENTER BRACKET PLATE ON CHAMFER
BETWEEN SIDEWALK & DECK SLAB

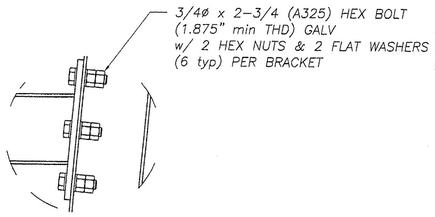

DETAIL 1

NOTES:

1.) ALL HOLES FOR 3/4" DIA STRUCTURAL BOLTS SHALL BE 13/16" DIA

2.) CONCRETE EXPANSION ANCHOR STUDS SHALL BE 3/4" DIA (GALV) AND SHALL PROVIDE A MINIMUM ALLOWABLE TENSILE CAPACITY OF 2.5 KIPS AND A MINIMUM ALLOWABLE SHEAR CAPACITY OF 1 KIP. CONCRETE EXPANSION ANCHORS SHALL MEET THE MATERIAL REQUIREMENTS OF ASTM A193.

3.) EMBEDMENT FOR THE 3/4" DIA EXPANSION ANCHORS SHALL BE AS SPECIFIED BY MANUFACTURER BUT NOT LESS THAN 6-1/2".

4.) SIGN BRACKET SHALL BE LOCATED SUCH THAT DRILLING FOR CONCRETE EXPANSION ANCHORS AVOIDS EXISTING REINFORCING STEEL IN SIDEWALK AND DECK.

5.) ALL STEEL SHALL BE GALVANIZED AFTER FABRICATION PER ASTM A123

6.) PRIOR TO GALVANIZING GRIND ALL EDGED OF SHAPES AND PLATES TO MINIMUM 1/16" RADIUS.

BILL OF MATERIAL

Mk.	Qty.	Description	Material
	5	W6 x 15 HANGER BEAM 6'-0" LONG	A36
mk-1	1	HANGER BRACKET 1	
	1	W6 x 15 BEAM x 1'-4 3/4" LONG	A36
	1	PLATE 5/8 x 12 x 12 (DETAIL P2)	A36
	1	PLATE 1/2 x 7 x 12 (DETAIL P1)	A36
mk-2	1	HANGER BRACKET 2	
	1	W6 x 15 BEAM x 10 3/8" LONG	A36
	1	PLATE 5/8 x 12 x 12 (DETAIL P2)	A36
	1	PLATE 1/2 x 7 x 12 (DETAIL P1)	A36
mk-3	1	HANGER BRACKET 3	
	1	W6 x 15 BEAM x 4 1/8" LONG	A36
	1	PLATE 5/8 x 12 x 12 (DETAIL P2)	A36
	1	PLATE 1/2 x 7 x 12 (DETAIL P1)	A36
mk-4	1	HANGER BRACKET 4	
	1	W6 x 15 BEAM x 7 1/4" LONG	A36
	1	PLATE 5/8 x 12 x 12 (DETAIL P2)	A36
	1	PLATE 1/2 x 7 x 12 (DETAIL P1)	A36
mk-5	1	HANGER BRACKET 5	
	1	W6 x 15 BEAM x 4 1/8" LONG	A36
	1	PLATE 5/8 x 12 x 12 (DETAIL P2)	A36
	1	PLATE 1/2 x 7 x 12 (DETAIL P1)	A36
	30	3/4ø x 2-3/4 HEX BOLT w/ 1.875" min thread	A325
	60	3/4ø HEAVY HEX NUT	A563 DH
	60	3/4ø SMALL ROUND FLAT WASHER	F436
	5	1/8" THICK x 12 x 12 BEARING PAD (50 DURO min)	NEOPRENE

CONCRETE EXPANSION ANCHORS FURNISHED BY OTHERS

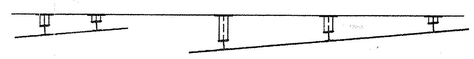

SIGN B SIGN A

I-89 S.B.

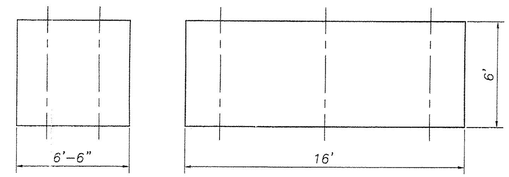

REVISIONS		
No.	Remarks	Date
0	Initial submittal	7/14/06

RECEIVED STR-7
JUL 26 2006
CK'D BY OK'D BY
RESUBMIT APPROVED
BY DATE

HIGHWAY SAFETY CORP.
GLASTONBURY, CT

BRIDGE MOUNTED TRAFFIC SIGN SUPPORT BRACKETS
PATCHEN ROAD BRIDGE
I-89 SOUTHBOUND
SOUTH BURLINGTON, VT
IM 089-3(37)

DRAWN p. radice
CHECKED
DATE 07-13-06
SCALE none
HSC REFERENCE NO. 1561
SIZE D REVISION 0
SHEET NO. 1 of 2

GENERAL CONTRACTOR
SUB CONTRACTOR F.R. LAFAYETTE

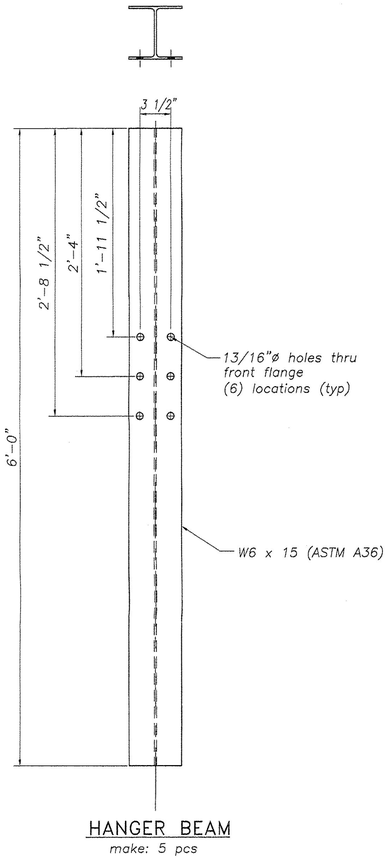

HANGER BEAM
make: 5 pcs

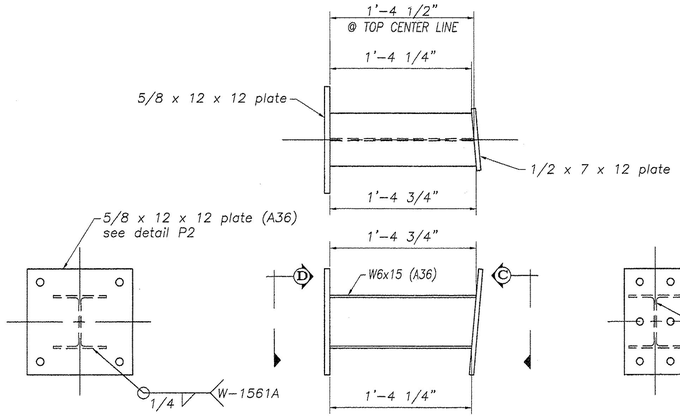

END VIEW D
typ all brackets

HANGER BRACKET (mk-1)
make: 1 pc

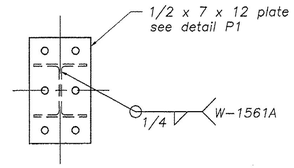

END VIEW C
typ all brackets

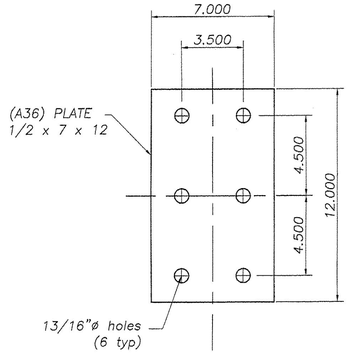

DETAIL P1
make: 5 pcs
weld to bracket

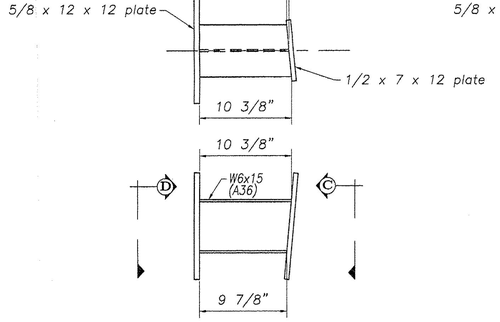

HANGER BRACKET (mk-2)
make: 1 pc

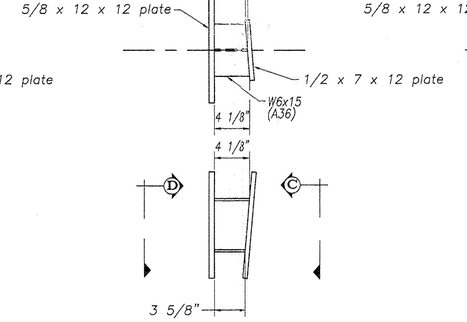

HANGER BRACKET (mk-3)
make: 1 pc

HANGER BRACKET (mk-5)
make: 1 pc

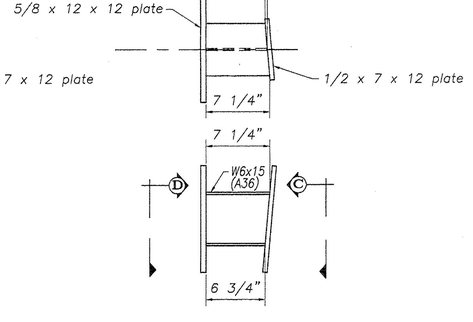

HANGER BRACKET (mk-4)
make: 1 pc

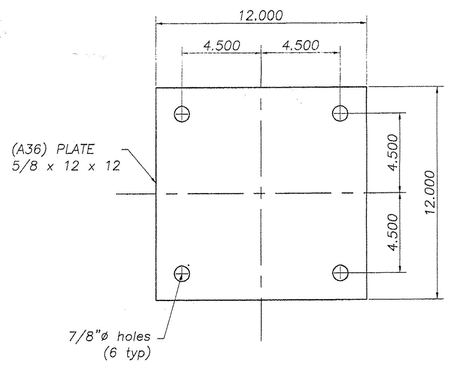

DETAIL P2
make: 5 pcs
weld to bracket

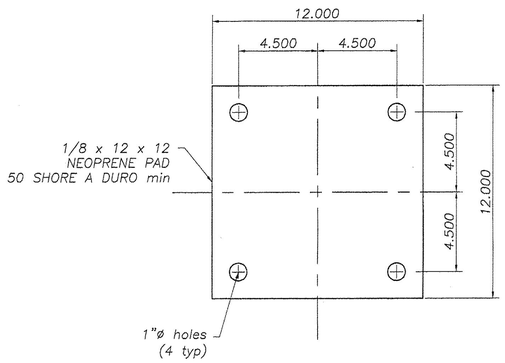

BEARING PAD
make: 5 pcs

RECEIVED STR-7
CK'D BY_____ CK'D BY_____
JUL 26 2006
RESUBMIT_____ APPROVED_____
BY DATE

REVISIONS		
No.	Remarks	Date
0	Initial submittal	7/14/06

HIGHWAY SAFETY CORP.
GLASTONBURY, CT

BRIDGE MOUNTED TRAFFIC SIGN SUPPORT BRACKETS
PATCHEN ROAD BRIDGE
I-89 SOUTHBOUND
SOUTH BURLINGTON, VT
IM 089-3(37)

GENERAL CONTRACTOR

SUB CONTRACTOR F.R. LAFAYETTE

DRAWN p. radice
CHECKED
DATE 07-13-06
SCALE none
HSC REFERENCE NO. 1561
SIZE D REVISION 0
SHEET NO. 2 of 2

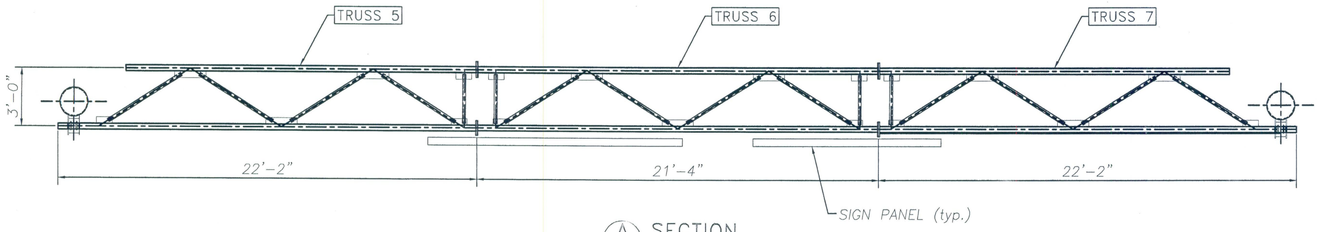

A SECTION

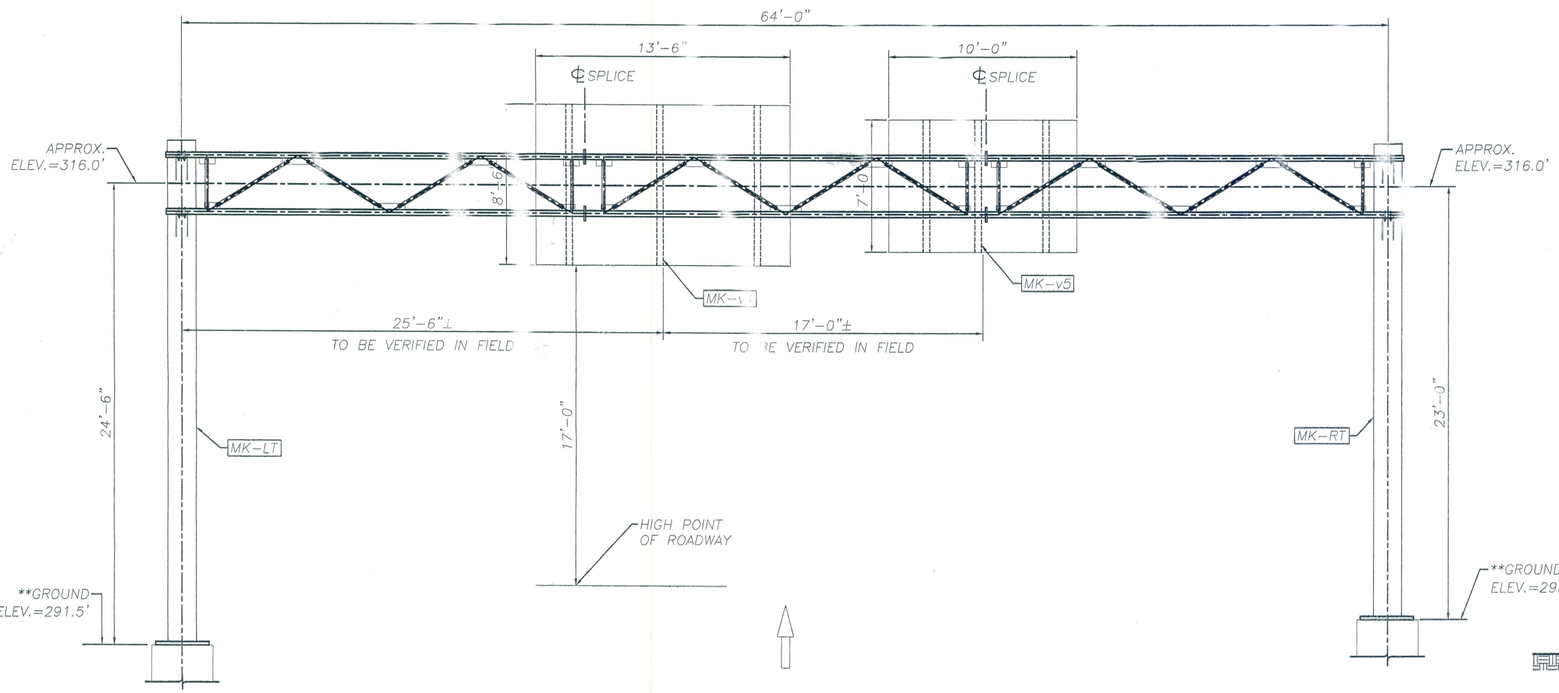

ELEVATION

OVERHEAD TRAFFIC SIGN SUPPORT STA. 52+00

LOOKING AT FACE OF SIGN

(OUT OF PLANE CHORDS NOT SHOWN FOR CLARITY)

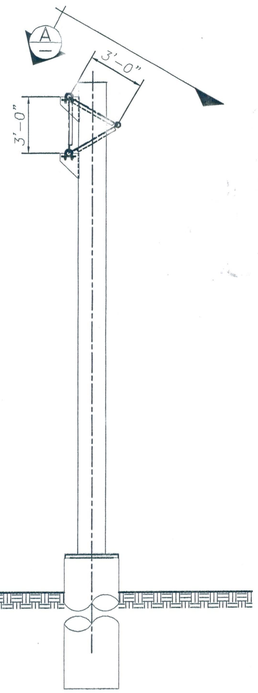

SIDE VIEW

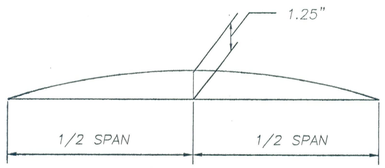

CAMBER DIAGRAM

NOTE:

CAMBER WILL BE ACHIEVED BY SHORTENING LOWER CHORD PIPES BY AN AMOUNT SUCH THAT POSITIVE UPWARD DEFLECTION IS PRODUCED WHEN TRUSSES ARE BROUGHT TOGETHER AT SPLICES.

NOTE:

1. STRUCTURE DESIGNED IN ACCORDANCE WITH LATEST EDITION AASHTO STANDARD SPECIFICATIONS FOR STRUCTURAL SUPPORTS FOR HIGHWAY SIGNS, LUMINARIES AND TRAFFIC SIGNALS.

2. ALL HOLES FOR HIGH STRENGTH FASTENERS SHALL BE DRILLED OR SUB-PUNCHED FULL SIZE. SLOTTED HOLES AND/OR VENT OR ACCESS HOLES MAY BE CUT WITH MECHANICALLY GUIDED PLASMA OR FLAME TORCH.

3. GRIND SHARP CORNERS OF ALL PLATES TO A $\frac{1}{16}$" MIN. RADIUS PRIOR TO GALVANIZING.

4. ALL WELDING SHALL BE PERFORMED BY QUALIFIED WELDERS IN ACCORDANCE WITH AWS D1.1.

5. ALL STEEL PLATES FOR STRUCTURAL COMPONENTS SHALL BE ASTM A709 GR. 50.

6. STEEL PLATES AND SHAPES FOR NON-STRUCTURAL COMPONENTS SHALL BE ASTM A709 GR. 36.

7. STEEL PIPES FOR STRUCTURAL MEMBERS SHALL HAVE MINIMUM YIELD OF 42 ksi AND SHALL CONFORM TO ONE OF THE FOLLOWING GRADES: ASTM A500 GR. B, ~~OR API 5L/X.~~

8. UNLESS OTHERWISE NOTED, ALL BOLTS FOR STRUCTURAL CONNECTIONS SHALL BE M164 TYPE 1 (A325).

9. GALVANIZED U-BOLTS FOR CONNECTION OF SIGN HANGER BEAMS TO TRUSS SHALL BE ASTM F-1554 GR. 36.

10. ALL STRUCTURAL STEEL SHALL BE HOT-DIPPED GALVANIZED AFTER FABRICATION IN ACCORDANCE WITH AASHTO M111 (ASTM A123).

11. ALL HARDWARE, UNLESS OTHERWISE NOTED, SHALL BE HOT-DIPPED GALVANIZED PER AASHTO M232 (ASTM A153).

12. ANCHOR HARDWARE SHALL BE STAINLESS STEEL AND MEET REQUIREMENTS OF VAOT STANDARD SPECIFICATION 714.09.

13. CONCRETE AND REBAR SHOWN IN FOOTING DESIGN TO BE FURNISHED BY OTHERS.

14. FOUNDATION DESIGN BASED ON USE OF 3000 psi MINIMUM CONCRETE.

15. SPACE BETWEEN THE TOP OF CONCRETE AND THE BOTTOM OF STEEL BASE PLATE SHALL BE FILLED WITH TYPE IV MORTAR AFTER LEVELING.

16. BOLTS INSTALLED IN STRUCTURAL CONNECTIONS SHALL BE PROVIDED AND TENSIONED PER APPLICABLE PROVISIONS OF VAOT STANDARD SECIFICATION SECTION 506.

(**) GROUND ELEVATION IS PROVIDED IN CONTRACT DRAWINGS, TOP OF CONCRETE ELEVATION TO BE VERIFIED AND ADJUST POST HEIGHTS AS NEEDED PRIOR TO FABRICATION TO MAINTAIN MINIMUM SIGN CLEARANCE.

RECEIVED
CK'D BY_____ CK'D BY_____
SEP 05 2006
RESUBMIT_____ APPROVED_____
BY_____ DATE 9/6/06

REVISIONS		
No.	Remarks	Date
0	Initial submittal	

HIGHWAY SAFETY CORP.
GLASTONBURY, CT

TRI-CHORD SIGN STRUCTURE
I-89 SB EXIT 14W RAMP "C"
CHITTENDEN COUNTY, VERMONT
CITY OF SOUTH BURLINGTON
PROJECT No. ACIM 089-3(37)

GENERAL CONTRACTOR
SUB CONTRACTOR F.R. LAFAYETTE

DRAWN	MHM
CHECKED	
DATE	8/29/06
SCALE	N.T.S.
HSC REFERENCE NO.	1558
SIZE D	REVISION 0
SHEET NO.	1 of 8

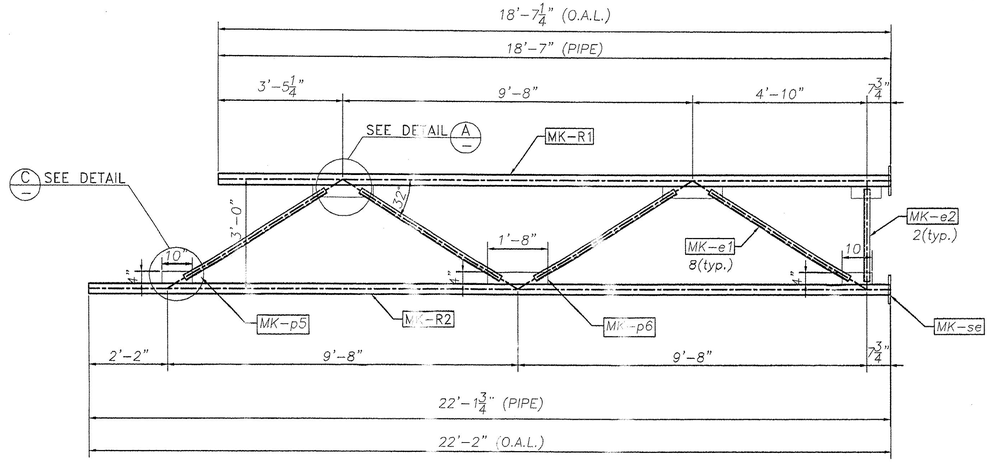

1 VIEW

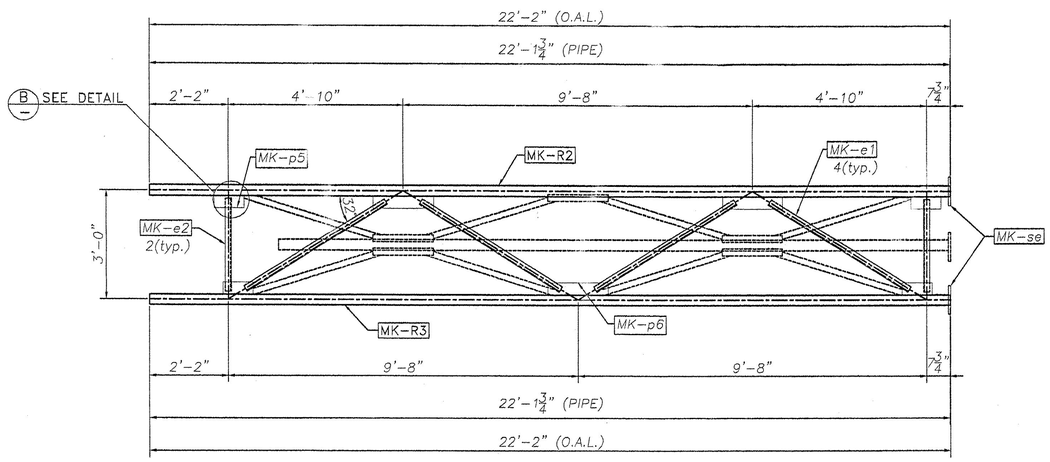

FRONT VIEW

TRUSS 5

STAMP TR5 IN ONE FLANGE

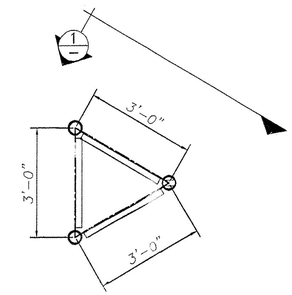

SIDE VIEW

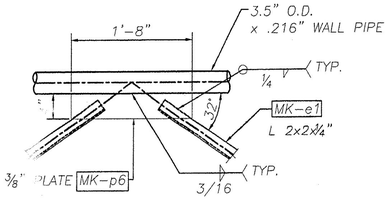

DETAIL "A"

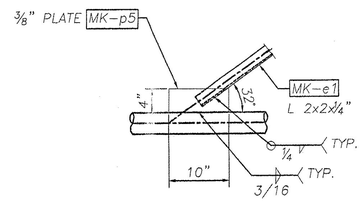

DETAIL "C"

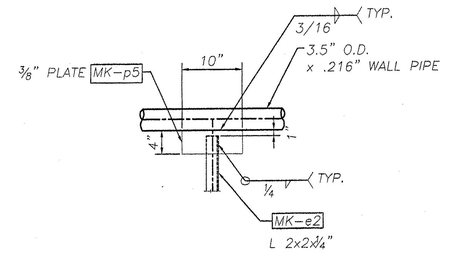

DETAIL "B"

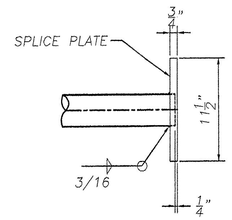

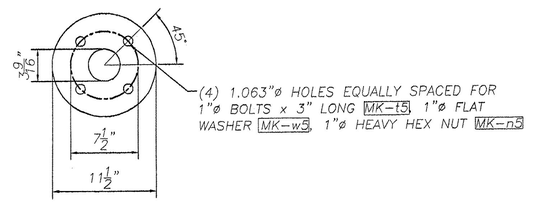

SPLICE DETAIL

MK-se

NOTES:

1. PRIOR TO GALVANIZING, ALL CORNERS AND EDGES OF STEEL PLATES, SHAPES, ETC., SHALL BE GROUND TO A 1/16 INCH RADIUS.

2. SEAL WELD ALL CONNECTIONS WHEN POSSIBLE.

RECEIVED
CK'D BY _____ CK'D BY _____
SEP 05 2006
RESUBMIT _____ APPROVED ✓
BY _____ DATE 9/5/06

REVISIONS		
No.	Remarks	Date
0	Initial submittal	

HIGHWAY SAFETY CORP.
GLASTONBURY, CT

TRI-CHORD SIGN STRUCTURE
I-89 SB EXIT 14W RAMP "C"
CHITTENDEN COUNTY, VERMONT
CITY OF SOUTH BURLINGTON
PROJECT No. ACIM 089-3(37)

GENERAL CONTRACTOR
SUB CONTRACTOR F.R. LAFEYETTE

DRAWN	MHM
CHECKED	
DATE	8/29/06
SCALE	N.T.S.
HSC REFERENCE NO.	1558
SIZE	D
REVISION	0
SHEET NO.	2 of 8

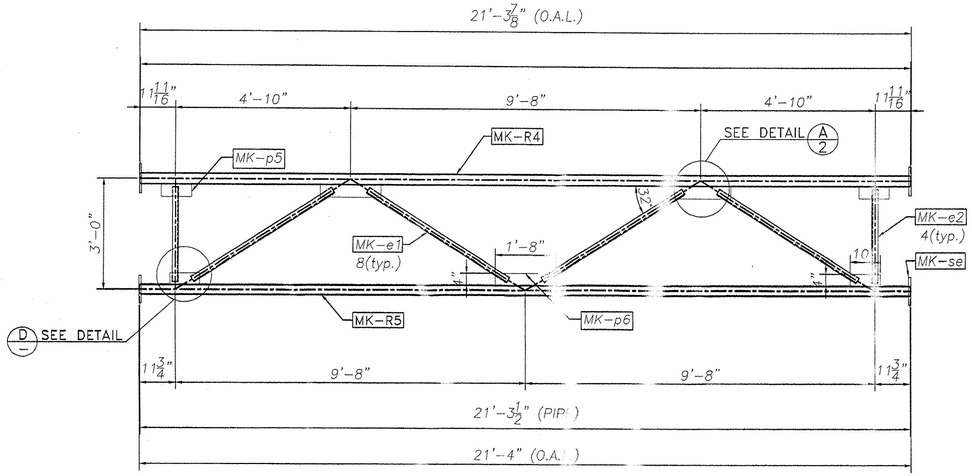

2/- VIEW

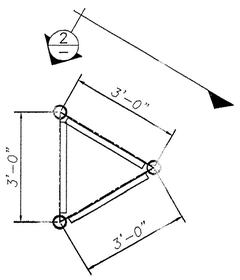

SIDE VIEW

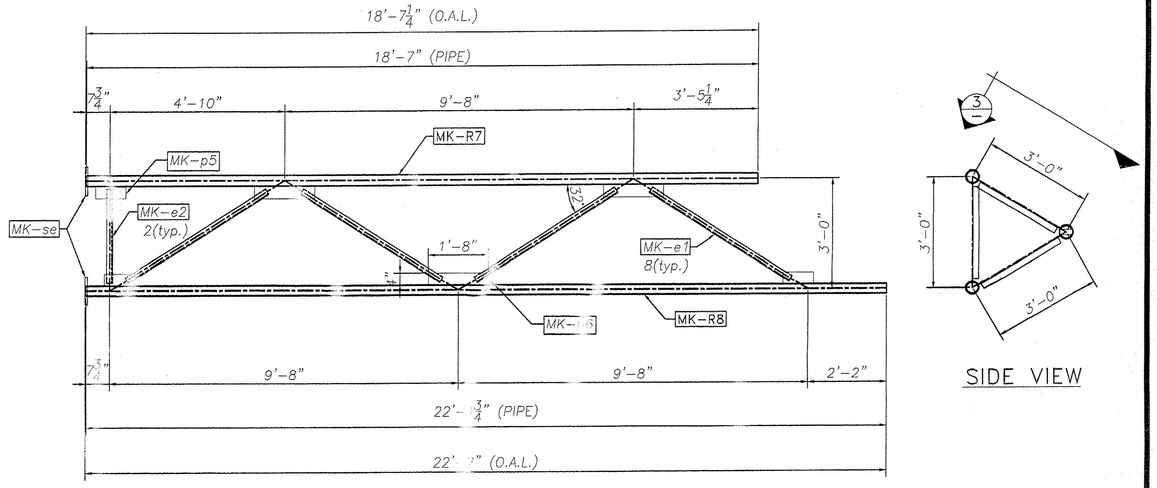

3/- VIEW

SIDE VIEW

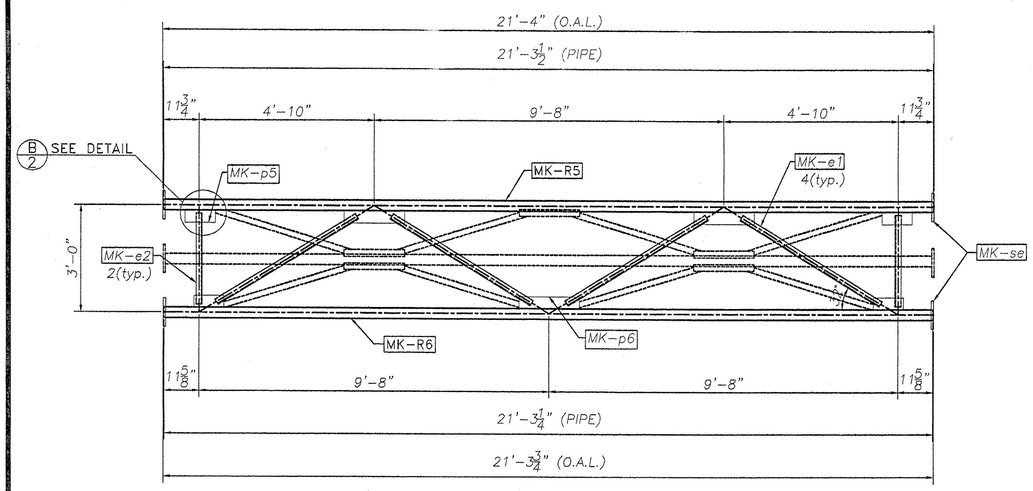

FRONT VIEW

TRUSS 6

STAMP TR6 IN ONE FLANGE

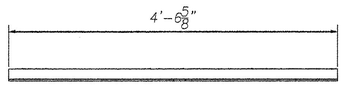

MK-e1

L2x2x.25"

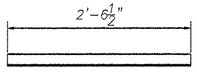

MK-e2

L2x2x.25"

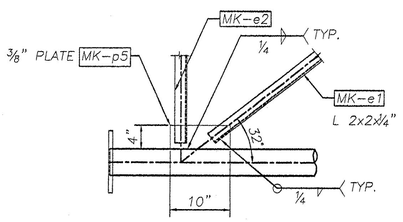

DETAIL "D"

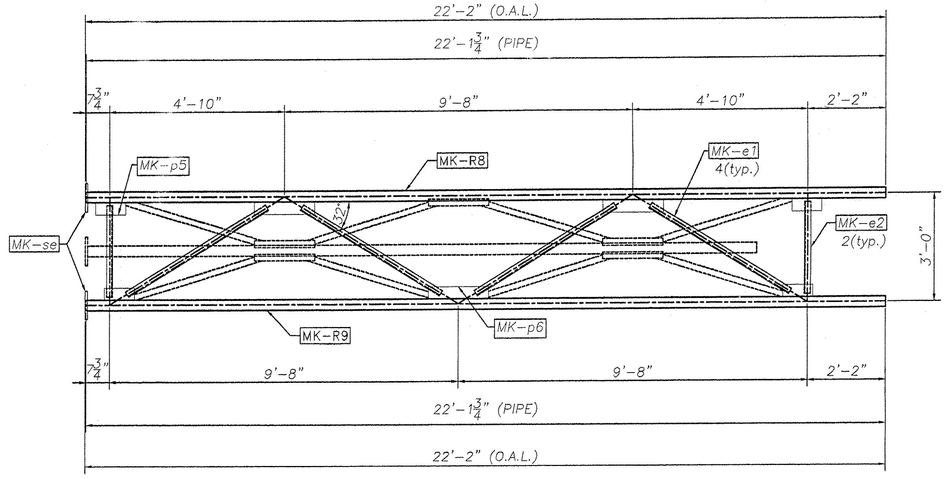

FRONT VIEW

TRUSS 7

STAMP TR7 IN ONE FLANGE

REVISIONS		
No.	Remarks	Date
0	Initial submittal	

RECEIVED
CK'D BY_____ CK'D BY_____
SEP 05 2006
RESUBMIT_____ APPROVED_____
BY WH 4/ DATE 9/6/06

HIGHWAY SAFETY CORP.
GLASTONBURY, CT

TRI-CHORD SIGN STRUCTURE
I-89 SB EXIT 14W RAMP "C"
CHITTENDEN COUNTY, VERMONT
CITY OF SOUTH BURLINGTON
PROJECT No. ACIM 089-3(37)

GENERAL CONTRACTOR
SUB CONTRACTOR F.R. LAFEYETTE

DRAWN MHM
CHECKED
DATE 8/29/06
SCALE N.T.S.
HSC REFERENCE NO. 1558
SIZE D REVISION 0
SHEET NO. 3 of 8

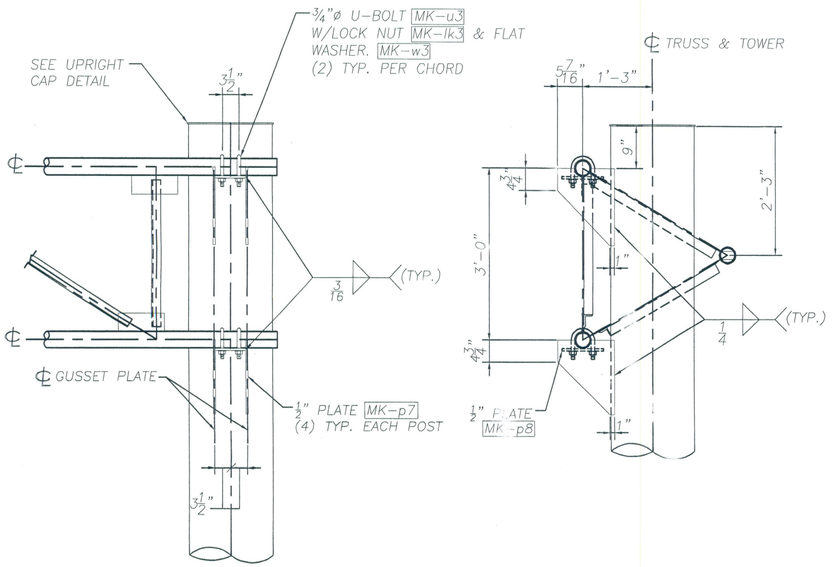

TRUSS CONNECTION DETAIL

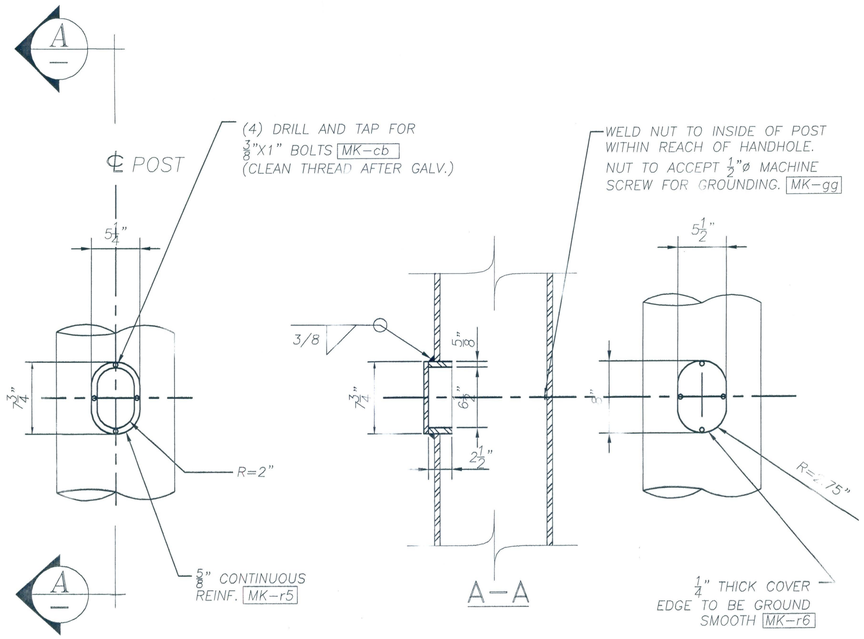

POST HANDHOLE DETAIL

PLACE ON SIDE OF POLE AWAY FROM APPROACHING TRAFFIC

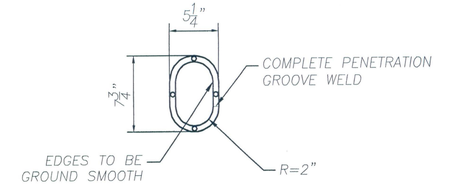

HANDHOLE REINF.

MK-r5

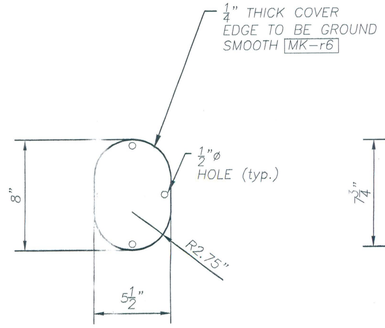

HANDHOLE COVER

MK-r6

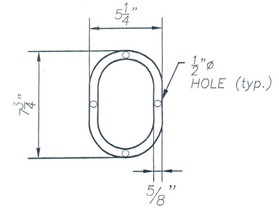

GASKET

MK-ga

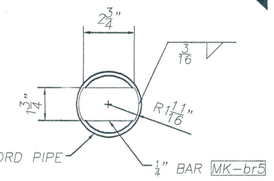

PLUG DETAIL

(EACH END OF TRUSS CHORD)

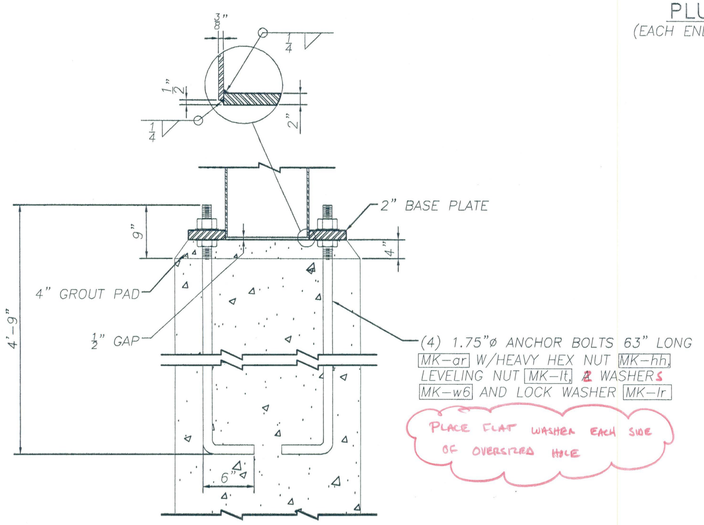

ANCHORAGE ASSEMBLY

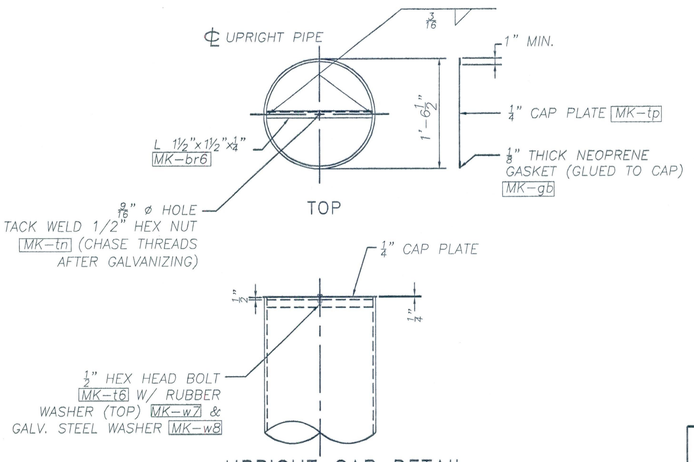

UPRIGHT CAP DETAIL

ASSEMBLE CAP TO POST PRIOR TO SHIPPING.

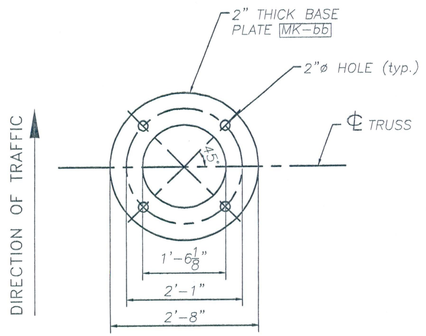

BASE PLATE DETAIL

MK-bb

RECEIVED
CK'D BY _____ OK'D BY _____
SEP 05 2006
RESUBMIT _____ APPROVED As Noted
BY WY DATE 9/6/06

REVISIONS		
No.	Remarks	Date
0	initial submittal	

HIGHWAY SAFETY CORP.
GLASTONBURY, CT

TRI-CHORD SIGN STRUCTURE
I-89 SB EXIT 14W RAMP "C"
CHITTENDEN COUNTY, VERMONT
CITY OF SOUTH BURLINGTON
PROJECT No. ACIM 089-3(37)

DRAWN	MHM
CHECKED	
DATE	8/29/06
SCALE	N.T.S.
HSC REFERENCE NO.	1558
SIZE	D
REVISION	0
SHEET NO.	4 of 8

GENERAL CONTRACTOR
SUB CONTRACTOR F.R. LAFEYETTE

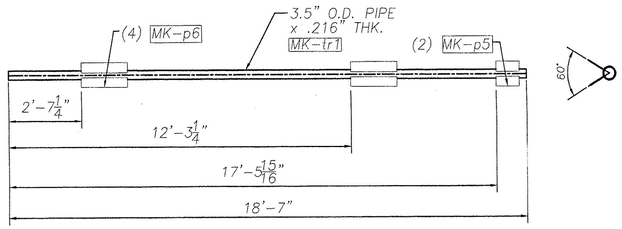

MK-R1

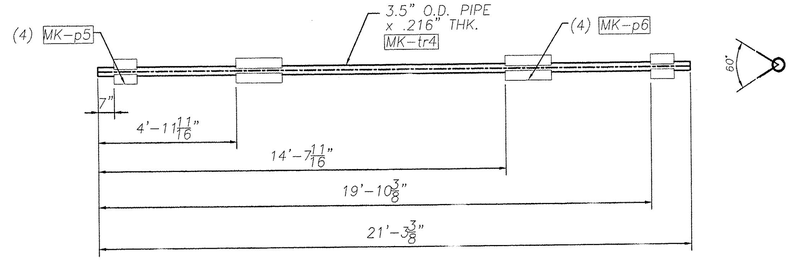

MK-R4

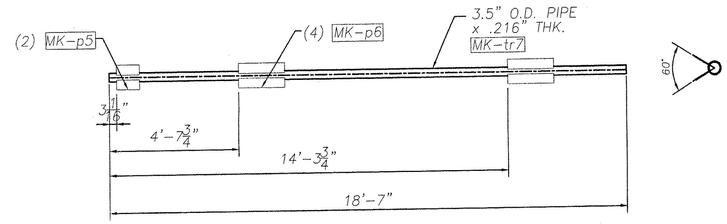

MK-R7

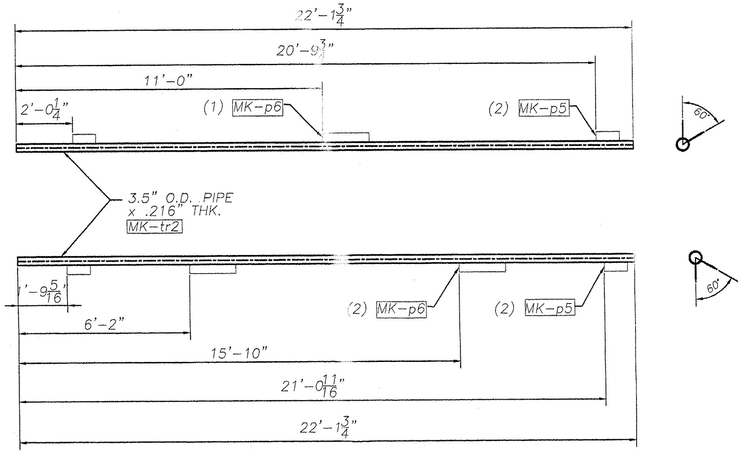

MK-R2

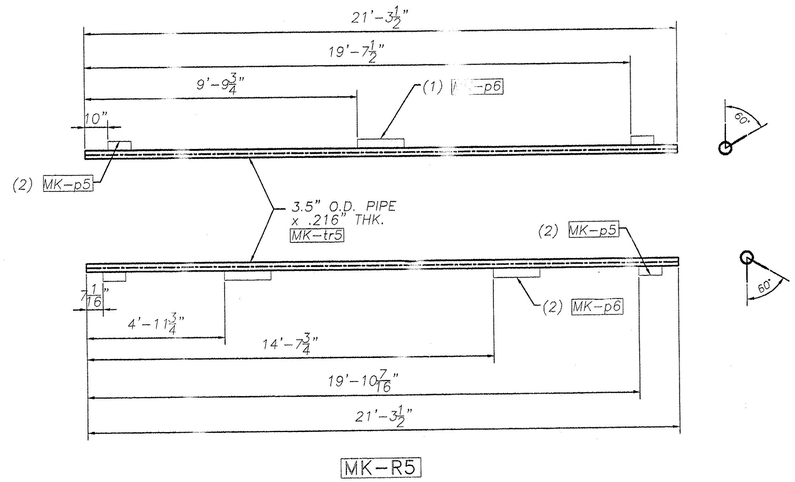

MK-R5

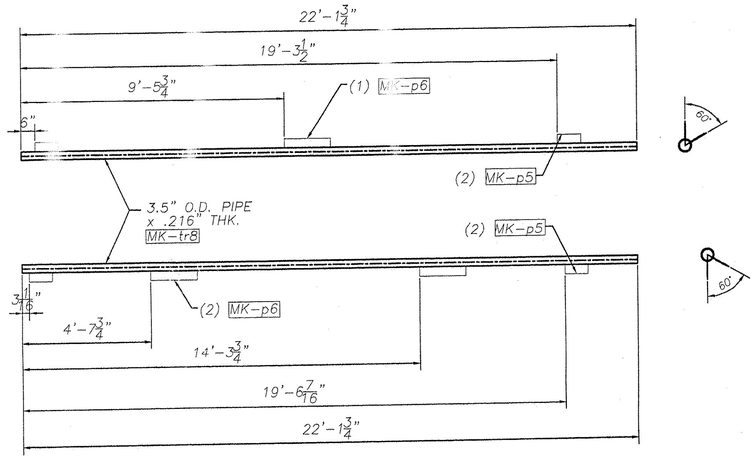

MK-R8

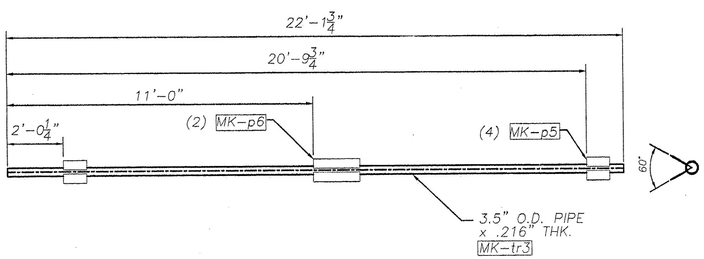

MK-R3

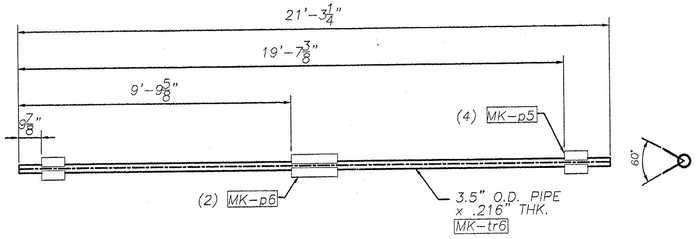

MK-R6

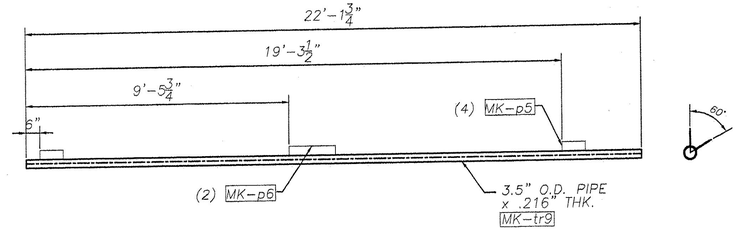

MK-R9

TRUSS 5

TRUSS 6

TRUSS 7

RECEIVED
CK'D BY _____ CK'D BY _____
SEP 05 2006
RESUBMIT _____ APPROVED ✓
BY WY DATE 9/6/06

REVISIONS		
No.	Remarks	Date
0	Initial submittal	

HIGHWAY SAFETY CORP.
GLASTONBURY, CT

TRI-CHORD SIGN STRUCTURE
I-89 SB EXIT 14W RAMP "C"
CHITTENDEN COUNTY, VERMONT
CITY OF SOUTH BURLINGTON
PROJECT No. ACIM 089-3(37)

GENERAL CONTRACTOR

SUB CONTRACTOR F.R. LAFEYETTE

DRAWN	MHM
CHECKED	
DATE	8/29/06
SCALE	NTS
HSC REFERENCE NO.	1558
SIZE	D
REVISION	0
SHEET NO.	5 of 8

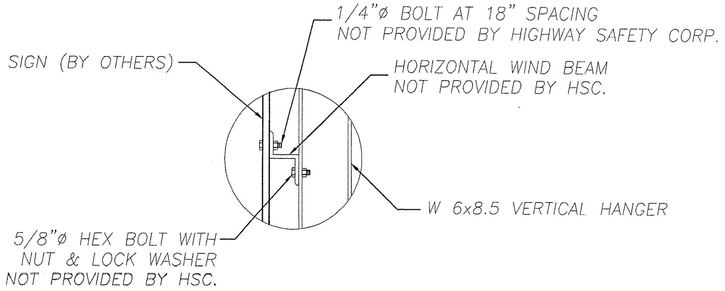

SIGN ATTACHMENT DETAIL

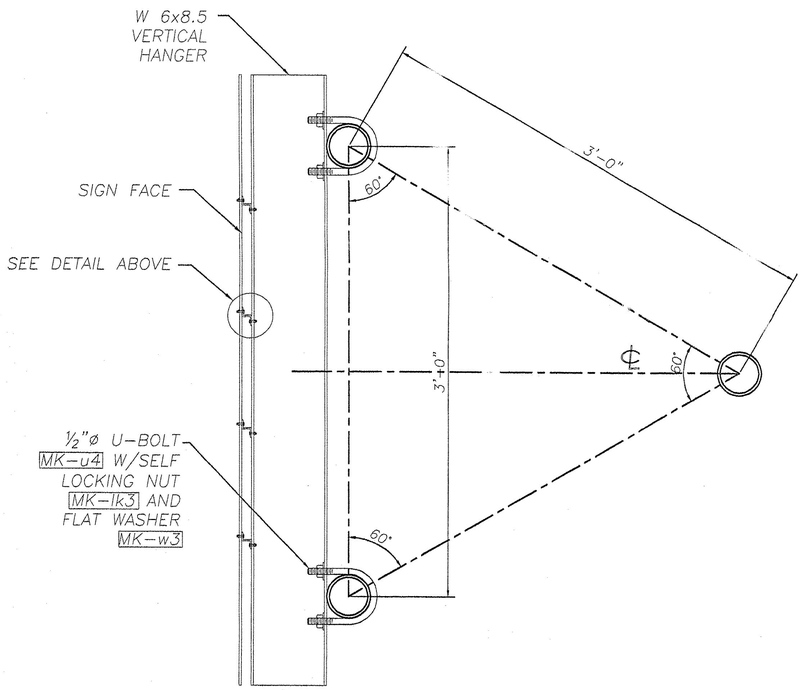

SIGN MOUNTING DETAIL

VERTICAL HANGER BEAMS & U-BOLTS INCLUDED

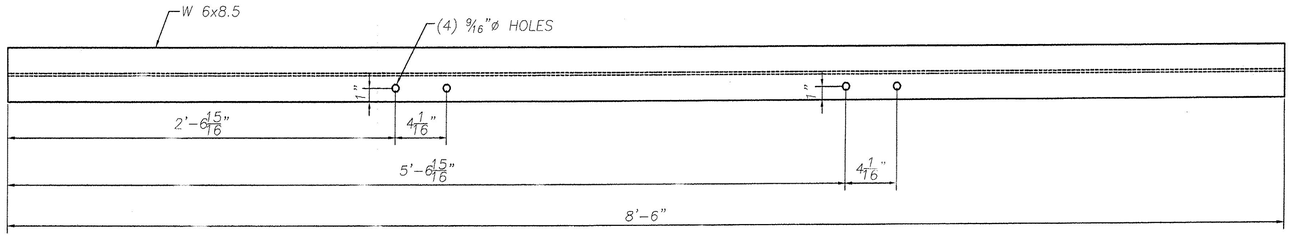

MK-v4

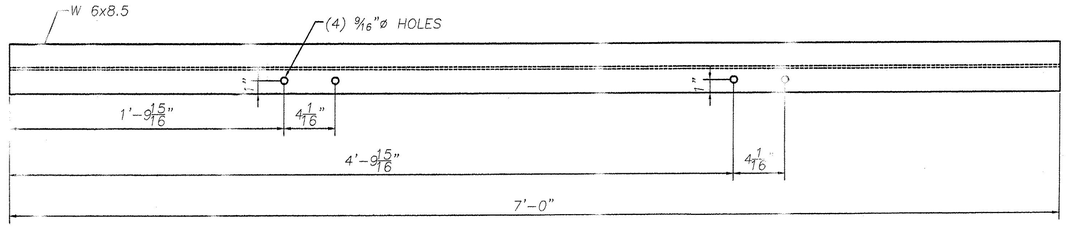

MK-v5

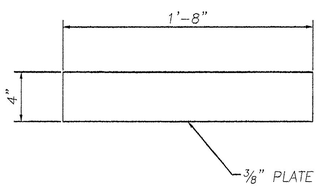

MK-p6

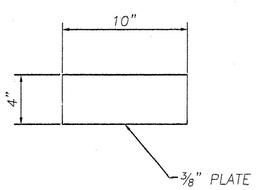

MK-p5

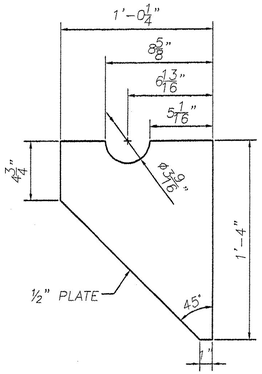

MK-p7

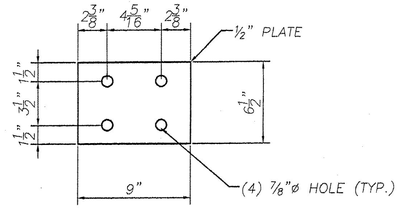

MK-p8

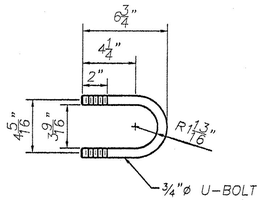

MK-u3

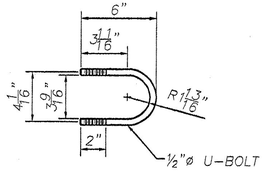

MK-u4

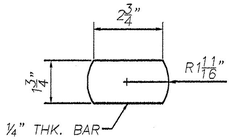

MK-br5

REVISIONS		
No.	Remarks	Date
0	Initial submittal	

RECEIVED
CK'D BY _____ CK'D BY _____
SEP 05 2006
RESUBMIT _____ APPROVED ✓
BY _____ DATE 9/6/06

HIGHWAY SAFETY CORP.

GLASTONBURY, CT

TRI-CHORD SIGN STRUCTURE
I-89 SB EXIT 14W RAMP "C"
CHITTENDEN COUNTY, VERMONT
CITY OF SOUTH BURLINGTON
PROJECT No. ACIM 089-3(37)

GENERAL CONTRACTOR

SUB CONTRACTOR F.R. LAFEYETTE

DRAWN	MHM
CHECKED	
DATE	8/29/06
SCALE	NTS
HSC REFERENCE NO.	1558
SIZE	D
REVISION	0
SHEET NO.	6 of 8

BILL OF MATERIAL

Mk.	Mk.	Qty.	Description	Length	Material
R1,R7		2	CHORD TRUSS ASSEMBLY		
	tr1,tr7	2	CHORD PIPE 3.5" O.D. x .216" THICK	18'-7"	A500 Gr. B/~~API 5L/X~~
	p5	4	TRUSS TO CHORD CONN. PLATE .375"x4"	10"	A709 Gr. 50
	p6	8	TRUSS TO CHORD CONN. PLATE .375"x4"	1'-8"	A709 Gr. 50
	se	2	0.75" THICK CHORD SPLICE PLATE	11.5" DIA.	A709 Gr. 50
	br5	2	PLUG BAR .250"x1.75"	2.75"	A709 Gr. 50
R2,R8		2	CHORD TRUSS ASSEMBLY		
	tr2,tr8	2	CHORD PIPE 3.5" O.D. x .216" THICK	22'-1.75"	A500 Gr. B/~~API 5L/X~~
	p5	8	TRUSS TO POST CONN. PLATE .375"x4"	10"	A709 Gr. 50
	p6	6	TRUSS TO POST CONN. PLATE .375"x4"	1'-8"	A709 Gr. 50
	se	2	0.75" THICK CHORD SPLICE PLATE	11.5" DIA.	A709 Gr. 50
	br5	2	PLUG BAR .250"x1.75"	2.75"	A709 Gr. 50
R3,R9		2	CHORD TRUSS ASSEMBLY		
	tr3,tr9	2	CHORD PIPE 3.5" O.D. x .216" THICK	22'-1.75"	A500 Gr. B/~~API 5L/X~~
	p5	8	TRUSS TO POST CONN. PLATE .375"x4"	10"	A709 Gr. 50
	p6	4	TRUSS TO POST CONN. PLATE .375"x4"	1'-8"	A709 Gr. 50
	se	2	0.75" THICK CHORD SPLICE PLATE	11.5" DIA.	A709 Gr. 50
	br5	2	PLUG BAR .250"x1.75"	2.75"	A709 Gr. 50
R4		1	CHORD TRUSS ASSEMBLY		
	tr4	1	CHORD PIPE 3.5" O.D. x .216" THICK	21'-3.375"	A500 Gr. B/~~API 5L/X~~
	p5	4	TRUSS TO CHORD CONN. PLATE .375"x4"	10"	A709 Gr. 50
	p6	4	TRUSS TO CHORD CONN. PLATE .375"x4"	1'-8"	A709 Gr. 50
	se	2	0.75" THICK CHORD SPLICE PLATE	11.5" DIA.	A709 Gr. 50
R5		1	CHORD TRUSS ASSEMBLY		
	tr5	1	CHORD PIPE 3.5" O.D. x .216" THICK	21'-3.50"	A500 Gr. B/~~API 5L/X~~
	p5	4	TRUSS TO POST CONN. PLATE .375"x4"	10"	A709 Gr. 50
	p6	3	TRUSS TO POST CONN. PLATE .375"x4"	1'-8"	A709 Gr. 50
	se	2	0.75" THICK CHORD SPLICE PLATE	11.5" DIA.	A709 Gr. 50
R6		1	CHORD TRUSS ASSEMBLY		
	tr6	1	CHORD PIPE 3.5" O.D. x .216" THICK	21'-3.25"	A500 Gr. B/~~API 5L/X~~
	p5	4	TRUSS TO POST CONN. PLATE .375"x4"	10"	A709 Gr. 50
	p6	2	TRUSS TO POST CONN. PLATE .375"x4"	1'-8"	A709 Gr. 50
	se	2	0.75" THICK CHORD SPLICE PLATE	11.5" DIA.	A709 Gr. 50
	e1	36	L 2x2x1/4"	4'-6.625"	A709 Gr. 36
	e2	14	L 2x2x1/4"	2'-6.50"	A709 Gr. 36
	t5	24	1"ø HEX BOLT	3"	A325
	n5	24	1"ø HEX NUT	---	A563DH
	w5	24	1"ø FLAT WASHER	---	F436
LT		1	LEFT POST ASSEMBLY		
		1	UPRIGHT PIPE 18" O.D. x .375" THICK	26'-8.50"	A500 Gr. B/~~API 5L/X~~
	p7	4	TRUSS TO POST CONN. PLATE .50"x12.75"	1'-4"	A709 Gr. 50
	p8	2	TRUSS TO POST CONN. PLATE .50"x6.50"	9"	A709 Gr. 50
	u3	4	.75"ø U-BOLT	6.75"	F1554 Gr 36
	lk3	8	.75"ø SELF LOCKING HEX NUT	---	A563DH
	w3	8	.75"ø FLAT WASHER	---	F436
		1	POST CAP		
	br6	1	L1 1/2x1 1/2x1/4"	17.25"	A709 Gr. 36
	tp	1	.25" THICK END CAP PLATE	18.5"ø	A709 Gr. 36
	t6	1	.50"ø HEX BOLT	1.5"	A307
	tn	1	.50"ø HEX NUT	---	A563
	w8	1	.50"ø GALVANIZED WASHER	---	F844
	w7	1	.50"ø RUBBER WASHER	---	50 DURO. NEOPRENE
	gb	1	.125" THICK NEOPRENE GASKET	18.5"ø	50 DURO. NEOPRENE
	gg	1	.50"ø HEX NUT	---	A563
		1	BASE PLATE ASSEMBLY		
	bb	1	2" THICK BASE PLATE	2'-8"ø	A709 Gr. 50
RT		1	RIGHT POST ASSEMBLY		
		1	UPRIGHT PIPE 18" O.D. x .375" THICK	25'-2.50"	A500 Gr. B/~~API 5L/X~~
	p7	4	TRUSS TO POST CONN. PLATE .50"x12.75"	1'-4"	A709 Gr. 50
	p8	2	TRUSS TO POST CONN. PLATE .50"x6.50"	9"	A709 Gr. 50
	u3	4	.75"ø U-BOLT	6.75"	F1554 Gr 36
	lk3	8	.75"ø SELF LOCKING HEX NUT	---	A563DH
	w3	8	.75"ø FLAT WASHER	---	F436
		1	POST CAP		
	br6	1	L1 1/2x1 1/2x1/4"	17.25"	A709 Gr. 36
	tp	1	.25" THICK END CAP PLATE	18.5"ø	A709 Gr. 36
	t6	1	.50"ø HEX BOLT	1.5"	A307
	tn	1	.50"ø HEX NUT	---	A563
	w8	1	.50"ø GALVANIZED WASHER	---	F844
	w7	1	.50"ø RUBBER WASHER	---	50 DURO. NEOPRENE
	gb	1	.125" THICK NEOPRENE GASKET	18.5"ø	50 DURO. NEOPRENE
	gg	1	.50"ø HEX NUT	---	A563
		1	BASE PLATE ASSEMBLY		
	bb	1	2" THICK BASE PLATE	2'-8"ø	A709 Gr. 50
	ar	8	1.75"ø ANCHOR BOLT	5'-3"	STAINLESS STEEL TYPE 304
	w6	16	1.75"ø WASHER	---	STAINLESS STEEL TYPE 304
	hh	8	1.75"ø HEAVY HEX NUT	---	M292 Gr 8
	lt	8	1.75"ø LEVELING NUT	---	M292 Gr 8
	lr	8	1.75"ø LOCK WASHER	---	STAINLESS STEEL TYPE 304
		2	HAND HOLE		
	r5	2	0.625"x2.5" FLAT BAR	1'-9.50"	A709 Gr. 36
	r6	2	0.25"x5.5" COVER PLATE	8"	A709 Gr. 36
	ga	2	0.125"x5.25" GASKET	7.75"	NEOPRENE
	cb	16	.375"ø HEX BOLE	1"	A563
			SIGN ASSEMBLY		
	v4	3	W6x8.5 VERTICAL SIGN HANGER	8'-6"	A709 Gr. 36
	v5	3	W6x8.5 VERTICAL SIGN HANGER	7'-0"	A709 Gr. 36
	u4	12	.50"ø U-BOLT	6"	F1554 Gr 36
	lk3	24	.50"ø SELF LOCKING HEX NUT	---	A563DH
	w3	24	.50"ø FLAT WASHER	---	F436

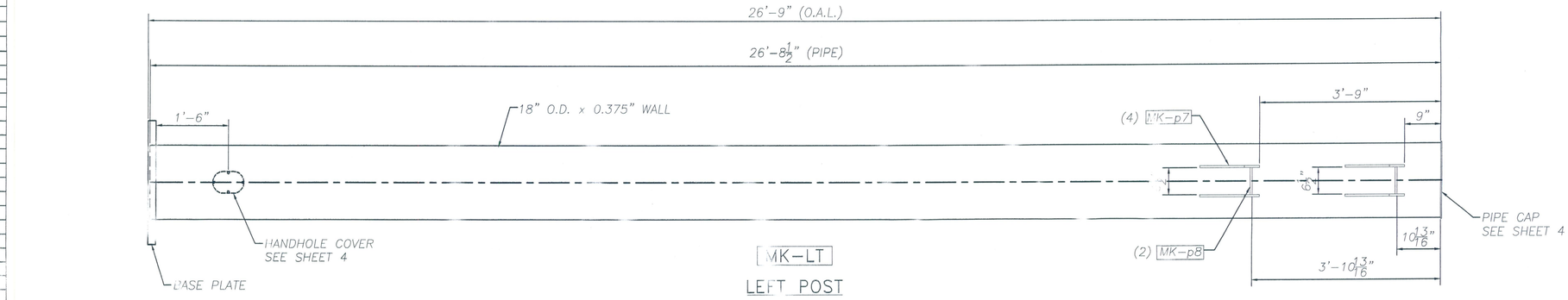

MK-LT

LEFT POST

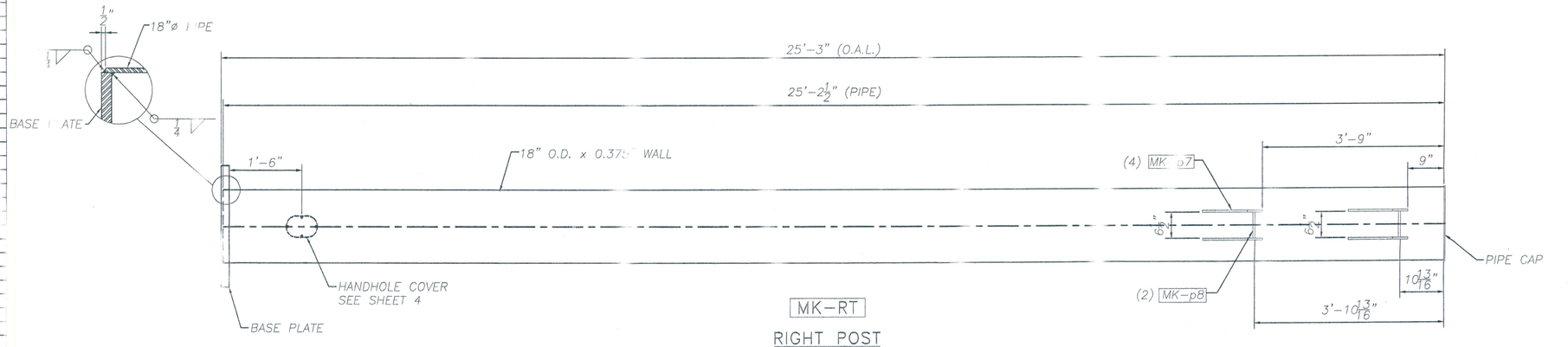

MK-RT

RIGHT POST

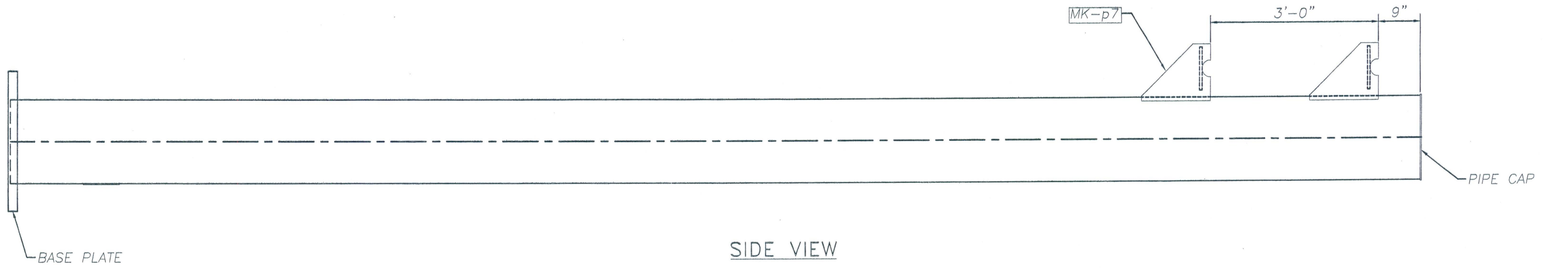

SIDE VIEW

REVISIONS		
No.	Remarks	Date
0	Initial submittal	

RECEIVED
CK'D BY_____ OK'D BY_____
SEP 05 2006
RESUBMIT_____ APPROVED As Noted
BY _____ DATE 9/14/06

HIGHWAY SAFETY CORP.
GLASTONBURY, CT

TRI-CHORD SIGN STRUCTURE
I-89 SB EXIT 14W RAMP "C"
CHITTENDEN COUNTY, VERMONT
CITY OF SOUTH BURLINGTON
PROJECT No. ACIM 089-3(37)

GENERAL CONTRACTOR
SUB CONTRACTOR F.R. LAFEYETTE

DESIGN MHM
CHECKED
DATE 8/29/06
SCALE N.T.S.
HSC REFERENCE NO. 1558
SIZE D REVISION 0
SHEET NO. 7 of 8

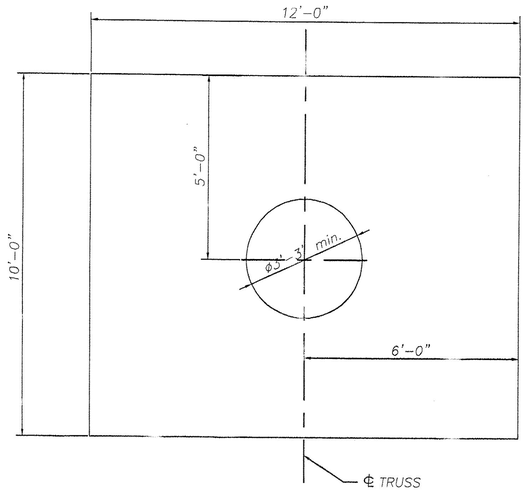

PLAN

REBAR LIST

REBAR	PCS. REQRD.	LENGTH
#4	18	9'-6"
#4	6	10'-5"
#5	12	11'-6"
#5 (HOOK ONE END)	22	8'-6"

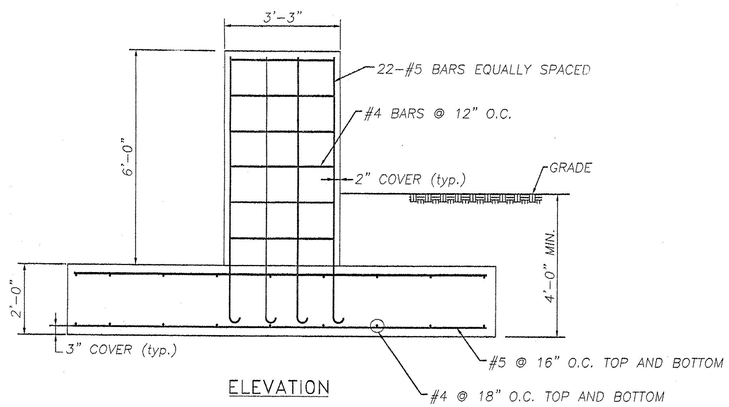

ELEVATION

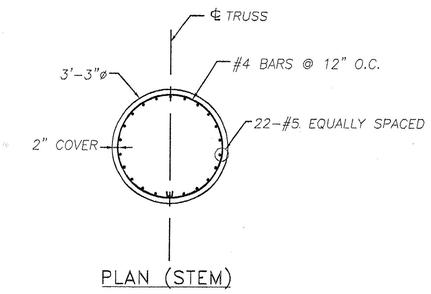

PLAN (STEM)

REVISIONS		
No.	Remarks	Date
0	Initial submittal	

RECEIVED
CK'D BY _____ CK'D BY _____
SEP 05 2006
RESUBMIT _____ APPROVED ✓
BY WJ DATE 9/6/06

HIGHWAY SAFETY CORP.
GLASTONBURY, CT

TRI-CHORD SIGN STRUCTURE
I-89 SB EXIT 14W RAMP "C"
CHITTENDEN COUNTY, VERMONT
CITY OF SOUTH BURLINGTON
PROJECT No. ACIM 089-3(37)

GENERAL CONTRACTOR
SUB CONTRACTOR F.R. LAFEYETTE

DRAWN	MHM
CHECKED	
DATE	8/29/06
SCALE	N.T.S.
HSC REFERENCE NO.	1558
SIZE	D
REVISION	0
SHEET NO.	8 of 8

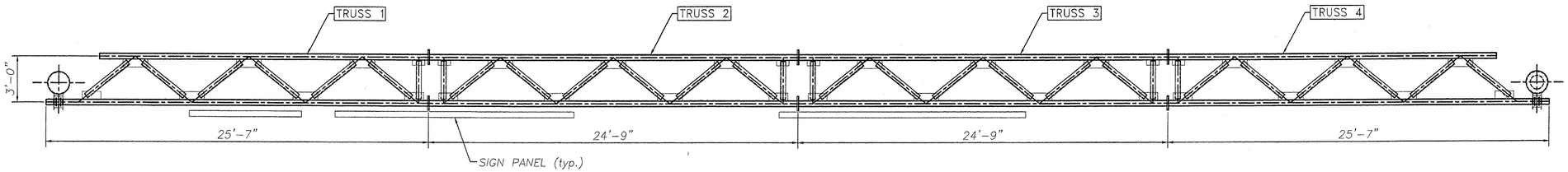

A SECTION

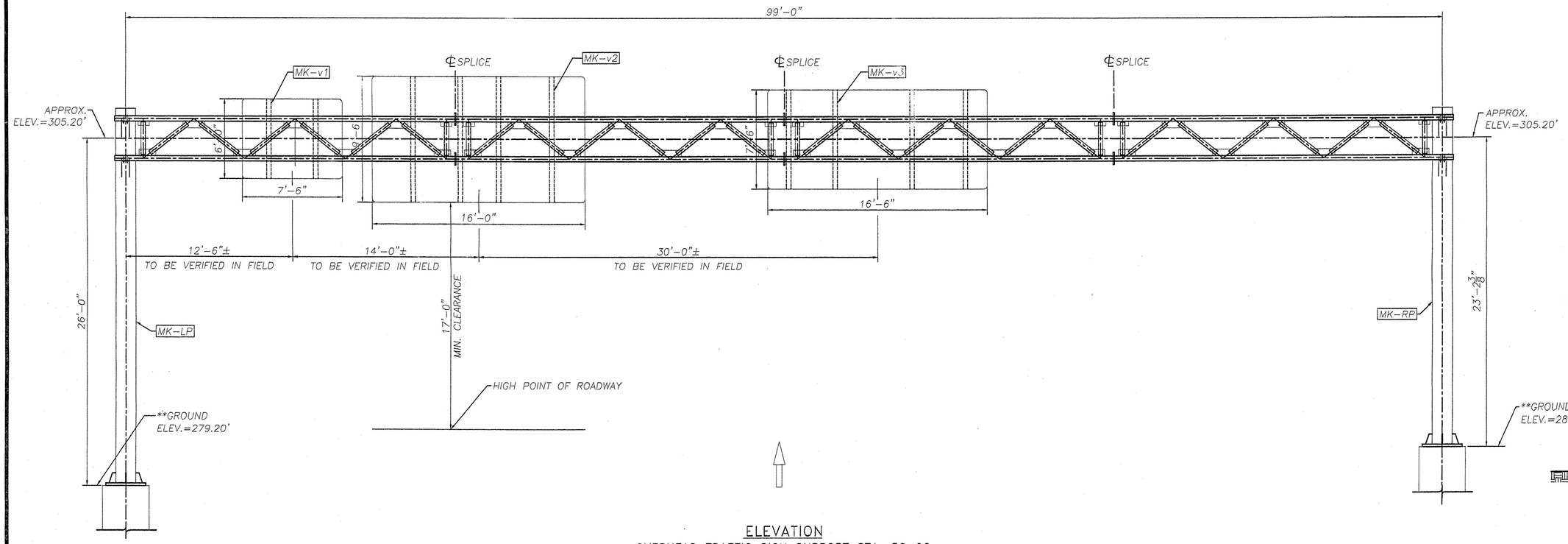

ELEVATION
OVERHEAD TRAFFIC SIGN SUPPORT STA. 56+90
LOOKING AT FACE OF SIGN
(OUT OF PLANE CHORDS NOT SHOWN FOR CLARITY)

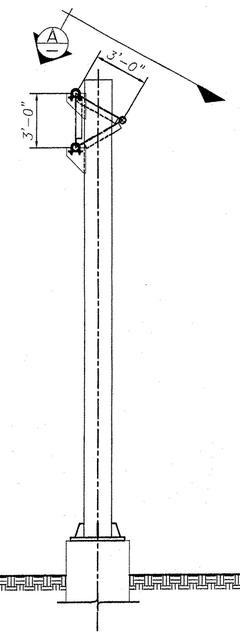

SIDE VIEW

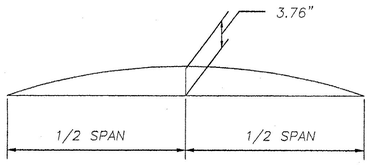

CAMBER DIAGRAM

NOTE:

CAMBER WILL BE ACHIEVED BY SHORTENING LOWER CHORD PIPES BY AN AMOUNT SUCH THAT POSITIVE UPWARD DEFLECTION IS PRODUCED WHEN TRUSSES ARE BROUGHT TOGETHER AT SPLICES.

(**) GROUND ELEVATION IS PROVIDED IN CONTRACT DRAWINGS, TOP OF CONCRETE ELEVATION TO BE VERIFIED AND ADJUST POST HEIGHTS AS NEEDED PRIOR TO FABRICATION TO MAINTAIN MINIMUM SIGN CLEARANCE.

REVISIONS		
No.	Remarks	Date
0	Initial submittal	

RECEIVED
CK'D BY _____ CK'D BY _____
SEP 05 2006
RESUBMIT _____ APPROVED ✓
BY VJ DATE 9/6/06

HIGHWAY SAFETY CORP.
GLASTONBURY, CT

TRI-CHORD SIGN STRUCTURE
I-89 SB EXIT 14W RAMP "C"
CHITTENDEN COUNTY, VERMONT
CITY OF SOUTH BURLINGTON
PROJECT No. ACIM 089-3(37)

GENERAL CONTRACTOR
SUB CONTRACTOR F.R. LAFEYETTE

DRAWN	MHM
CHECKED	
DATE	8/29/06
SCALE	N.T.S.
HSC REFERENCE NO.	1557
SIZE D	REVISION 0
SHEET NO.	1 of 10

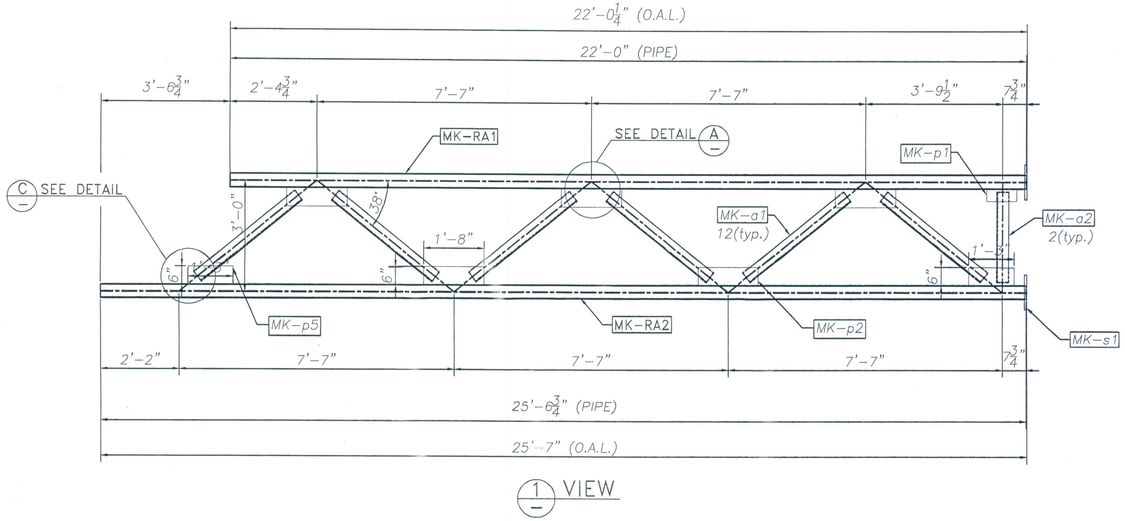

1 VIEW

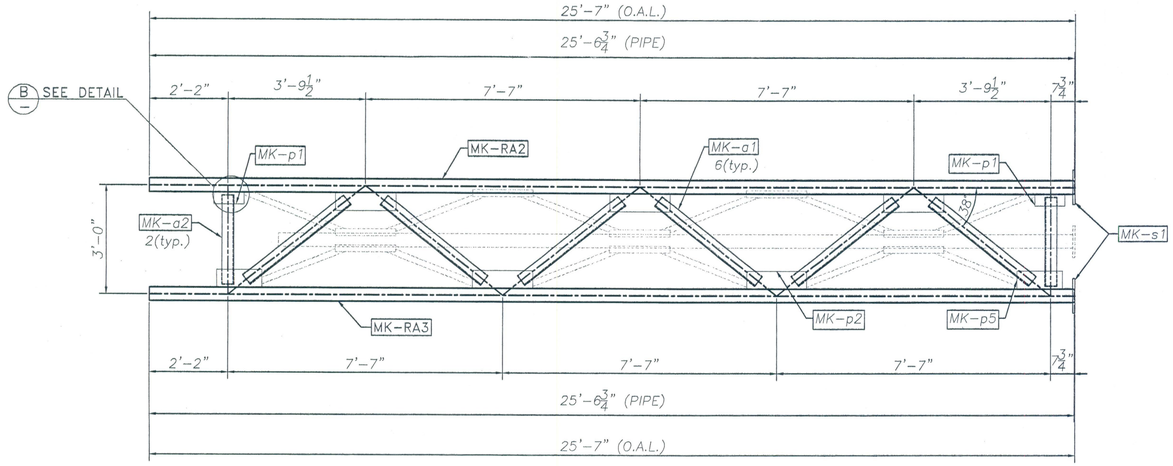

FRONT VIEW

TRUSS 1

STAMP T1 IN ONE FLANGE

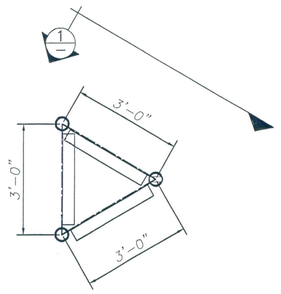

SIDE VIEW

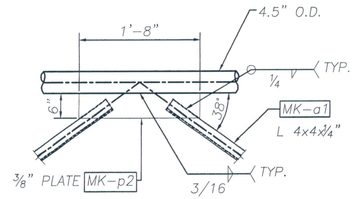

DETAIL "A"

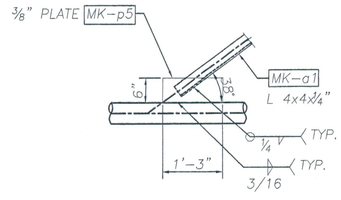

DETAIL "C"

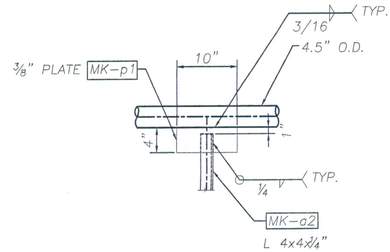

DETAIL "B"

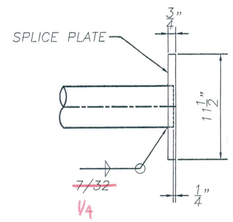

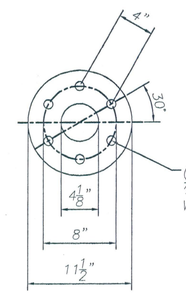

(6) 15/16"ø HOLES EQUALLY SPACED FOR 7/8"ø BOLTS x 3" LONG MK-t1, 7/8"ø FLAT WASHER MK-w1, 7/8"ø HEAVY HEX NUT MK-n1

SPLICE DETAIL

MK-s1

NOTES:

1. PRIOR TO GALVANIZING, ALL CORNERS AND EDGES OF STEEL PLATES, SHAPES, ETC., SHALL BE GROUND TO A 1/16 INCH RADIUS.
2. SEAL WELD ALL CONNECTIONS WHEN POSSIBLE.

REVISIONS		
No.	Remarks	Date
0	Initial submittal	

RECEIVED
CK'D BY_____ OK'D BY_____
SEP 05 2006
RESUBMIT_____ APPROVED As Noted
BY VG DATE 9/6/06

HIGHWAY SAFETY CORP.
GLASTONBURY, CT

TRI-CHORD SIGN STRUCTURE
I-89 SB EXIT 14W RAMP "C"
CHITTENDEN COUNTY, VERMONT
CITY OF SOUTH BURLINGTON
PROJECT No. ACIM 089-3(37)

GENERAL CONTRACTOR
SUB CONTRACTOR F.R. LAFEYETTE

DRAWN MHM
CHECKED
DATE 8/29/06
SCALE N.T.S.
HSC REFERENCE NO. 1557
SIZE D REVISION 0
SHEET NO. 2 of 10

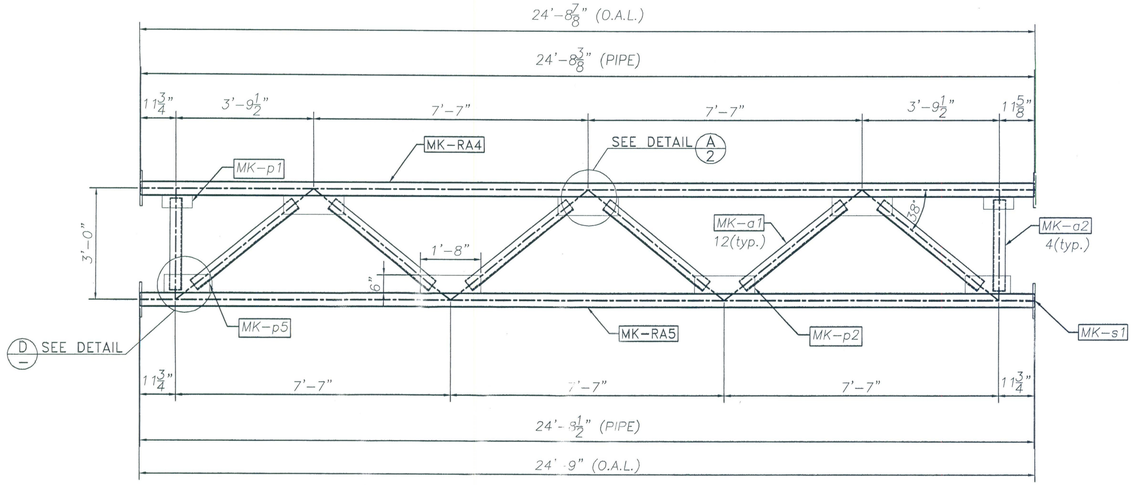

2/- VIEW

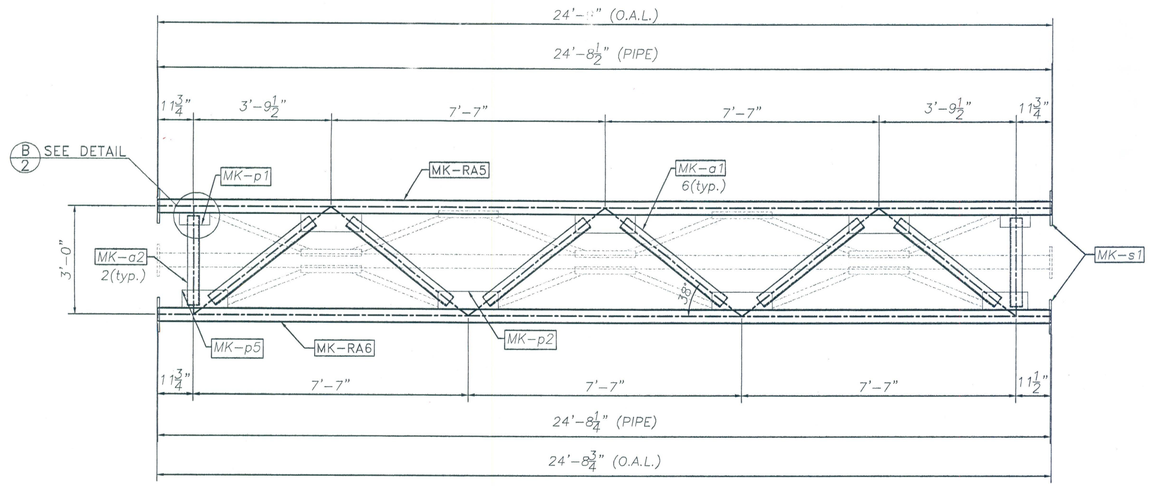

FRONT VIEW

TRUSS 2

STAMP T2 IN ONE FLANGE

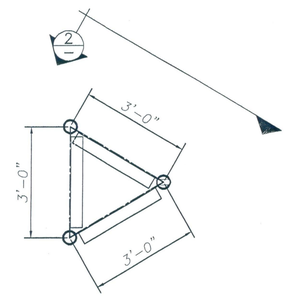

SIDE VIEW

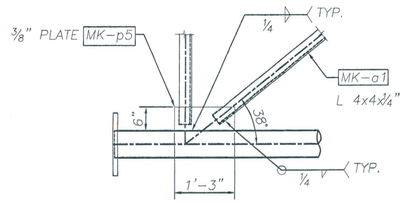

DETAIL "D"

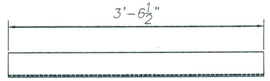

MK-a1

L4x4x.25"

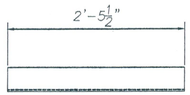

MK-a2

L4x4x.25"

NOTE:

1. STRUCTURE DESIGNED IN ACCORDANCE WITH LATEST EDITION AASHTO STANDARD SPECIFICATIONS FOR STRUCTURAL SUPPORTS FOR HIGHWAY SIGNS, LUMINARIES AND TRAFFIC SIGNALS.

2. ALL HOLES FOR HIGH STRENGTH FASTENERS SHALL BE DRILLED OR SUB-PUNCHED FULL SIZE. SLOTTED HOLES AND/OR VENT OR ACCESS HOLES MAY BE CUT WITH MECHANICALLY GUIDED PLASMA OR FLAME TORCH.
^ MECHANICALLY GUIDED

3. GRIND SHARP CORNERS OF ALL PLATES TO A $\frac{1}{16}$" MIN. RADIUS PRIOR TO GALVANIZING.

4. ALL WELDING SHALL BE PERFORMED BY QUALIFIED WELDERS IN ACCORDANCE WITH AWS D1.1.

5. ALL STEEL PLATES FOR STRUCTURAL COMPONENTS SHALL BE ASTM A709 GR. 50.

6. STEEL PLATES AND SHAPES FOR NON-STRUCTURAL COMPONENTS SHALL BE ASTM A709 GR. 36.

7. STEEL PIPES FOR STRUCTURAL MEMBERS SHALL HAVE MINIMUM YIELD OF 42 ksi AND SHALL CONFORM TO ONE OF THE FOLLOWING GRADES: ASTM A500 GR. B, ~~OR API 5L/X~~.

8. UNLESS OTHERWISE NOTED, ALL BOLTS FOR STRUCTURAL CONNECTIONS SHALL BE M164 TYPE 1 (A325).

9. GALVANIZED U-BOLTS FOR CONNECTION OF SIGN HANGER BEAMS TO TRUSS SHALL BE ASTM F-1554 GR. 36.

10. ALL STRUCTURAL STEEL SHALL BE HOT-DIPPED GALVANIZED AFTER FABRICATION IN ACCORDANCE WITH AASHTO M111 (ASTM A123).

11. ALL HARDWARE, UNLESS OTHERWISE NOTED, SHALL BE HOT-DIPPED GALVANIZED PER AASHTO M232 (ASTM A153).

12. ANCHOR HARDWARE SHALL BE STAINLESS STEEL AND MEET REQUIREMENTS OF VAOT STANDARD SPECIFICATION 714.09.

13. CONCRETE AND REBAR SHOWN IN FOOTING DESIGN TO BE FURNISHED BY OTHERS.

14. FOUNDATION DESIGN BASED ON USE OF 3000 psi MINIMUM CONCRETE.

15. SPACE BETWEEN THE TOP OF CONCRETE AND THE BOTTOM OF STEEL BASE PLATE SHALL BE FILLED WITH TYPE IV MORTAR AFTER LEVELING.

16. BOLTS INSTALLED IN STRUCTURAL CONNECTIONS SHALL BE PROVIDED AND TENSIONED PER APPLICABLE PROVISIONS OF VAOT STANDARD SPECIFICATIONS SECTION 506.

REVISIONS		
No.	Remarks	Date
0	initial submittal	

RECEIVED
OK'D BY_____ OK'D BY_____
SEP 05 2006
RESUBMIT_____ APPROVED As Noted
BY CJ DATE 9/6/06

HIGHWAY SAFETY CORP.
GLASTONBURY, CT

TRI-CHORD SIGN STRUCTURE
I-89 SB EXIT 14W RAMP "C"
CHITTENDEN COUNTY, VERMONT
CITY OF SOUTH BURLINGTON
PROJECT No. ACIM 089-3(37)

DRAWN MHM
CHECKED
DATE 8/29/06
SCALE N.T.S.
HSC REFERENCE NO. 1557
SIZE D REVISION 0
SHEET NO. 3 of 10

GENERAL CONTRACTOR
SUB CONTRACTOR F.R. LAFEYETTE

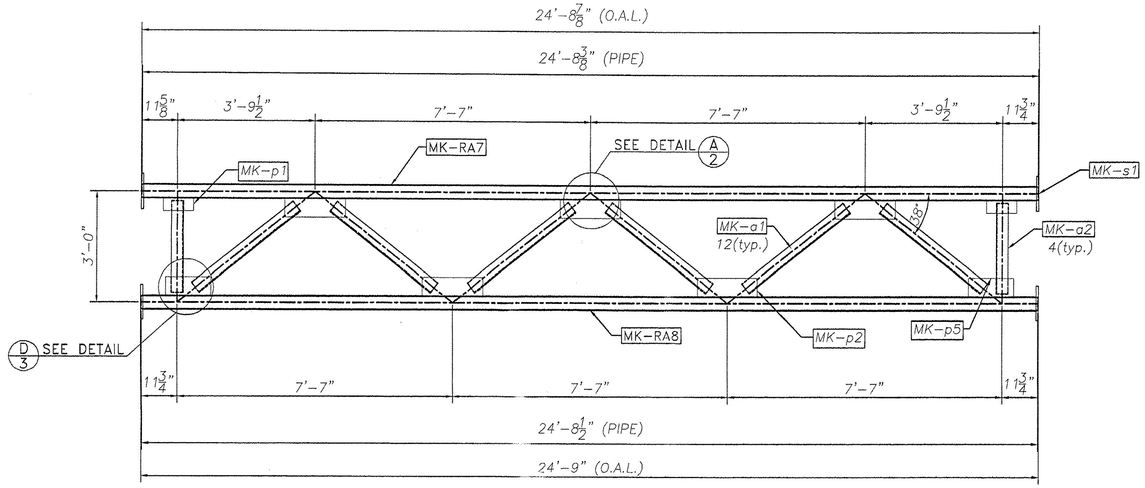

3 VIEW

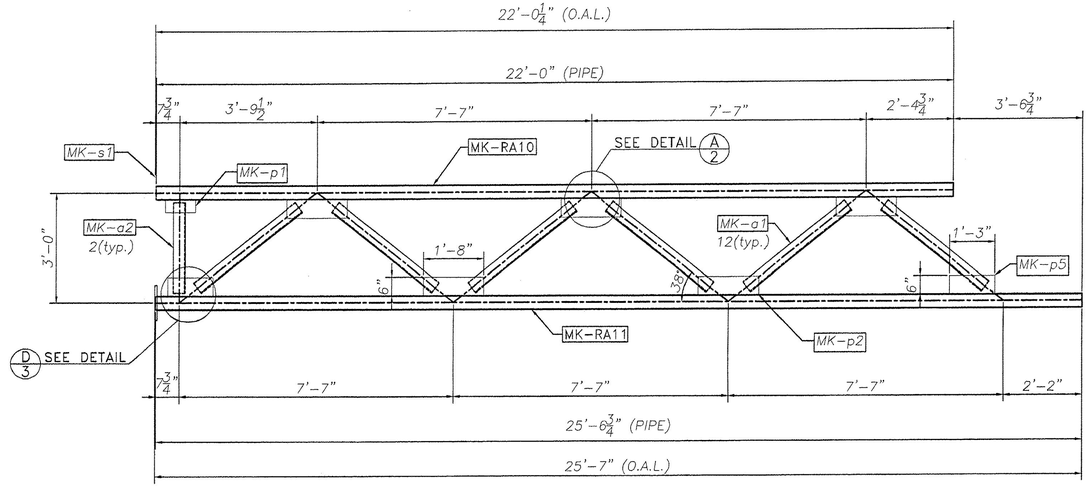

4 VIEW

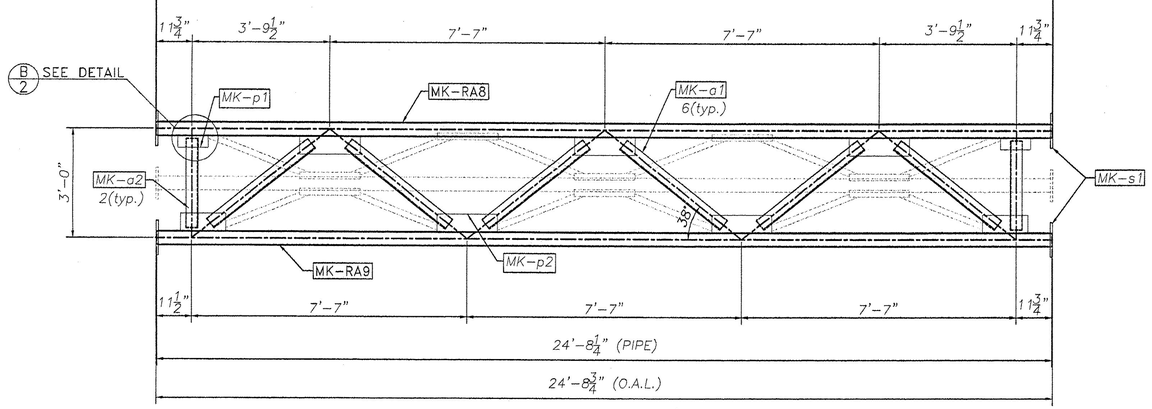

FRONT VIEW

TRUSS 3

STAMP T3 IN ONE FLANGE

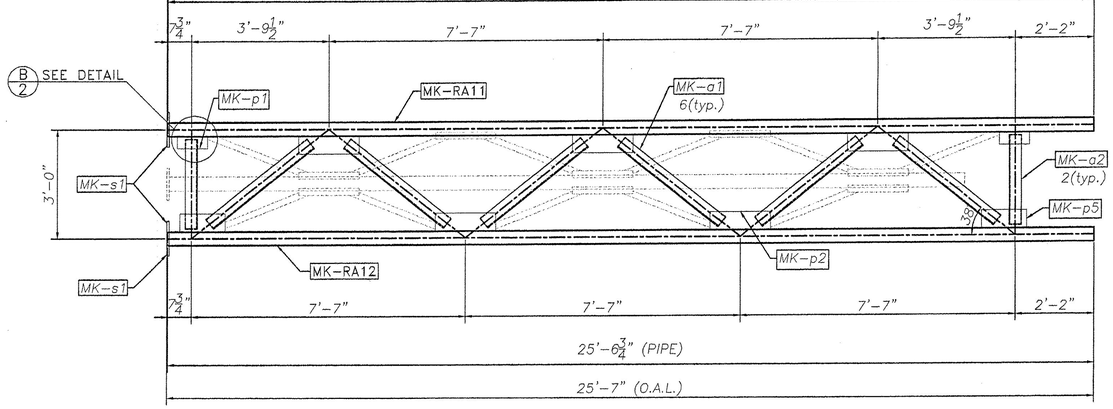

FRONT VIEW

TRUSS 4

STAMP T4 IN ONE FLANGE

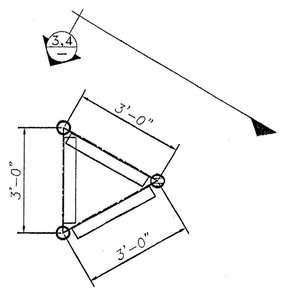

SIDE VIEW

REVISIONS		
No.	Remarks	Date
0	Initial submittal	

RECEIVED
CK'D BY ____ CK'D BY ____
SEP 05 2006
RESUBMIT ____ APPROVED ✓
BY ____ DATE 9/6/06

HIGHWAY SAFETY CORP.
GLASTONBURY, CT

TRI-CHORD SIGN STRUCTURE
I-89 SB EXIT 14W RAMP "C"
CHITTENDEN COUNTY, VERMONT
CITY OF SOUTH BURLINGTON
PROJECT No. ACIM 089-3(37)

GENERAL CONTRACTOR

SUB CONTRACTOR F.R. LAFEYETTE

DRAWN	MHM
CHECKED	
DATE	8/29/06
SCALE	N.T.S.
HSC REFERENCE NO.	1557
SIZE	D
REVISION	0
SHEET NO.	4 of 10

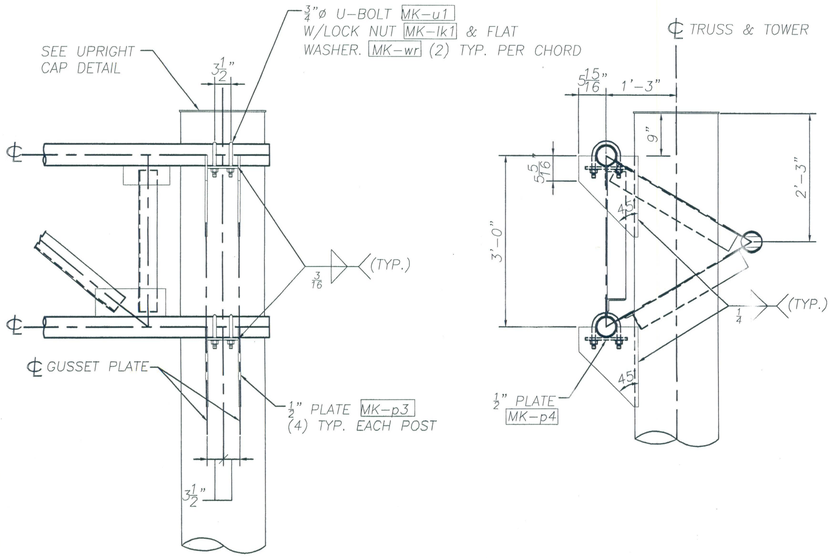

TRUSS CONNECTION DETAIL

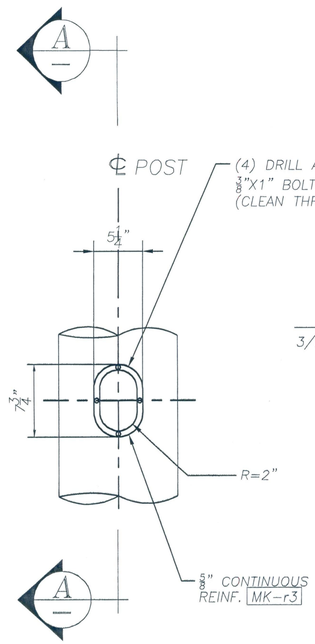

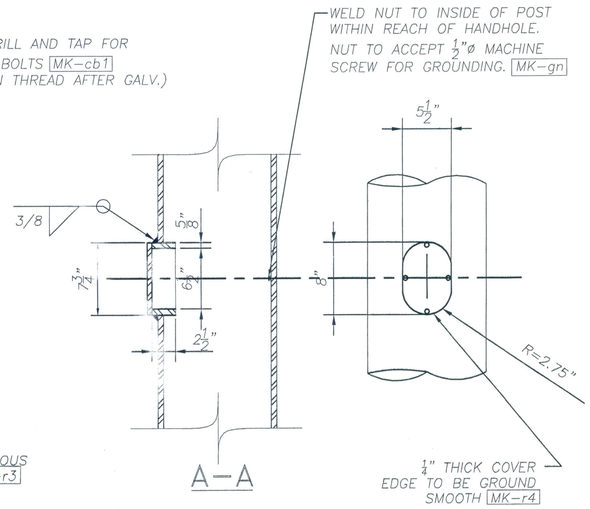

POST HANDHOLE DETAIL

PLACE ON SIDE OF POLE
AWAY FROM APPROACHING TRAFFIC

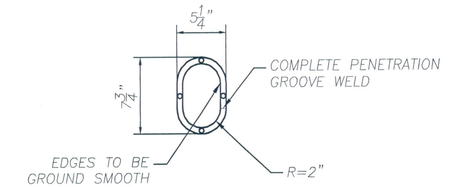

HANDHOLE REINF.

MK-r3

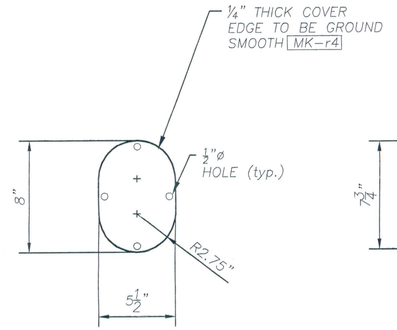

HANDHOLE COVER

MK-r4

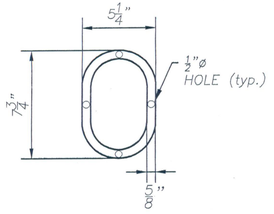

GASKET

MK-n4

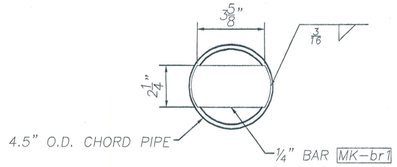

PLUG DETAIL

(EACH END OF TRUSS CHORD)

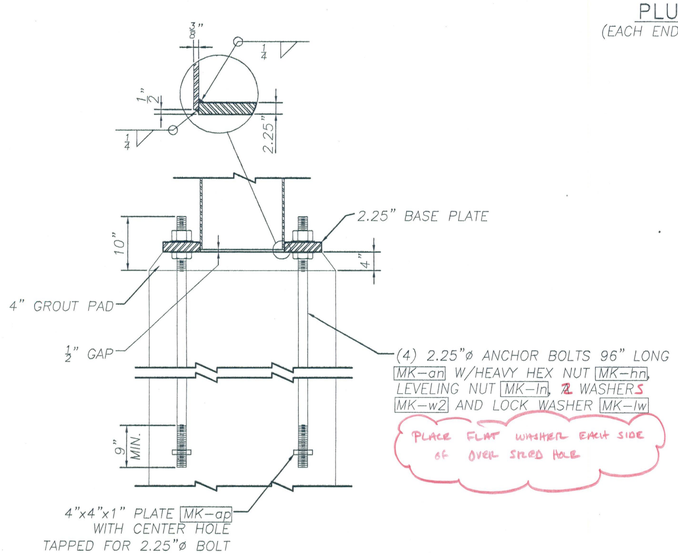

ANCHORAGE ASSEMBLY

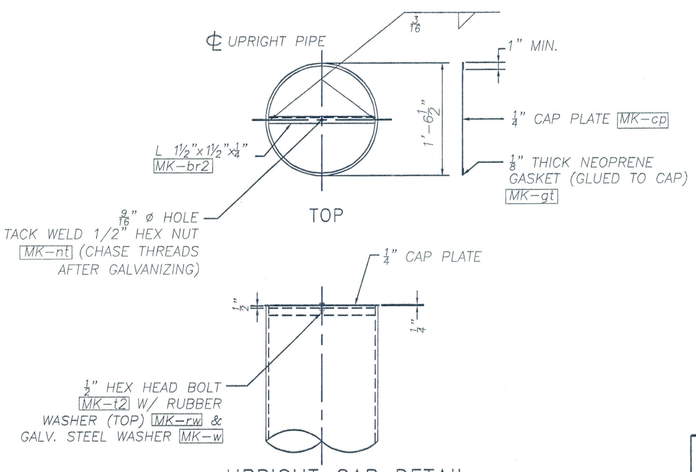

UPRIGHT CAP DETAIL

ASSEMBLE CAP TO POST PRIOR TO SHIPPING.

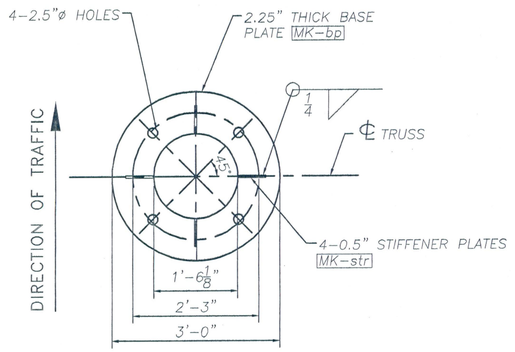

BASE PLATE DETAIL

MK-bp

REVISIONS		
No.	Remarks	Date
0	Initial submittal	

RECEIVED
CK'D BY_____ OK'D BY_____
SEP 05 2006
RESUBMIT_____ APPROVED As Noted
BY WJG DATE 9/6/06

HIGHWAY SAFETY CORP.
GLASTONBURY, CT

TRI-CHORD SIGN STRUCTURE
I-89 SB EXIT 14W RAMP "C"
CHITTENDEN COUNTY, VERMONT
CITY OF SOUTH BURLINGTON
PROJECT No. ACIM 089-3(37)

GENERAL CONTRACTOR
SUB CONTRACTOR F.R. LAFEYETTE

DRAWN MHM
CHECKED
DATE 8/29/06
SCALE N.T.S.
HSC REFERENCE NO. 1557
SIZE D REVISION 0
SHEET NO. 5 of 10

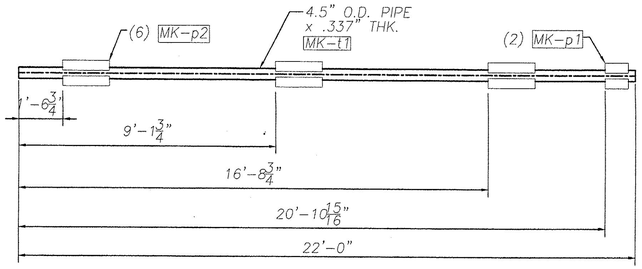

MK-RA1

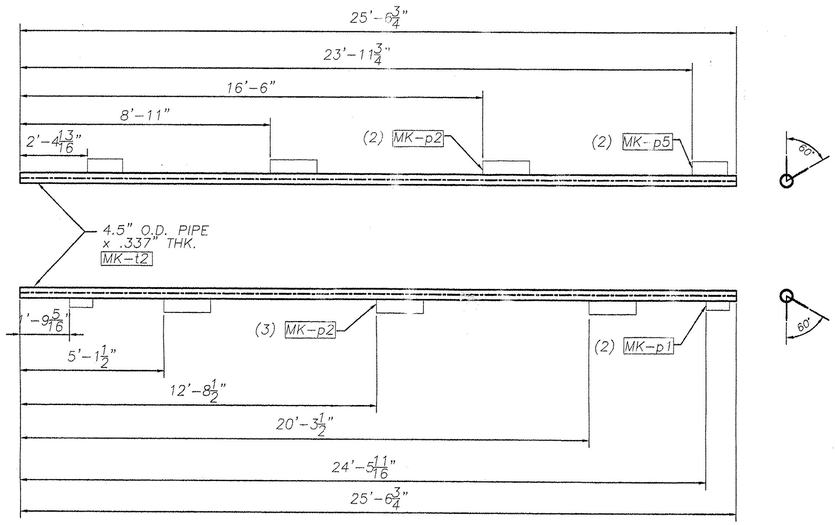

MK-RA2

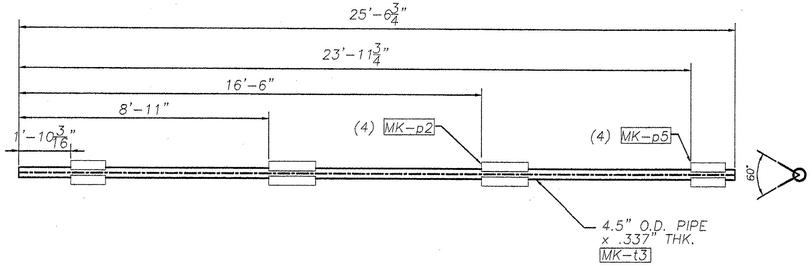

MK-RA3

TRUSS 1

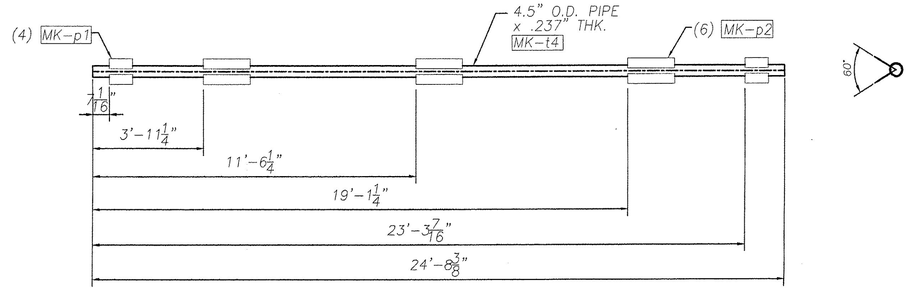

MK-RA4

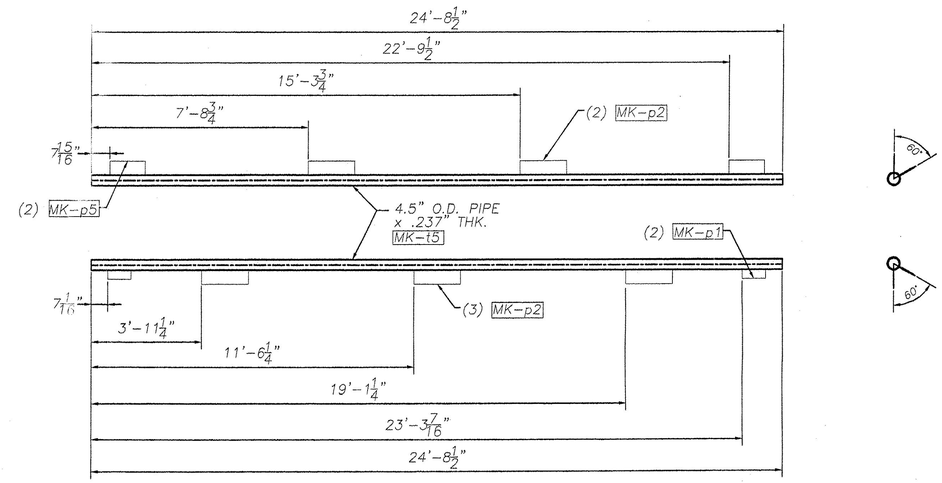

MK-RA5

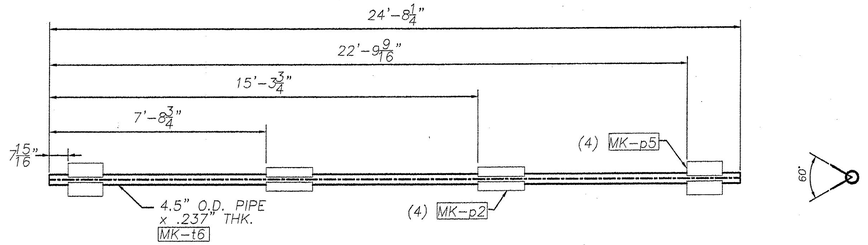

MK-RA6

TRUSS 2

RECEIVED
OK'D BY _____ OK'D BY _____
SEP 05 2006
RESUBMIT _____ APPROVED ✓
BY VJ DATE 9/6/06

REVISIONS		
No.	Remarks	Date
0	Initial submittal	

HIGHWAY SAFETY CORP.
GLASTONBURY, CT

TRI-CHORD SIGN STRUCTURE
I-89 SB EXIT 14W RAMP "C"
CHITTENDEN COUNTY, VERMONT
CITY OF SOUTH BURLINGTON
PROJECT No. ACIM 089-3(37)

GENERAL CONTRACTOR
SUB CONTRACTOR F.R. LAFEYETTE

DRAWN MHM
CHECKED
DATE 8/29/06
SCALE NTS
HSC REFERENCE NO. 1557
SIZE D REVISION 0
SHEET NO. 6 of 10

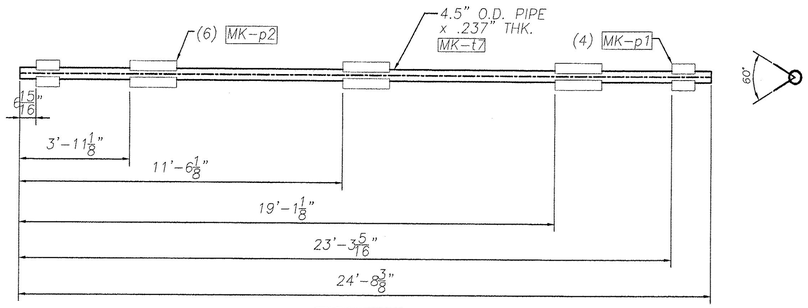

MK-RA7

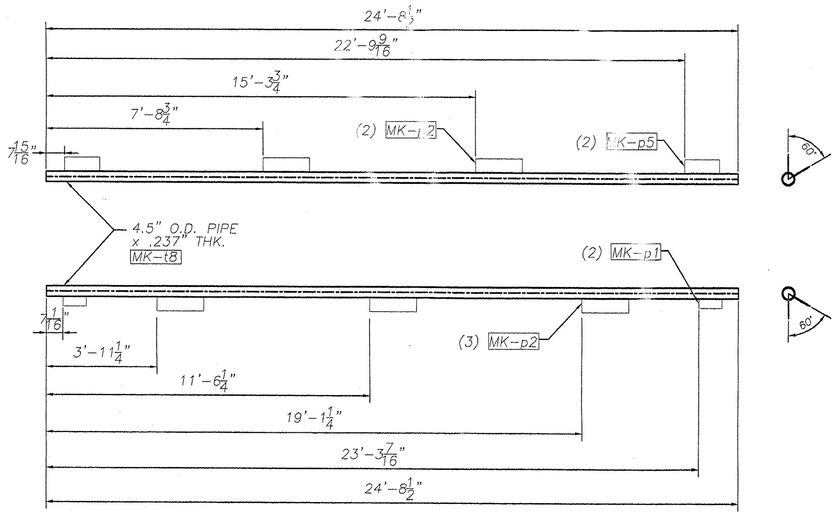

MK-RA8

TRUSS 3

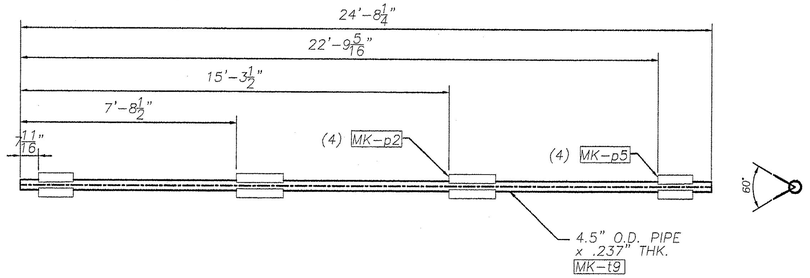

MK-RA9

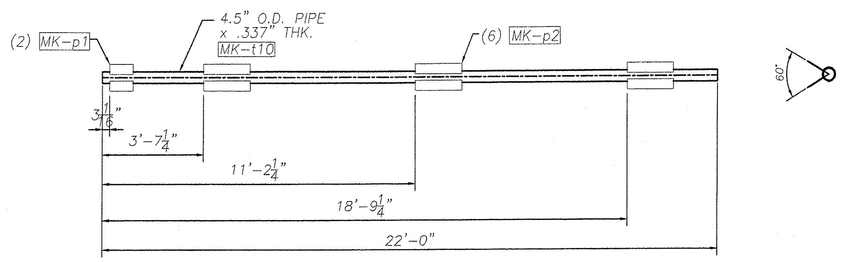

MK-RA10

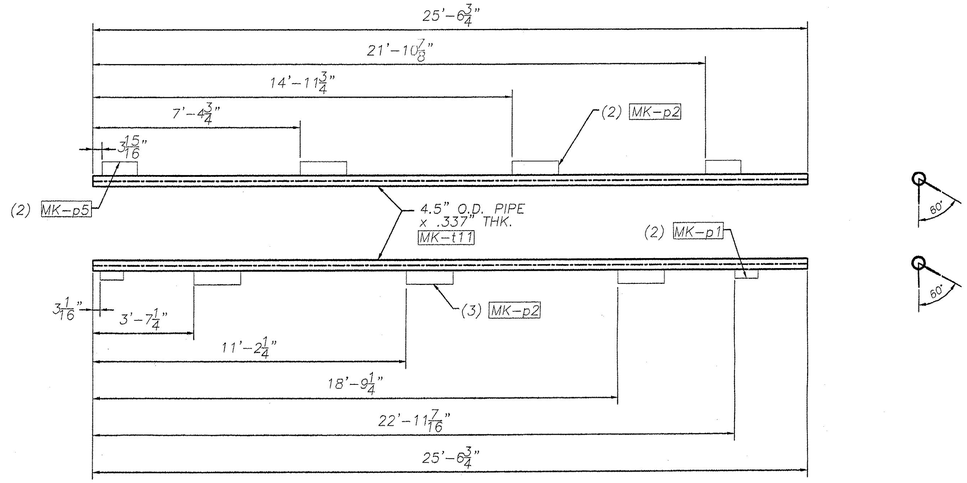

MK-RA11

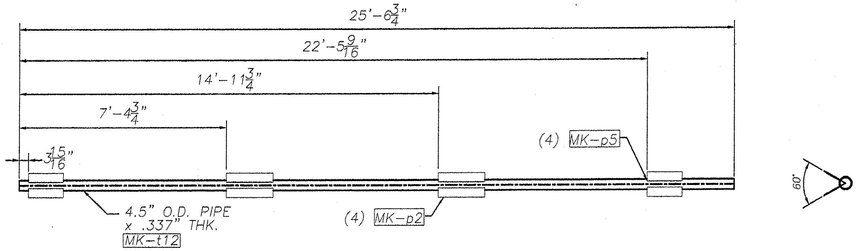

MK-RA12

TRUSS 4

RECEIVED
CK'D BY_____ CK'D BY_____
SEP 0 5 2006
RESUBMIT_____ APPROVED_____
BY WJ DATE 9/6/06

REVISIONS		
No.	Remarks	Date
0	Initial submittal	

HIGHWAY SAFETY CORP.
GLASTONBURY, CT

TRI-CHORD SIGN STRUCTURE
I-89 SB EXIT 14W RAMP "C"
CHITTENDEN COUNTY, VERMONT
CITY OF SOUTH BURLINGTON
PROJECT No. ACIM 089-3(37)

GENERAL CONTRACTOR
SUB CONTRACTOR F.R. LAFEYETTE

DRAWN MHM
CHECKED
DATE 8/29/06
SCALE NTS
HSC REFERENCE NO. 1557
SIZE D REVISION 0
SHEET NO. 7 of 10

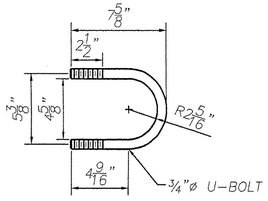

MK-u1

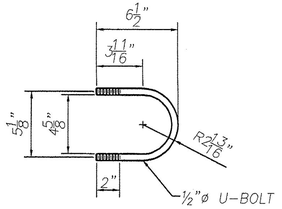

MK-u2

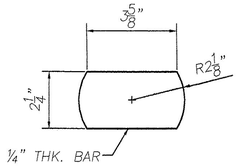

MK-br1

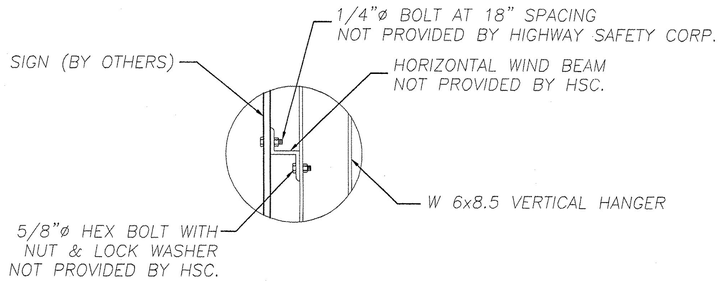

SIGN ATTACHMENT DETAIL

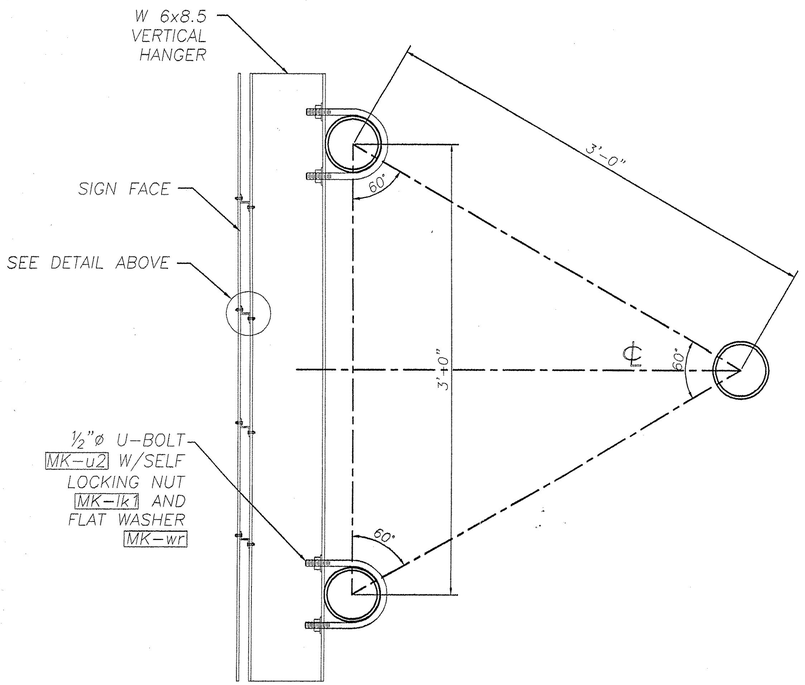

SIGN MOUNTING DETAIL

VERTICAL HANGER BEAMS & U-BOLTS INCLUDED

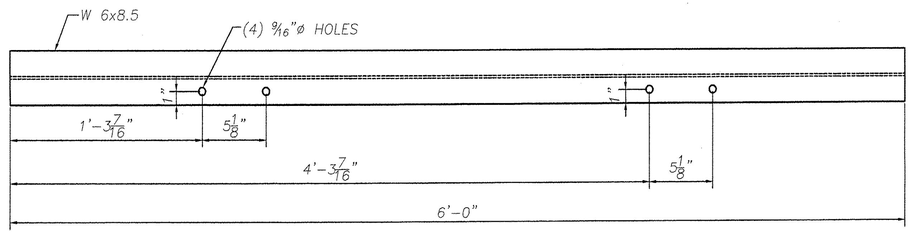

MK-v1

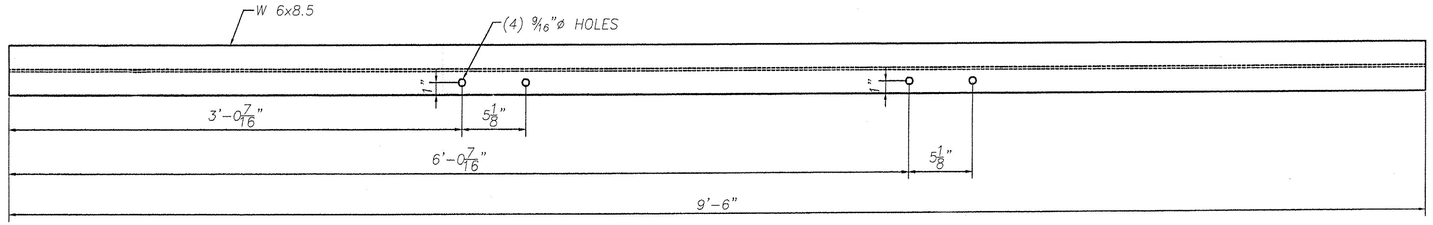

MK-v2

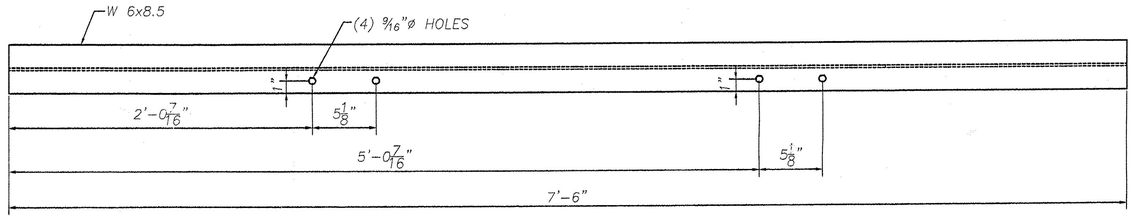

MK-v3

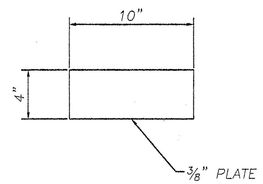

MK-p1

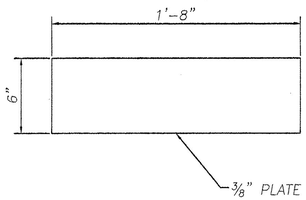

MK-p2

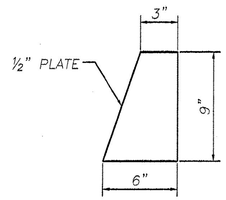

MK-str

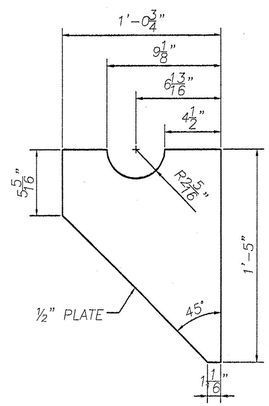

MK-p3

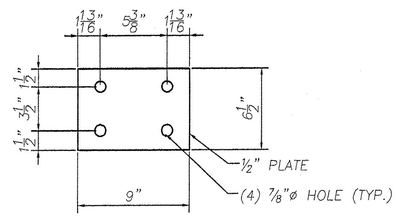

MK-p4

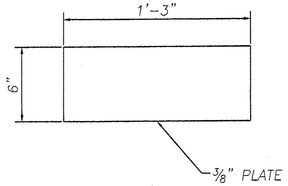

MK-p5

RECEIVED
CK'D BY _____ CK'D BY _____
SEP 05 2006
RESUBMIT _____ APPROVED ✓
BY WJ DATE 9/6/06

REVISIONS		
No.	Remarks	Date
0	initial submittal	

HIGHWAY SAFETY CORP.
GLASTONBURY, CT

TRI-CHORD SIGN STRUCTURE
I-89 SB EXIT 14W RAMP "C"
CHITTENDEN COUNTY, VERMONT
CITY OF SOUTH BURLINGTON
PROJECT No. ACIM 089-3(37)

GENERAL CONTRACTOR
SUB CONTRACTOR F.R. LAFEYETTE

DRAWN	MHM
CHECKED	
DATE	8/29/06
SCALE	NTS
HSC REFERENCE NO.	1557
SIZE D	REVISION 0
SHEET NO.	8 of 10

BILL OF MATERIAL

Mk.	Mk.	Qty.	Description	Length	Material
RA1,RA10		2	CHORD TRUSS ASSEMBLY		
	t1,t10	2	CHORD PIPE 4.5" O.D. x .337" THICK	22'-0"	A500 Gr. B/~~API 5L/X~~
	p1	4	TRUSS TO CHORD CONN. PLATE .375"x4"	10"	A709 Gr. 50
	p2	12	TRUSS TO CHORD CONN. PLATE .375"x6"	1'-8"	A709 Gr. 50
	s1	2	0.75" THICK CHORD SPLICE PLATE	11.5" DIA.	A709 Gr. 50
	br1	2	PLUG BAR .250"x2.25"	3.375"	A709 Gr. 50
RA2,RA11		2	CHORD TRUSS ASSEMBLY		
	t2,t11	2	CHORD PIPE 4.5" O.D. x .337" THICK	25'-6.75"	A500 Gr. B/~~API 5L/X~~
	p1	4	TRUSS TO POST CONN. PLATE .375"x4"	10"	A709 Gr. 50
	p2	10	TRUSS TO POST CONN. PLATE .375"x4"	1'-8"	A709 Gr. 50
	p5	4	TRUSS TO POST CONN. PLATE .375"x6"	1'-3"	A709 Gr. 50
	s1	2	0.75" THICK CHORD SPLICE PLATE	11.5" DIA.	A709 Gr. 50
	br1	2	PLUG BAR .250"x2.25"	3.375"	A709 Gr. 50
RA3,RA12		2	CHORD TRUSS ASSEMBLY		
	t3,t12	2	CHORD PIPE 4.5" O.D. x .337" THICK	25'-6.75"	A500 Gr. B/~~API 5L/X~~
	p5	8	TRUSS TO POST CONN. PLATE .375"x6"	1'-3"	A709 Gr. 50
	p2	8	TRUSS TO POST CONN. PLATE .375"x4"	1'-8"	A709 Gr. 50
	s1	2	0.75" THICK CHORD SPLICE PLATE	11.5" DIA.	A709 Gr. 50
	br1	2	PLUG BAR .250"x2.25"	3.375"	A709 Gr. 50
RA4,RA7		2	CHORD TRUSS ASSEMBLY		
	t4,t7	2	CHORD PIPE 4.5" O.D. x .237" THICK	24'-8.375"	A500 Gr. B/~~API 5L/X~~
	p1	8	TRUSS TO CHORD CONN. PLATE .375"x4"	10"	A709 Gr. 50
	p2	12	TRUSS TO CHORD CONN. PLATE .375"x4"	1'-8"	A709 Gr. 50
	s1	4	0.75" THICK CHORD SPLICE PLATE	11.5" DIA.	A709 Gr. 50
RA5,RA8		2	CHORD TRUSS ASSEMBLY		
	t5,t8	2	CHORD PIPE 4.5" O.D. x .237" THICK	24'-8.50"	A500 Gr. B/~~API 5L/X~~
	p1	4	TRUSS TO POST CONN. PLATE .375"x4"	10"	A709 Gr. 50
	p2	10	TRUSS TO POST CONN. PLATE .375"x4"	1'-8"	A709 Gr. 50
	p5	4	TRUSS TO POST CONN. PLATE .375"x6"	1'-3"	A709 Gr. 50
	s1	4	0.75" THICK CHORD SPLICE PLATE	11.5" DIA.	A709 Gr. 50
RA6,RA9		2	CHORD TRUSS ASSEMBLY		
	t6,t9	2	CHORD PIPE 4.5" O.D. x .237" THICK	24'-8.25"	A500 Gr. B/~~API 5L/X~~
	p5	8	TRUSS TO POST CONN. PLATE .375"x6"	1'-3"	A709 Gr. 50
	p2	8	TRUSS TO POST CONN. PLATE .375"x4"	1'-8"	A709 Gr. 50
	s1	4	0.75" THICK CHORD SPLICE PLATE	11.5" DIA.	A709 Gr. 50
	a1	54	L 4x4x1/4"	3'-6.5"	A709 Gr. 36
	a2	16	L 4x4x1/4"	2'-5.50"	A709 Gr. 36
	t1	54	.750"ø HEX BOLT	3"	A325
	n1	54	.750"ø HEX NUT	---	A563DH
	w1	54	.750"ø FLAT WASHER	---	F436
LP		1	LEFT POST ASSEMBLY		
		1	UPRIGHT PIPE 18" O.D. x .375" THICK	28'-2.50"	A500 Gr. B/~~API 5L/X~~
	p3	4	TRUSS TO POST CONN. PLATE .50"x12.75"	1'-5"	A709 Gr. 50
	p4	2	TRUSS TO POST CONN. PLATE .50"x6.50"	9"	A709 Gr. 50
	u1	4	.75"ø U-BOLT	7.625"	F1554 Gr 36
	lk1	8	.75"ø SELF LOCKING HEX NUT	---	A563DH
	wr	8	.75"ø FLAT WASHER	---	F436
	str	4	STIFFENER PLATE .5" x 6"	9"	A709 Gr. 50
		1	POST CAP		
	br2	1	L1 1/2x1 1/2x1/4"	17.25"	A709 Gr. 36
	cp	1	.25" THICK END CAP PLATE	18.5"ø	A709 Gr. 36
	t2	1	.50"ø HEX BOLT	1.5"	A307
	nt	1	.50"ø HEX NUT	---	A563
	w	1	.50"ø GALVANIZED WASHER	---	F844
	rw	1	.50"ø RUBBER WASHER	---	50 DURO. NEOPRENE
	gt	1	.125" THICK NEOPRENE GASKET	18.5"ø	50 DURO. NEOPRENE
	gn	1	.50"ø HEX NUT	---	A563
		1	BASE PLATE ASSEMBLY		
	bp	1	2.25" THICK BASE PLATE	3'-0"ø	A709 Gr. 50
RP		1	RIGHT POST ASSEMBLY		
		1	UPRIGHT PIPE 18" O.D. x .375" THICK	25'-4.875"	A500 Gr. B/~~API 5L/X~~
	p3	4	TRUSS TO POST CONN. PLATE .50"x12.75"	1'-5"	A709 Gr. 50
	p4	2	TRUSS TO POST CONN. PLATE .50"x6.50"	9"	A709 Gr. 50
	u1	4	.50"ø U-BOLT	7.063"	F1554 Gr 36
	lk1	8	.50"ø SELF LOCKING HEX NUT	---	A563DH
	wr	8	.50"ø FLAT WASHER	---	F436
	str	4	STIFFENER PLATE .5" x 6"	9"	A709 Gr. 50
		1	POST CAP		
	br2	1	L1 1/2x1 1/2x1/4"	17.25"	A709 Gr. 36
	cp	1	.25" THICK END CAP PLATE	18.5"ø	A709 Gr. 36
	t2	1	.50"ø HEX BOLT	1.5"	A307
	nt	1	.50"ø HEX NUT	---	A563
	w	1	.50"ø GALVANIZED WASHER	---	F844
	rw	1	.50"ø RUBBER WASHER	---	50 DURO. NEOPRENE
	gt	1	.125" THICK NEOPRENE GASKET	18.5"ø	50 DURO. NEOPRENE
	gn	1	.50"ø HEX NUT	---	A563
		1	BASE PLATE ASSEMBLY		
	bp	1	2.25" THICK BASE PLATE	3'-0"ø	A709 Gr. 50
	an	8	2.25"ø ANCHOR BOLT	8'-0"	STAINLESS STEEL TYPE 304
	w2	16 8	2.25"ø WASHER	---	STAINLESS STEEL TYPE 304
	nt	8	2.25"ø HEAVY HEX NUT	---	M292 Gr 8
	ln	8	2.25"ø LEVELING NUT	---	M292 Gr 8
	lw	8	2.25"ø LOCK WASHER	---	STAINLESS STEEL TYPE 304
	ap	8	4"x4"x1" plate	---	A709 Gr. 50
		2	HAND HOLE		
	r3	2	0.625"x2.5" FLAT BAR	1'-9.50"	A709 Gr. 36
	r4	2	0.25"x5.5" COVER PLATE	8"	A709 Gr. 36
	n4	2	0.125"x5.25" GASKET	7.75"	NEOPRENE
	cb1	8	.375"ø HEX BOLE	1"	A563
			SIGN ASSEMBLY		
	v1	2	W6x8.5 VERTICAL SIGN HANGER	6'-0"	A709 Gr. 36
	v2	4	W6x8.5 VERTICAL SIGN HANGER	9'-6"	A709 Gr. 36
	v3	4	W6x8.5 VERTICAL SIGN HANGER	7'-6"	A709 Gr. 36
	u2	20	.50"ø U-BOLT	6.5"	F1554 Gr 36
	lk1	40	.50"ø SELF LOCKING HEX NUT	---	A563DH
	wr	40	.50"ø FLAT WASHER	---	F436

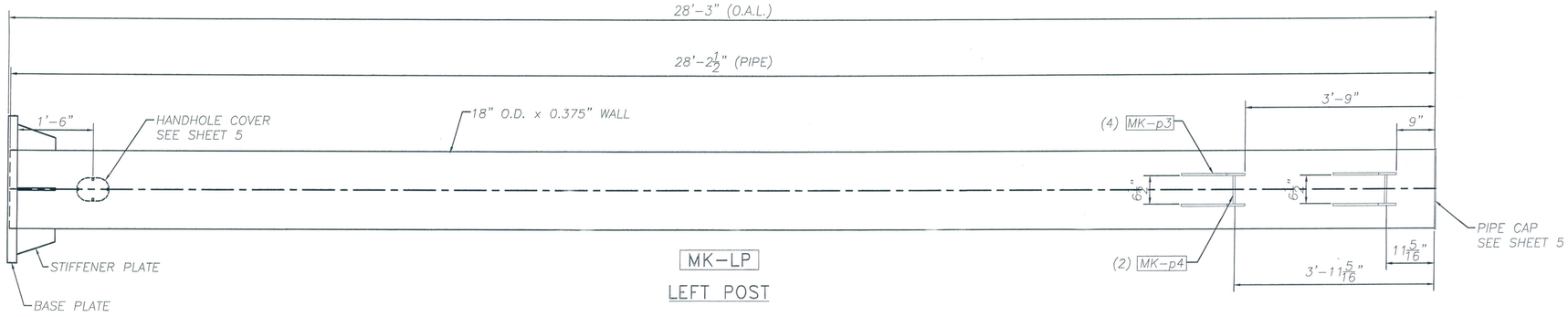

MK-LP

LEFT POST

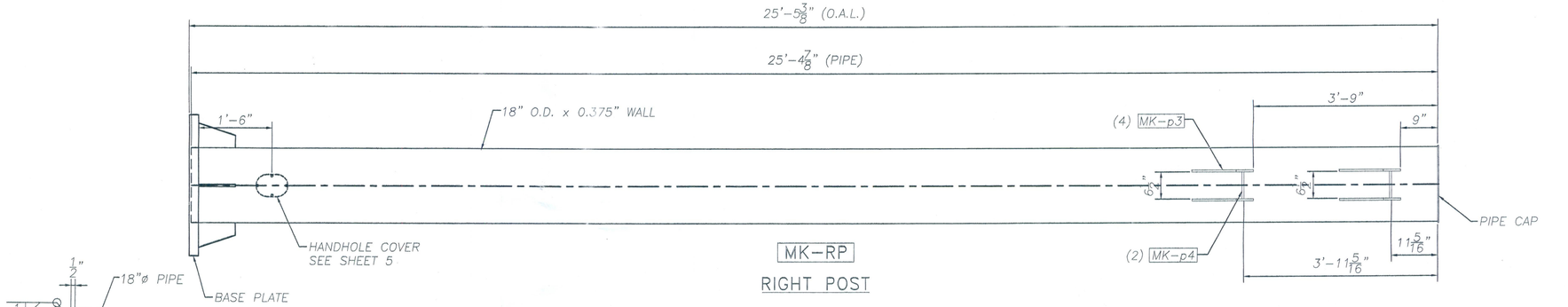

MK-RP

RIGHT POST

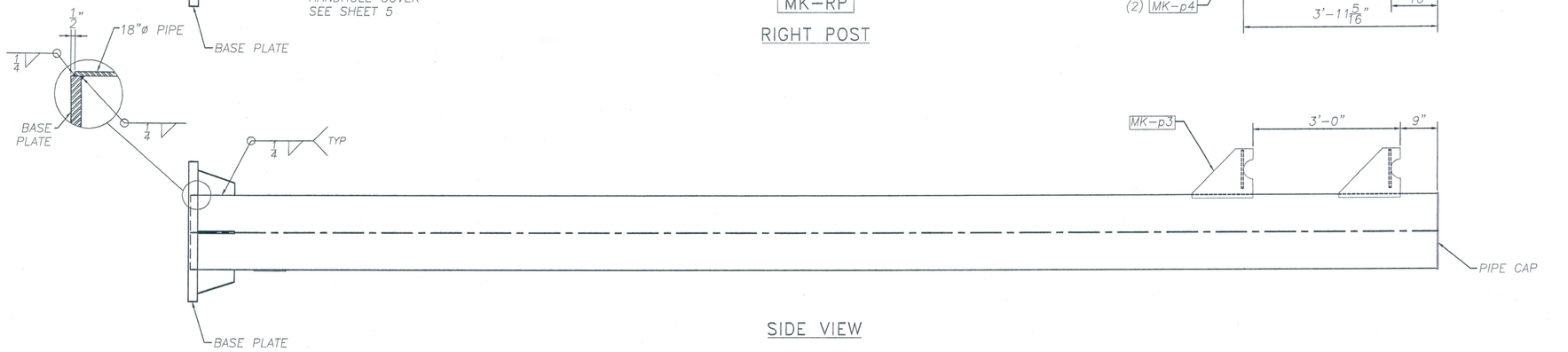

SIDE VIEW

REVISIONS		
No.	Remarks	Date
0	Initial submittal	

RECEIVED
CK'D BY _____ CK'D BY _____
SEP 05 2006
RESUBMIT _____ APPROVED As Noted
BY WJ DATE 9/6/06

HIGHWAY SAFETY CORP.
GLASTONBURY, CT

TRI-CHORD SIGN STRUCTURE
I-89 SB EXIT 14W RAMP "C"
CHITTENDEN COUNTY, VERMONT
CITY OF SOUTH BURLINGTON
PROJECT No. ACIM 089-3(37)

GENERAL CONTRACTOR

SUB CONTRACTOR F.R. LAFEYETTE

DRAWN MHM
CHECKED
DATE 8/29/06
SCALE N.T.S.
HSC REFERENCE NO. 1557
SIZE D REVISION 0
SHEET NO. 9 of 10

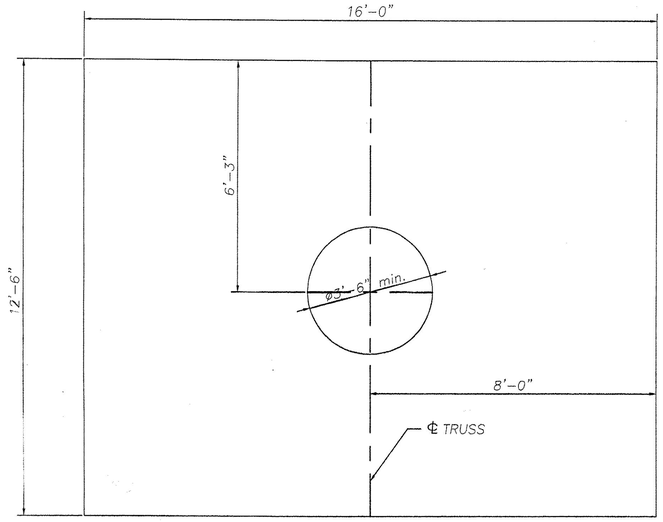

PLAN

REBAR LIST

REBAR	PCS. REQRD.	LENGTH
#4	44	12'-0"
#4	6	10'-5"
#5	36	15'-6"
#5 (HOOK ONE END)	24	8'-6"

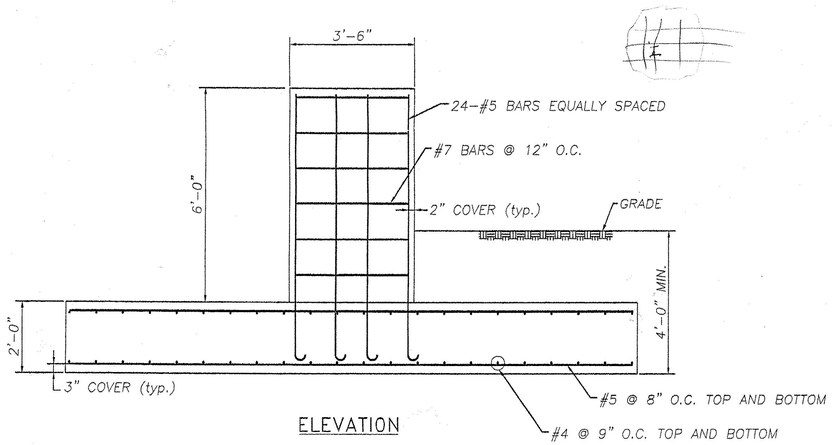

ELEVATION

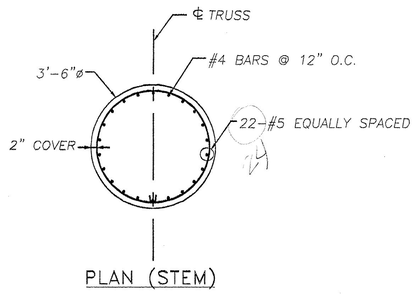

PLAN (STEM)

REVISIONS		
No.	Remarks	Date
0	Initial submittal	

RECEIVED
CK'D BY _____ CK'D BY _____
SEP 05 2006
RESUBMIT _____ APPROVED ✓
BY _____ DATE 9/6/06

HIGHWAY SAFETY CORP.
GLASTONBURY, CT

TRI-CHORD SIGN STRUCTURE
I-89 SB EXIT 14W RAMP "C"
CHITTENDEN COUNTY, VERMONT
CITY OF SOUTH BURLINGTON
PROJECT No. ACIM 089-3(37)

GENERAL CONTRACTOR

SUB CONTRACTOR F.R. LAFEYETTE

DRAWN MHM
CHECKED
DATE 8/29/06
SCALE N.T.S.
HSC REFERENCE NO. 1557
SIZE D REVISION 0
SHEET NO. 10 of 10