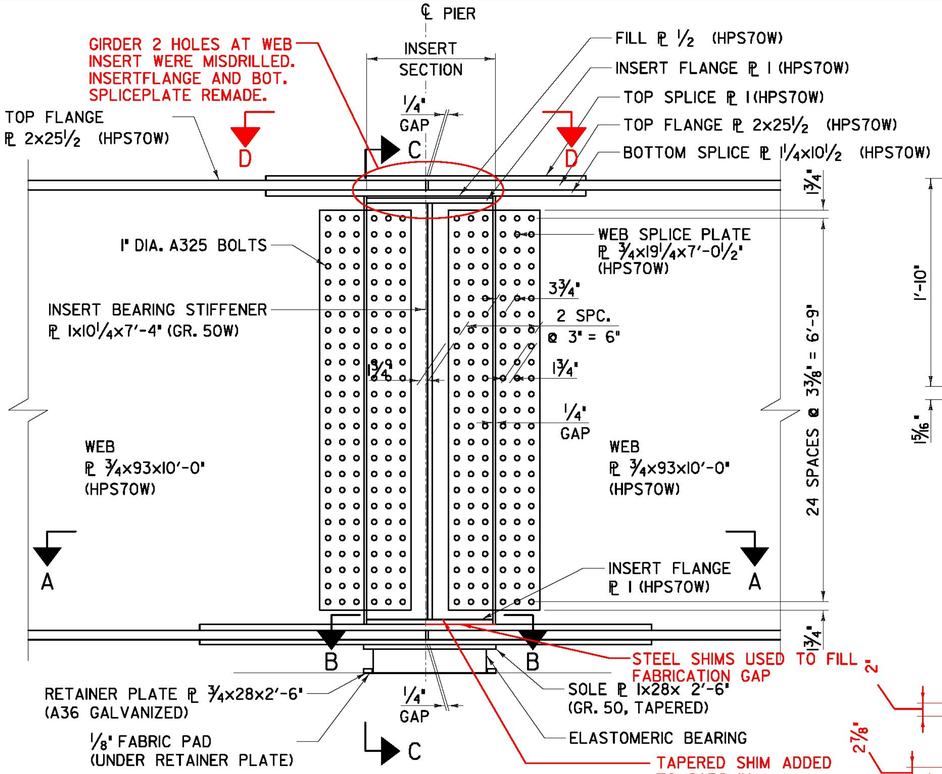

GIRDER SPLICE @ PIER

SCALE: ¾"=1'-0"

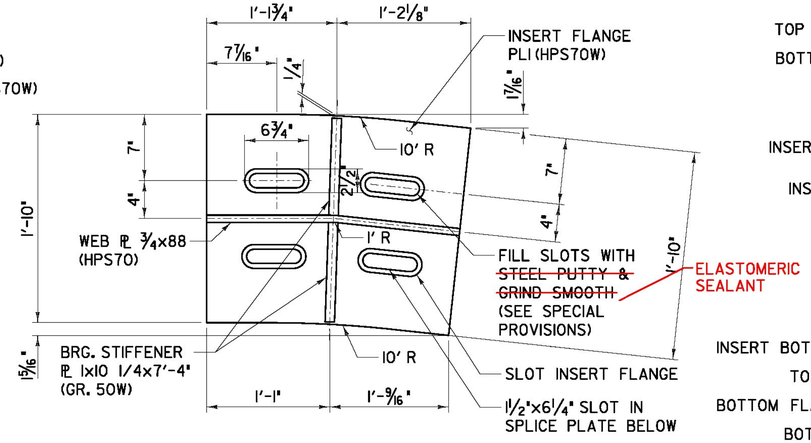

SECTION B-B

SCALE: 1½"=1'-0"

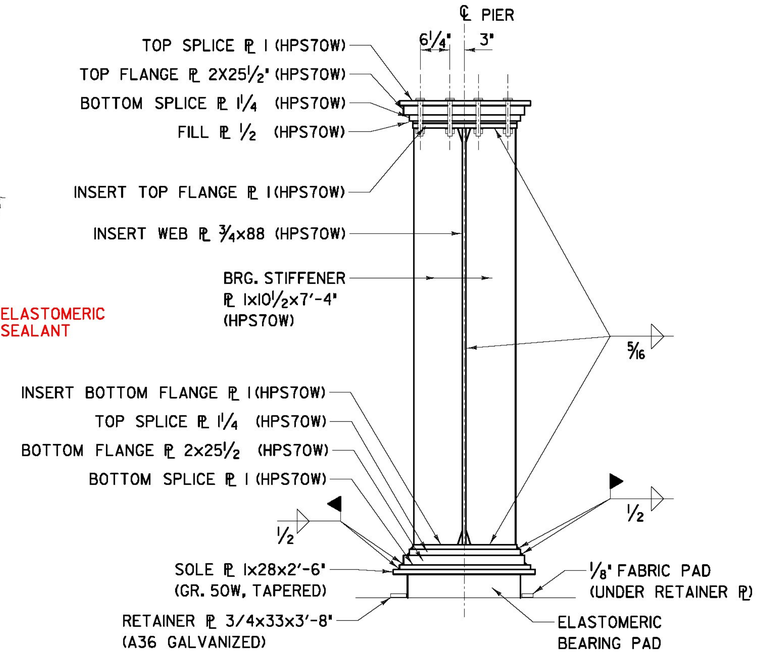

SECTION C-C

SCALE: ¾"=1'-0"

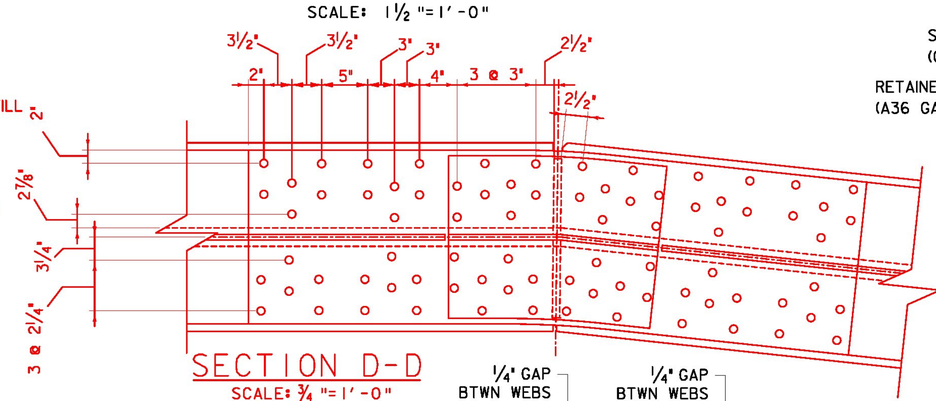

SECTION D-D

SCALE: ¾"=1'-0"

- EDGE WELDS THAT CONNECT TO BOTTOM FLANGE START 1" FROM END OF FLANGE OR CHAMFER
- ** WELD TO SOLE PLATE OR INSERT FLANGE ARE CENTERED ON BOTH

NOTE:

1. BOLT THREADS SHALL NOT BE PERMITTED WITHIN THE SHEAR PLANES OF CONNECTED MATERIAL.

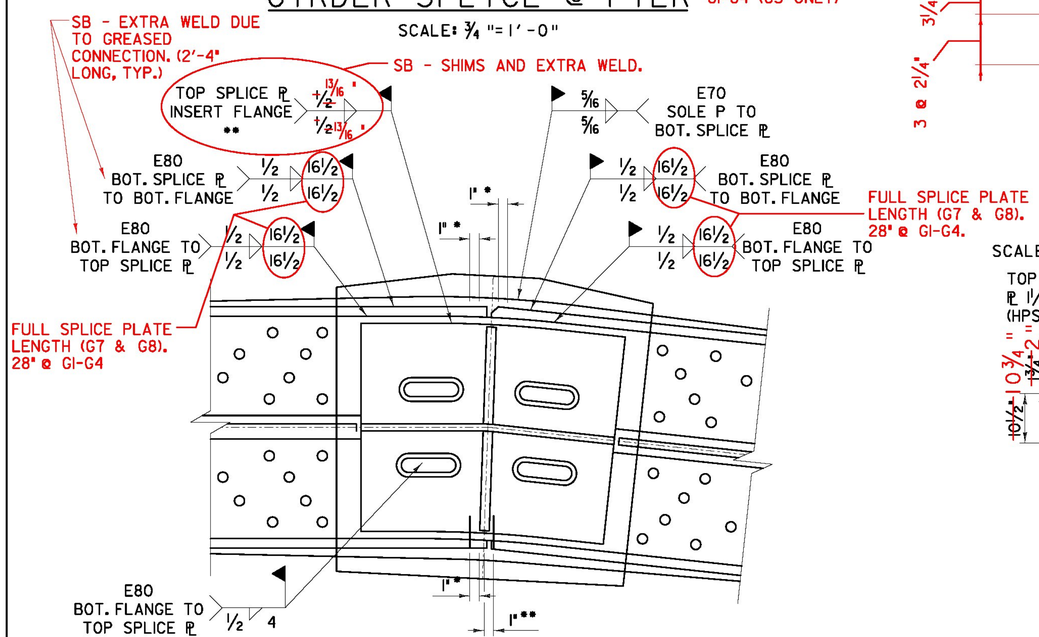

FIELD WELD DETAIL

SCALE: 1½"=1'-0"

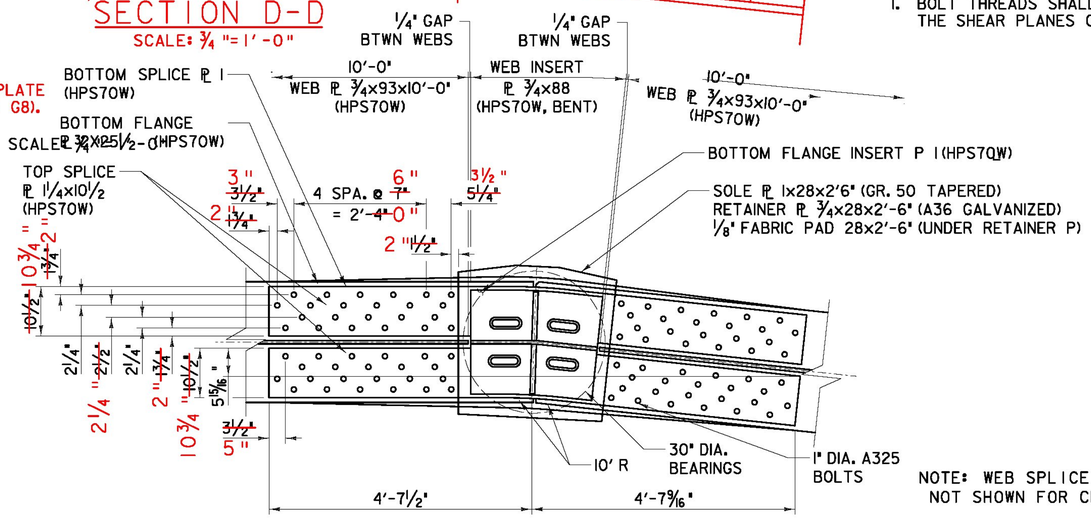

SECTION A-A

SCALE: ¾"=1'-0"

AS BUILT RECORD PLANS

NOTE: WEB SPLICE PLATES NOT SHOWN FOR CLARITY

PROJECT NAME:	BRATTLEBORO
PROJECT NUMBER:	IM 091-1(50)

BECK & BELLUCCI, INC. | T.Y.LIN INTERNATIONAL

FILE NAME: ZB-100-BR6-408.dgn	PLOT DATE: 5/15/2013
PROJECT LEADER: Phillip E. Kendall P.E.	DRAWN BY: S. A. Morgan
DESIGNED BY: Joseph Krajewski P.E.	CHECKED BY: Mike Lopez
STEEL DETAILS 3 OF 5	SHEET ZB-100-BR6-408