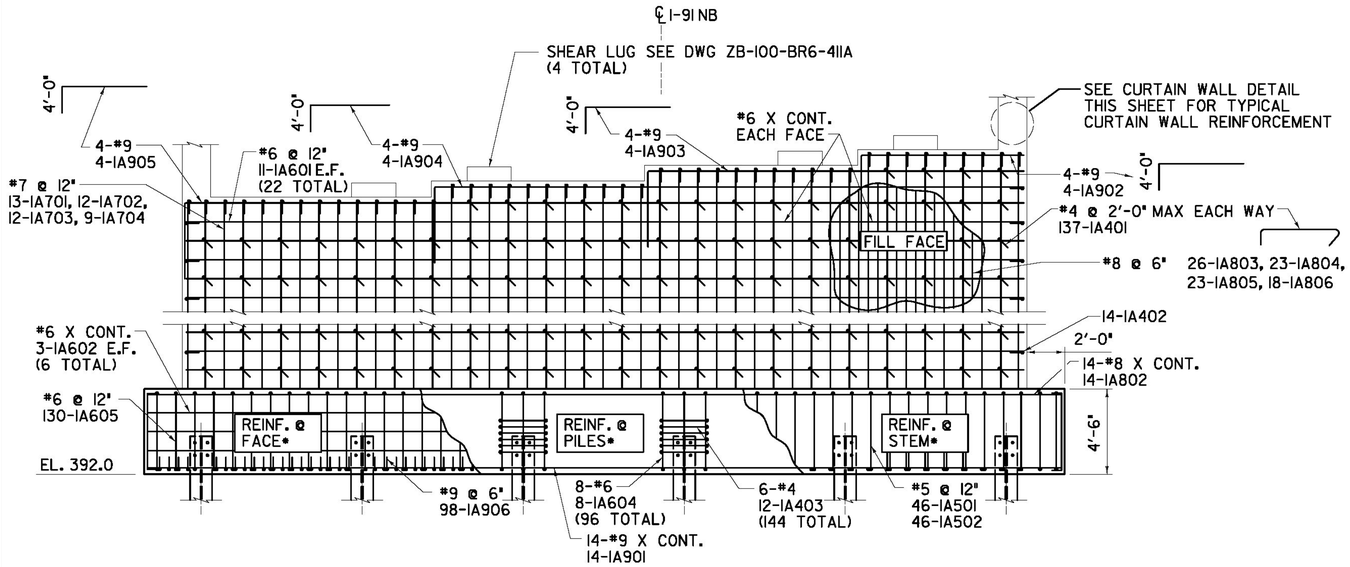

*ALL OTHER REINFORCEMENT NOT SHOWN, SEE TYPICAL SECTION FOR MORE DETAIL

ABUTMENT #1 - FOOTING ELEVATION

(LOOKING BACK ON STA.)
SCALE: 1/4 "= 1'-0"

NOTES:

1. SEE SUPERSTRUCTURE DRAWINGS FOR BACKWALL REINFORCEMENT AND DETAILS

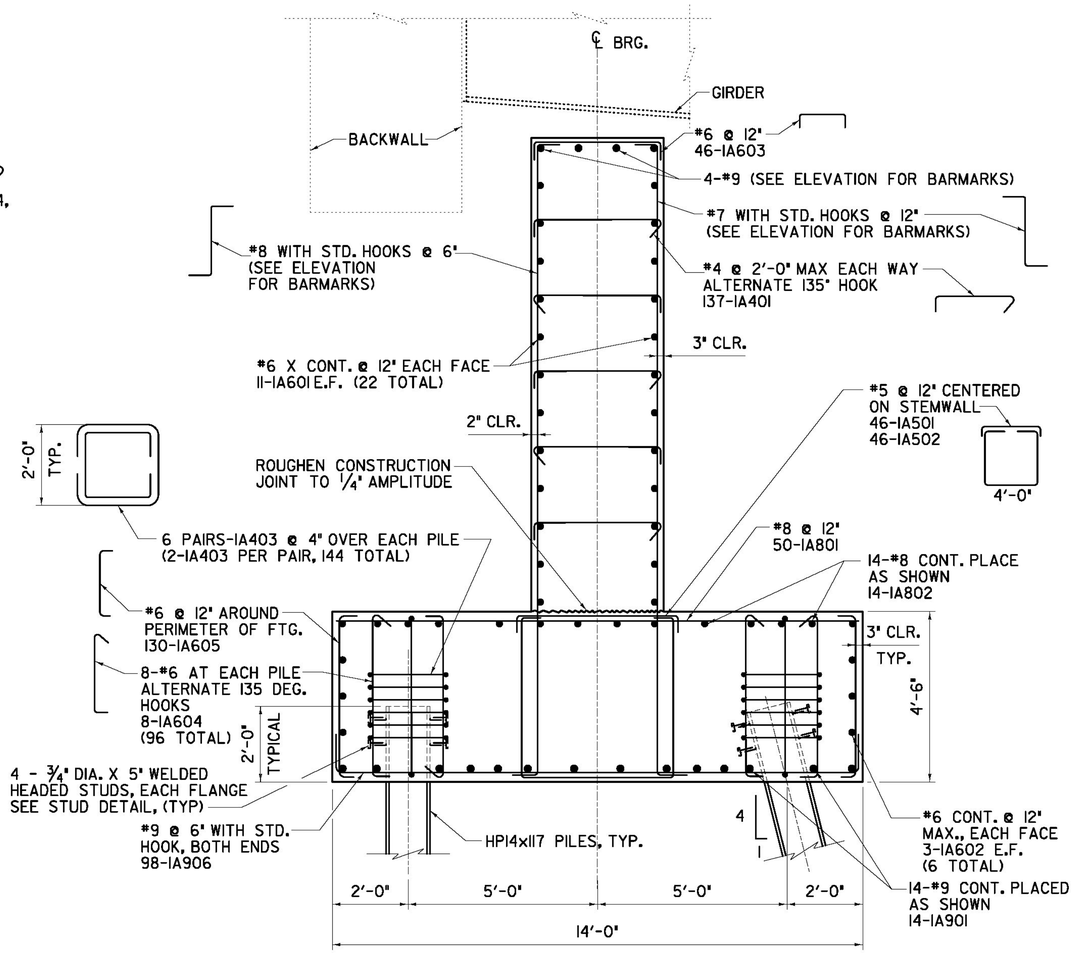

TYPICAL SECTION

SCALE: 1/2 "= 1'-0"

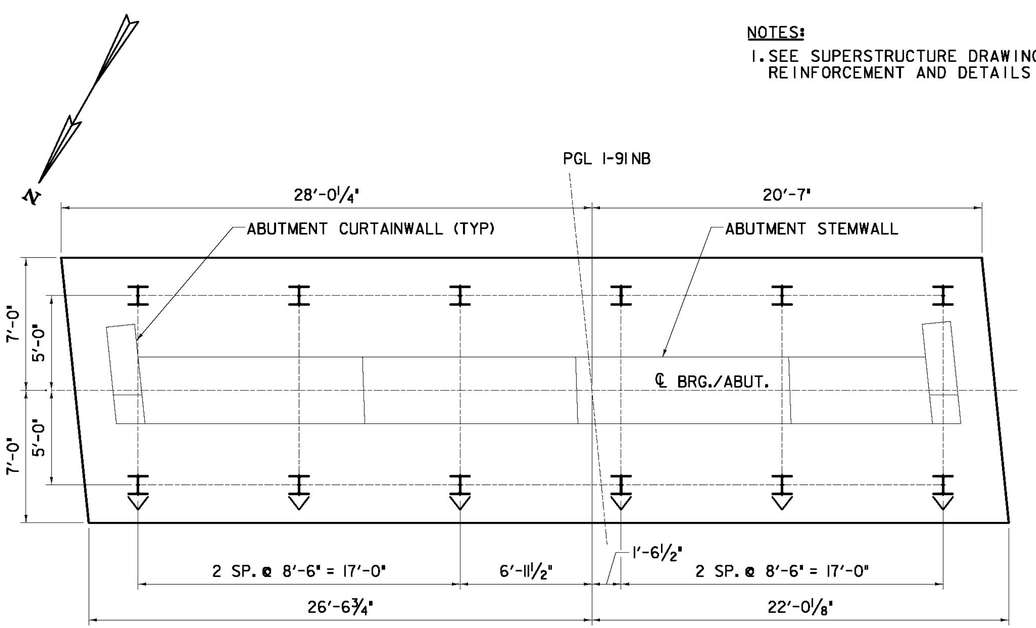

ABUTMENT #1 - FOUNDATION PLAN

SCALE: 1/4 "= 1'-0"
(WINGWALL FOUNDATIONS NOT SHOWN)

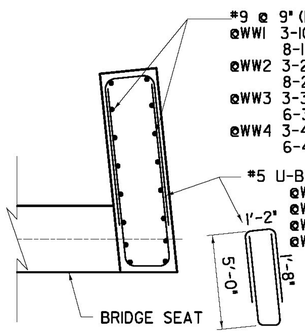

SECTION A-A

SCALE: 1/2 "= 1'-0"

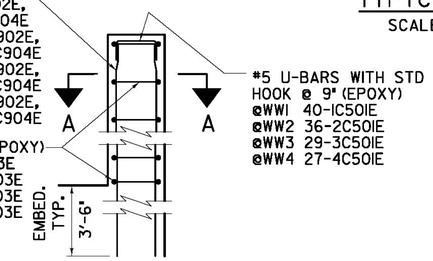

CURTAIN WALL DETAIL

SCALE: 1/2 "= 1'-0"

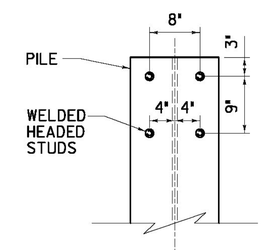

STUD DETAIL

SCALE: 1 "= 1'-0"

AS BUILT RECORD PLANS

BENT BAR NOT SHOWN:
@WW1 3-1C502E
@WW2 3-2C502E
@WW3 3-3C502E
@WW4 3-4C502E

RFC PLANS - WORK PACKAGE #4
BRIDGE 6N SUBSTRUCTURE
JULY 6, 2011

PROJECT NAME:	BRATTLEBORO
PROJECT NUMBER:	IM 091-1(50)

BECK & BELLUCCI, INC. | T·Y·LIN INTERNATIONAL

FILE NAME: ZB-100-BR6-305.dgn	PLOT DATE: 7/20/2011
PROJECT LEADER: Brian W. Clogston P.E.	DRAWN BY: DGA
DESIGNED BY: Mike Lopez, P.E.	CHECKED BY: J.England, P.E.
BR 6N - ABUT 1 FOOTING REINFORCEMENT	SHEET ZB-100-BR6-305