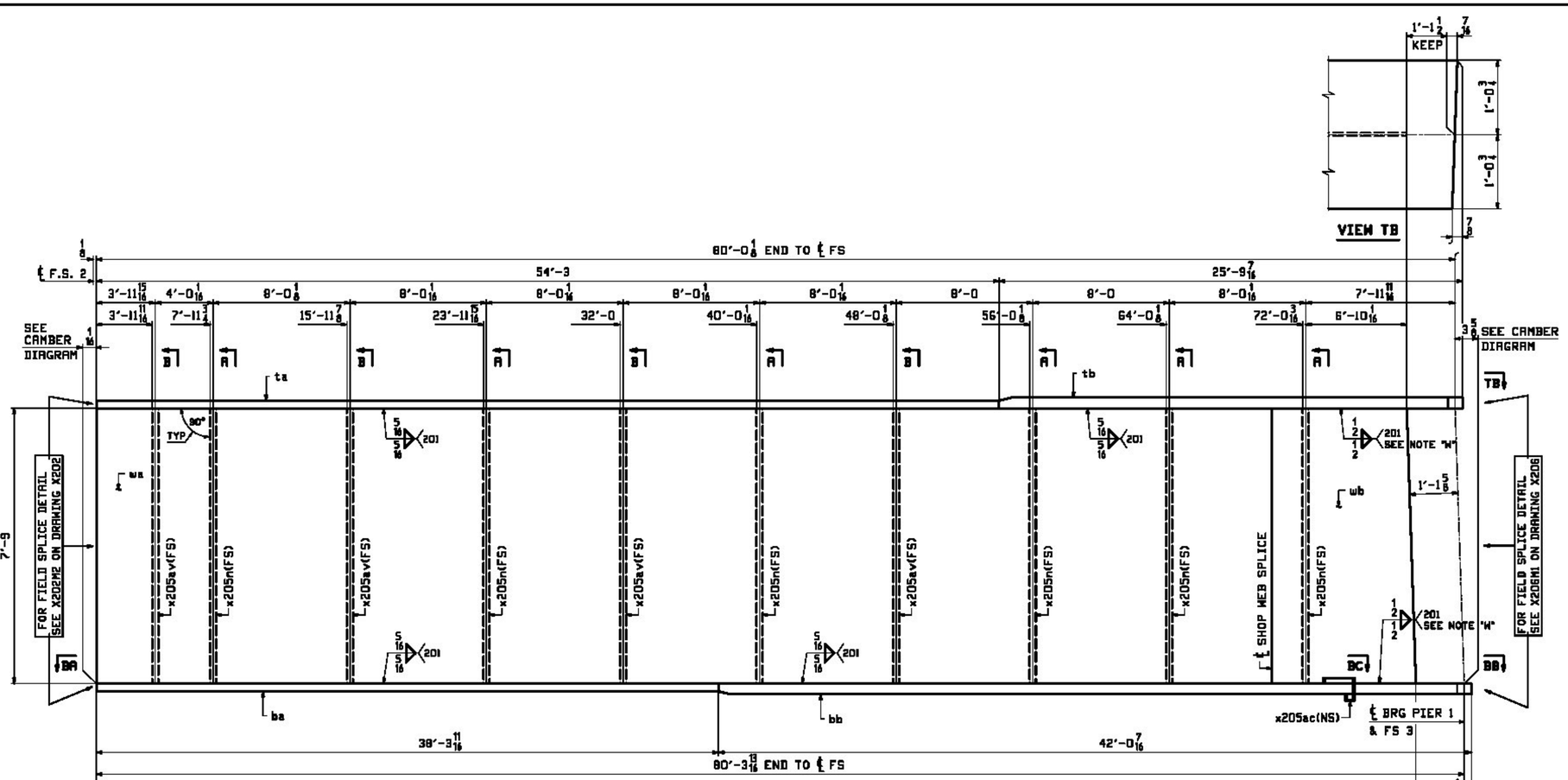


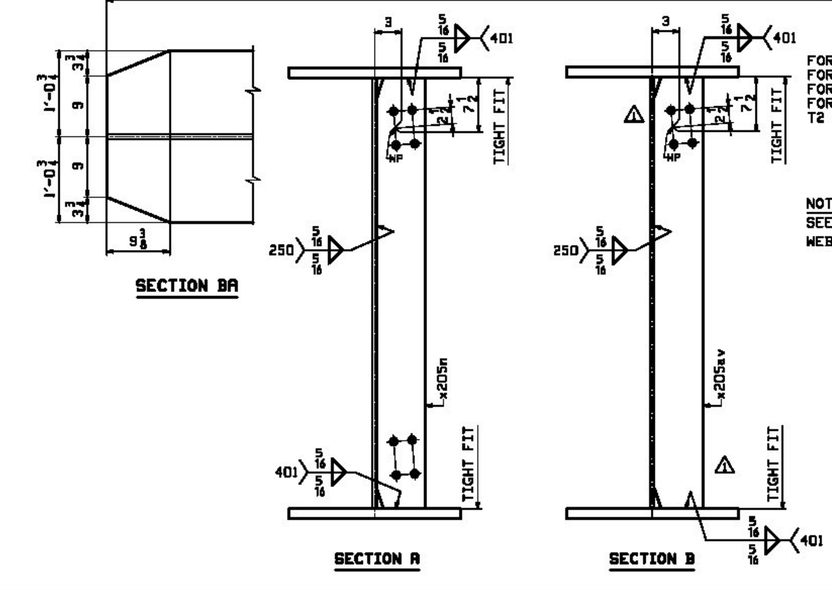


## ONE - GIRDER - 212G4C

FOR FIELD SPLICE STANDARD DETAILS SEE DRAWINGS X202 & X206.
FOR GIRDER STANDARD DETAILS SEE DRAWING X205.
FOR CAMBER & FLANGE DIAGRAMS SEE DRAWING C203.
FOR GENERAL NOTES SEE DRAWING GN1.
T2 DENOTES MATERIAL SUBJECT TO CHARPY V-NOTCH TESTING.

NOTE "W"
SEE DETAIL "G4C" ON DRAWING C203 FOR
WEB TO FLANGE WELD SIZE TRANSITION LOCATIONS.

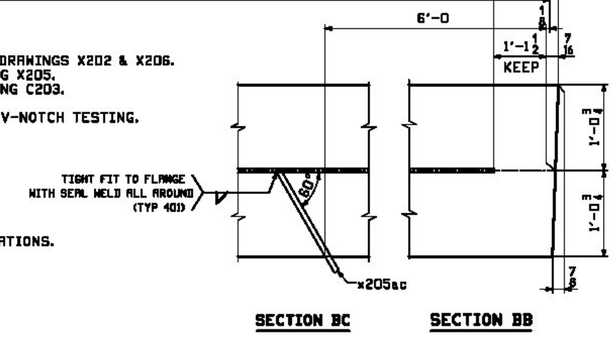


| FOR INFO PAGE | FOR INFO LINE | SHOP MARK | QTY | MARK | MATERIAL | LENGTH FT | LENGTH INCHES | REMARKS | WT | PROCUREMENT NOTES |
|---|---|---|---|---|---|---|---|---|---|---|
| | | 212G4C | 1 | | GIRDER | | | | 40848 | |
| 203 | N | | 1 | wa | PL 5/8x93 | 68 | 10 5/64 | M270-50WT2 | | |
| 202 | L | | 1 | wb | PL 3/4x93 | 10 | 3 5/8 | M270-HPS70WT2 | | |
| 202 | Q | | 1 | ta | PL 1 1/2x25 1/2 | 54 | 3 | M270-50WT2 | | |
| 201 | G | | 1 | tb | PL 2x25 1/2 | 25 | 9 7/16 | M270-HPS70WT2 | | |
| 201 | N | | 1 | ba | PL 1 1/2x25 1/2 | 38 | 3 11/16 | M270-HPS70WT2 | | |
| 201 | R | | 1 | bb | PL 2x25 1/2 | 42 | 0 7/16 | M270-HPS70WT2 | | |
| 209 | Q | | 4 | x205av | PL 1/2x7 1/4 | 7 | 9 | M270-50W | | |
| 209 | E | | 6 | x205n | PL 1/2x7 1/4 | 7 | 9 | M270-50W | | |
| 208 | N | | 1 | x205ac | PL 1/4x4 | 1 | 4 7/16 | M270-50W | | |

BILL OF MATERIAL — JOB NO. 479 — DRAWING NO. 212 — REV. 1

No Exception Taken
Make Correction as Noted
Submit Specified Item
Revise and Resubmit as Noted
Rejected

T-Y-LIN INTERNATIONAL

Checking is for general compliance with the design concept of the project and general compliance with the information given in the contract documents only. Any action shown is not an approval and is subject to the requirements of the plans and specifications. Any notion shown on a specific item shall not indicate the checking of an assembly of which the item is a component. Contractor is solely responsible for: dimensions which shall be confirmed and correlated at the job site, fabrication processes, techniques of construction, safety precautions; and coordination of its work with that of all other trades and the satisfactory performance of its work.

Reviewed By: _____ Date: May 29, 2012

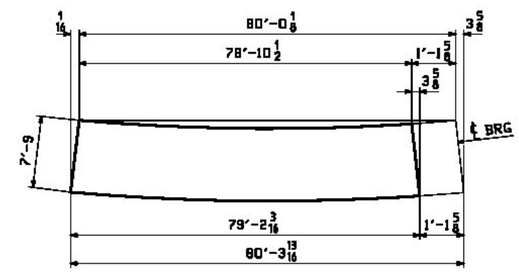


ORIENTATION DIAGRAM
FOR CAMBER SEE DRAWING C203

| REV. | DATE | REMARKS | DWN | CHK | APVL | SHOP |
|---|---|---|---|---|---|---|
| 1 | 5/10 2012 | REV. UTILITY STIFF'S (SECTION B) (EXTRA-TEC-3DS4001) | JTB | TJB | | |
| 0 | | | | | | |

| MATERIAL: | SURFACE PREP. & PAINT: | HOLES: | SHOP BOLTS: |
|---|---|---|---|
| M270-50W (UN) | SEE DWG GN1 | 15/16" ø | NONE |

DESCRIPTION: GIRDER - 212G4C


CASCO BAY STEEL STRUCTURES, INC.
1 WALLACE AVE.
SOUTH PORTLAND, ME 04106
PHONE (207) 780-6722
FAX. (207) 780-6726


| | | | |
|---|---|---|---|
| STRUCTURE: I-91 BRIDGE 65 OVER WHITESTONE BROOK & WILLIAMS STREET COUNTY OF WINDHAM | | DRAWN: JTB | DATE: 07/11 |
| | | CHKD: TJB | DATE: 07/23 |
| LOCATION: | Town of Brattleboro, VT. | JOB NO. | DWG NO. |
| PROJ NO. | IM 091-1(50) | 479 | 212 |
| CUSTOMER: | BECK & BELLUCCI | | REV. 1 |