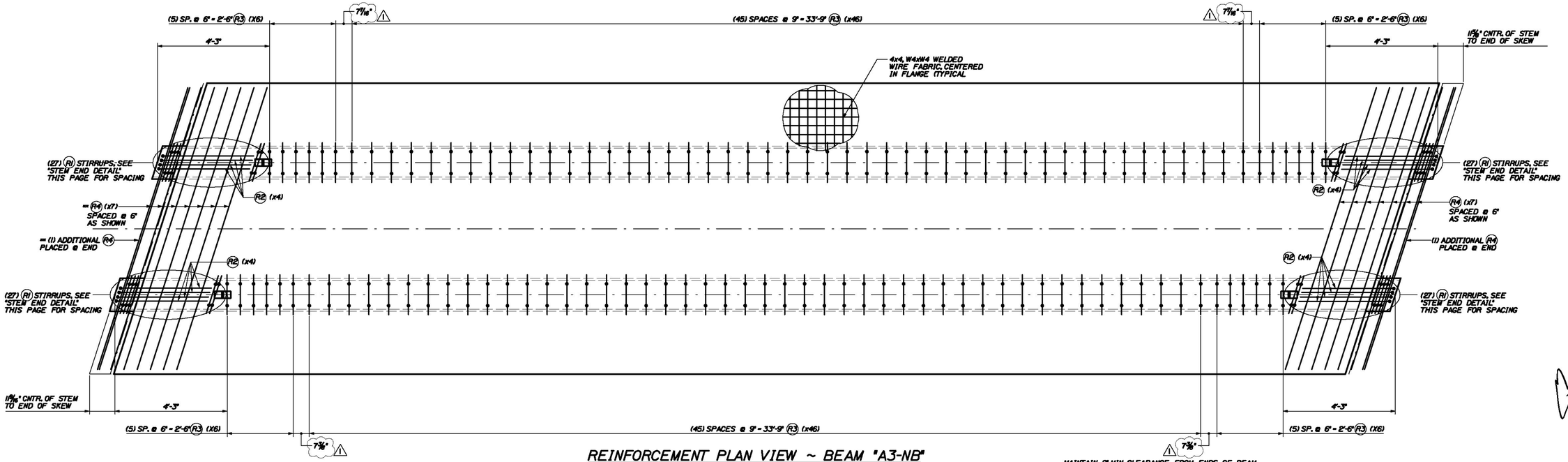

REINFORCEMENT PLAN VIEW ~ BEAM "A3-NB"

SCALE: 1/2" = 1'-0"

MAINTAIN 2" MIN. CLEARANCE FROM ENDS OF BEAM.

SEE REINFORCEMENT SECTION & END VIEWS (THIS SHEET) FOR ALL DIMENSIONS AND DETAILS NOT SHOWN HERE.

= FLANGE REINFORCEMENT IN AREA OF FLANGE BLOCK-OUT TO BE PLACED DURING CONSTRUCTION (TYPICAL @ EACH END OF BEAM)

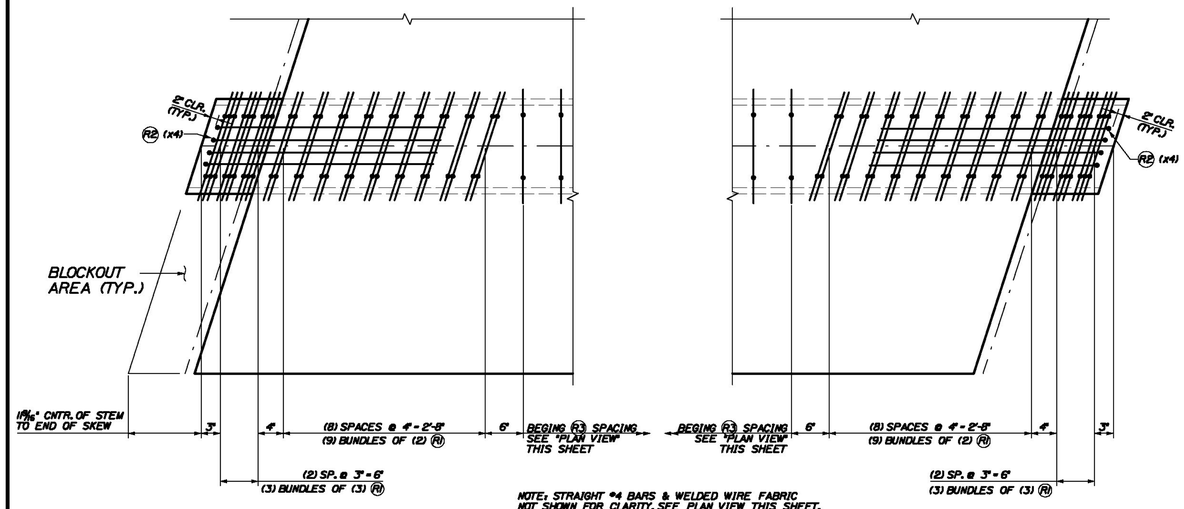

NOTE: STRAIGHT #4 BARS & WELDED WIRE FABRIC NOT SHOWN FOR CLARITY, SEE PLAN VIEW THIS SHEET.

STEM END DETAIL

SCALE: 1" = 1'-0"

Add notes or diagrams that show required strand projections as shown in the design drawings on sheet 406, note 1

STRAND LEGEND
0.6" FULLY TENSIONED STRAND
0.6" ϕ FULLY TENSIONED STRAND (DEBOUND 0.50 FEET)
0.6" ϕ FULLY TENSIONED STRAND (DEBOUND 5.75 FEET)
0.6" ϕ FULLY TENSIONED STRAND (DEBOUND 8.75 FEET)

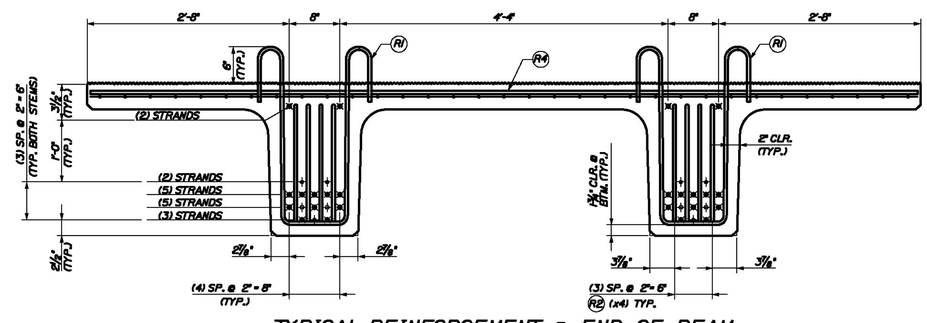

TYPICAL REINFORCEMENT @ END OF BEAM

SCALE: 1" = 1'-0"

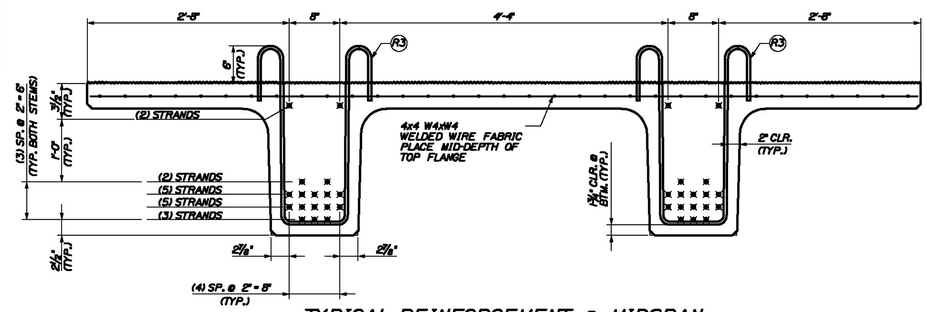

TYPICAL REINFORCEMENT @ MIDSPAN

SCALE: 1" = 1'-0"

REINFORCING CHART					
ITEM	QTY.	TOTAL	SIZE	TYPE	LENGTH
R1	108	108	4	BENT	6'-8"
R2	16	16	4	BENT	8'-5 1/4"
R3	116	116	4	BENT	6'-7 1/2"
R4	16	16	4	STRT.	11'-2 1/2"
—	515 s.f.	515 s.f.	4x4, D4xD4 WELDED WIRE FABRIC		

BAR SIZE	WT./BEAM	TOTAL WT.
4	1275	1275
WWF	440	440

NOTES:

BENT BAR LENGTHS SHOWN REPRESENT BAR LENGTHS BEFORE BENDING.

TENSION LOAD = 43.94 KIPS/ STRAND
STRAND: .6 ϕ, 270 KSI LOW RELAXATION, ASTM M203
REBAR: AASHTO M31, GRADE 60, EPOXY COATED
ALL TOLERANCES TO PCI STANDARDS

(1) "A3-NB" NEXT BEAM BEAM REQUIRED

SEE SHEET #7 FOR GEOMETRIC DETAILS

SEE SHEET #2 FOR BENT REBAR DETAILS

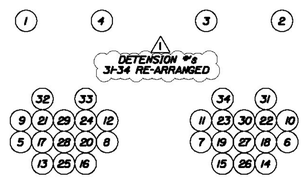

DE-TENSION SEQUENCE

N.T.S.

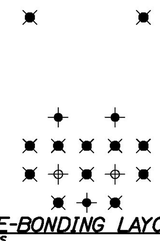

DE-BONDING LAYOUT

N.T.S.
TYPICAL EACH STEM

THE PROFESSIONAL ENGINEER'S STAMP CERTIFIES ONLY THAT THESE DRAWINGS WERE PREPARED UNDER THE DIRECT SUPERVISION OF A REGISTERED PROFESSIONAL ENGINEER AND ONLY WHEN SIGNED AND DETAILS SHOWN ON THE CONTRACT DRAWING UNLESS REQUESTED OTHERWISE.

STATE OF VERMONT
ERIC T. CALOS
NO. 8747
Structural
LICENSED
PROFESSIONAL ENGINEER

CONTRACTOR: BECK & BELLUCCI, INC.

PROJECT: BRATTLEBORO, VERMONT
IM 019-1(50)

W.E. DAILEY INC.
PRECAST CONCRETE PRODUCTS
3 AIRPORT ROAD, BRATTLEBORO, VT 05302
TEL: (802) 742-4416 FAX: (802) 742-2719
DATE: 1/4/2011 REVISIONS: 2 INITIAL SUBMISSION
DRAWN BY: DRAFTER: ENG.

I-91 BRATTLEBORO, VERMONT
OVER MAPLE ST.

BEAM TYPE "A3-NB"
REINFORCEMENT DETAILS

SHEET NUMBER
8

Filename: ...\008_Beam_A3-NB_Reinf.dgn Workgroup: Structures Division Username: common Date: 7/20/2011