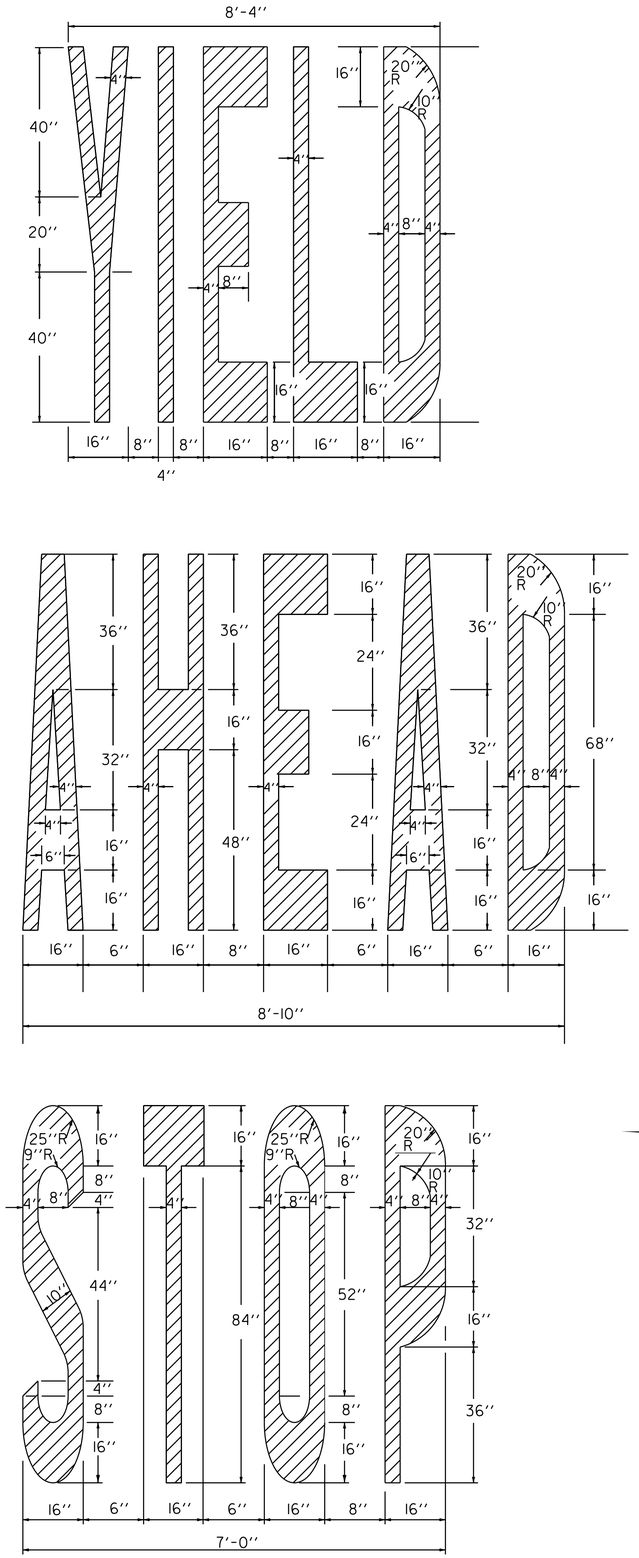

PAVEMENT MARKING DETAILS

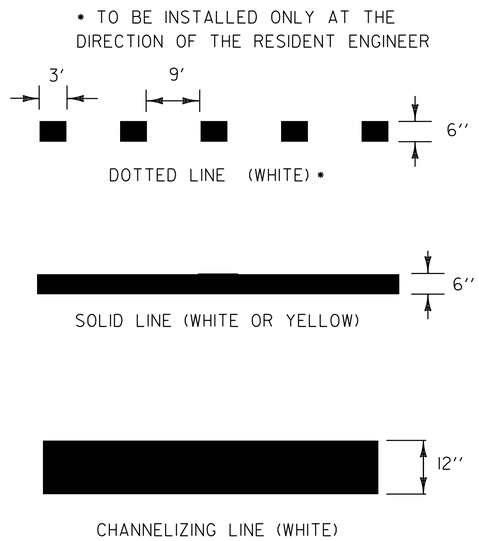

PAVEMENT MARKING LINE DETAILS

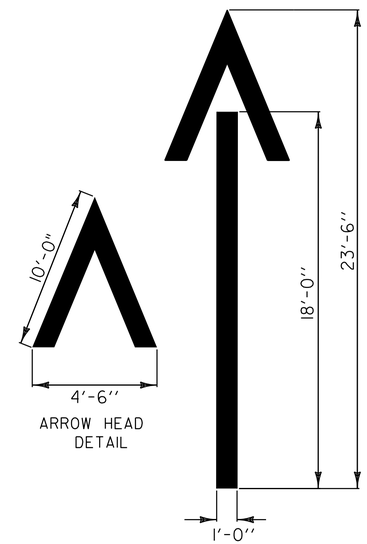

WRONG-WAY ARROW DETAILS

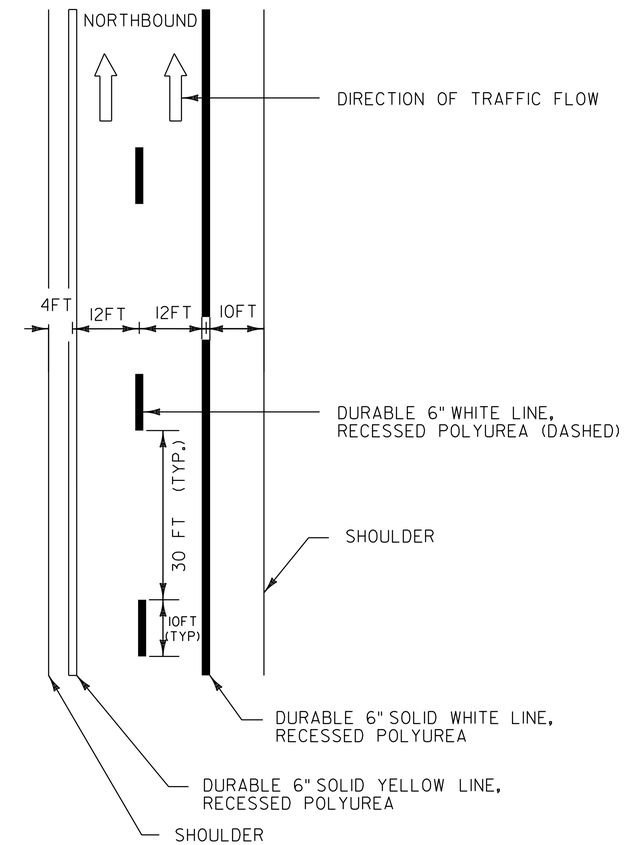

TYPICAL MAINLINE MARKING PLAN

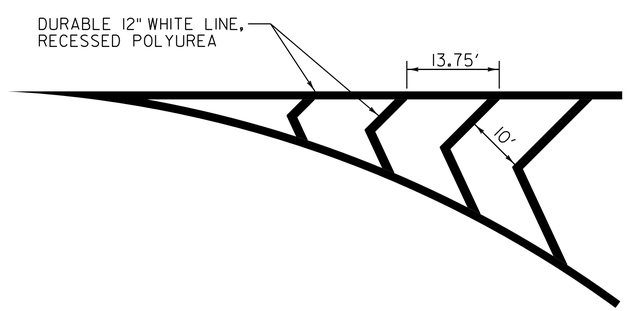

GORE MARKING DETAIL

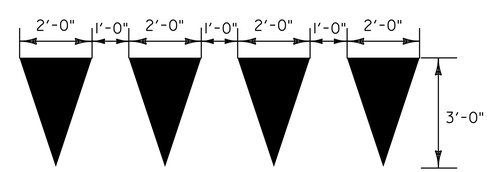

YIELD LINE DETAILS

TO BE INSTALLED ONLY AT THE DIRECTION OF THE RESIDENT ENGINEER
TO BE PAID AS ONE LETTER OR SYMBOL PER TRIANGLE

NOT TO SCALE

TYPICAL PAVEMENT MARKINGS SHEET

PROJECT NAME: WESTMINSTER-SPRINGFIELD
PROJECT NUMBER: IM 091-1(62)

FILE NAME: /pave/01a014/pa014
PROJECT LEADER: PTS
DESIGNED BY: NLL
IPARM FILE NAME: 01a014_09

PLOT DATE: 17-JAN-2013 12:43
DRAWN BY: JBZ
CHECKED BY: PTS
SHEET 9 OF 43