ONE WAY RAMP TYPICAL SECTIONS
CHITTENDEN COUNTY CIRCUMFERENTIAL HIGHWAY

		ITEM NUMBERS
PAVEMENT:	6" BITUMINOUS CONCRETE PAVEMENT 1-1/4" TYPE III WEARING COURSE 1-3/4" TYPE II BINDER COURSE 3" TYPE I BASE COURSE	406.25
SHOULDERS:	1-1/4" TYPE III WEARING COURSE	
ALTERNATE A SHOWN BELOW	30" SUBBASE OF DENSE GRADED CRUSHED STONE	301.35
	18" SAND BORROW	203.31
	4'-0" SHATTERED ROCK (IN ROCK CUT)	

NOTE: ALL FROST SUSCEPTIBLE MATERIAL WITHIN 54" (DESIGN FROST DEPTH) OF FINISH GRADE SHALL BE REMOVED AND REPLACED AS SHOWN

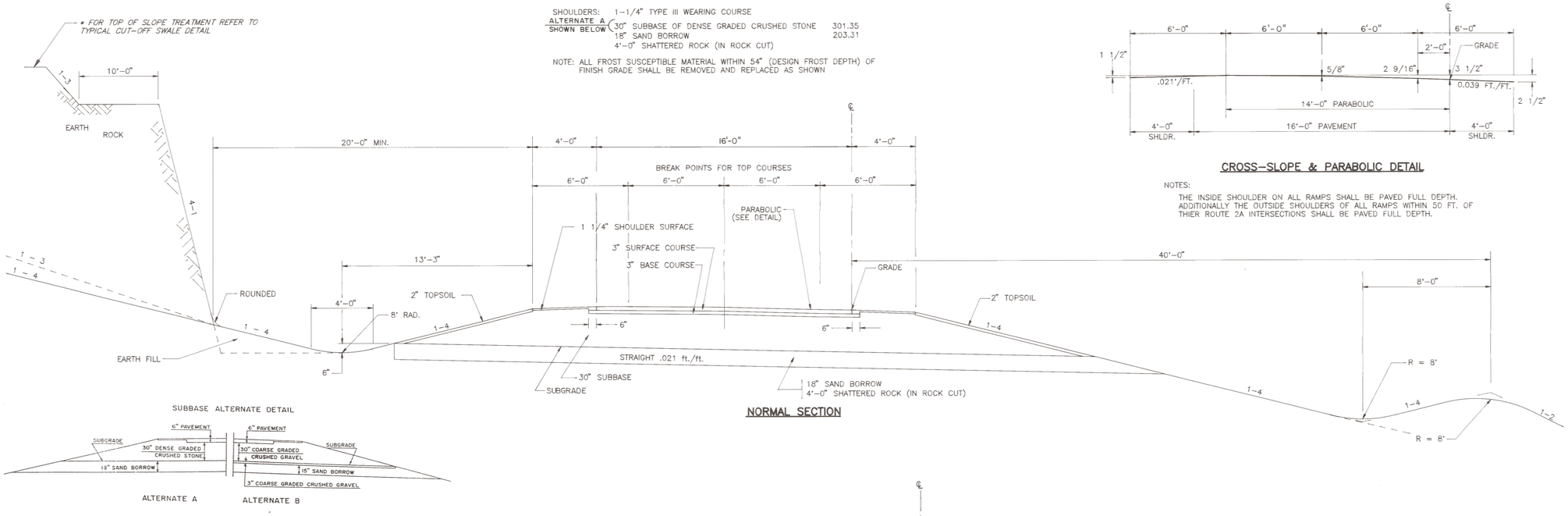

NORMAL SECTION

CROSS-SLOPE & PARABOLIC DETAIL

NOTES:

THE INSIDE SHOULDER ON ALL RAMPS SHALL BE PAVED FULL DEPTH. ADDITIONALLY THE OUTSIDE SHOULDERS OF ALL RAMPS WITHIN 50 FT. OF THIER ROUTE 2A INTERSECTIONS SHALL BE PAVED FULL DEPTH.

SUBBASE ALTERNATE DETAIL

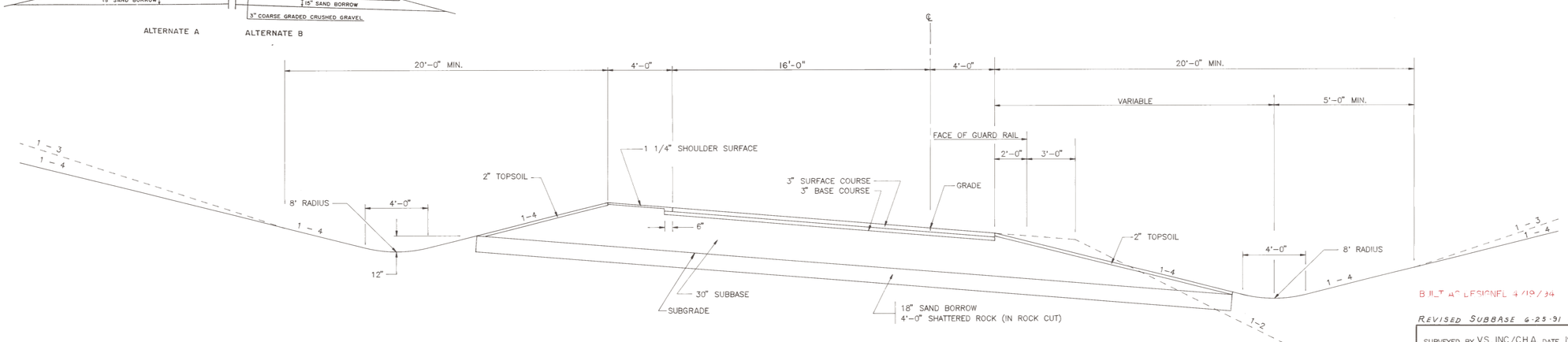

MAXIMUM BANKED SECTION

e=0.080 FT./FT.

BUILT AS DESIGNED 4/19/94

REVISED SUBBASE 6-25-91 DZG

DATUM	
VERTICAL	N.G.V.D. 1929
HORIZONTAL	N.A.D. 1927

SURVEYED BY V.S., INC./C.H.A. DATE 1988-90
DRAWN BY W. PETERSON DATE 5/88
TRACED BY J. LUKOVITS DATE 5/89

VERMONT ROUTE 289 (F.A.P.)
TOWN OF ESSEX
PROJ. WILLISTON-COLCHESTER NO. PB 033-1(2)

SHEET 10 OF 400

CCCHTP6
(CCCHTP8)
(CCCHTP7)