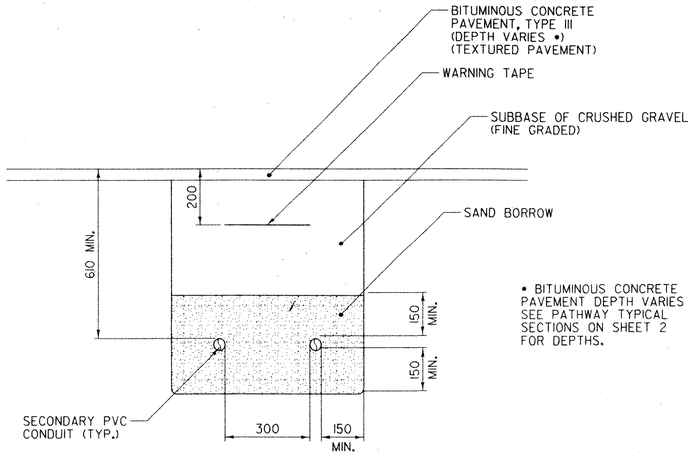


• BITUMINOUS CONCRETE PAVEMENT DEPTH VARIES SEE PATHWAY TYPICAL SECTIONS ON SHEET 2 FOR DEPTHS.

## SECONDARY UNDERGROUND ELECTRICAL TRENCH DETAIL

SCALE 1:10

**NOTE:**

1. REFER TO UTILITY RELOCATION SHEET FOR SIZE AND QUANTITY OF CONDUITS IN TRENCH.

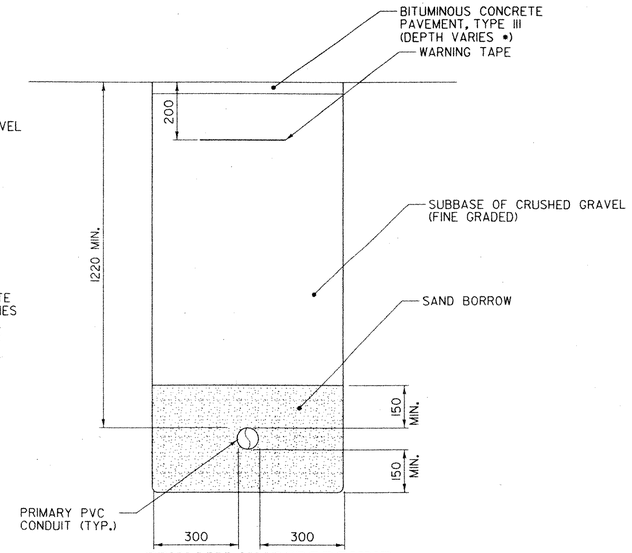


## PRIMARY UNDERGROUND ELECTRICAL TRENCH DETAIL

SCALE 1:10

**NOTES:**

1. REFER TO UTILITY RELOCATION SHEET FOR SIZE AND QUANTITY OF CONDUITS IN TRENCH.
2. PRIMARY CONDUIT RUNS BETWEEN EXISTING POLE NO. 5-1-1 TO THE REPLACED POLE NO. 1C AND TO THE NEW ELECTRICAL CONTROL PANEL, AS SHOWN ON PLANS.

• DIMENSIONS OF GRANITE BLOCK SHOWN ARE APPROXIMATE AND VARY DEPENDING ON ROCK. LENGTH OF EACH BLOCK IS APPROXIMATELY 1.2m - 1.5m. WIDTH OF BLOCKS BETWEEN STATION 1+117.60 TO 1+136.64 MUST ALLOW FOR A MINIMUM PATHWAY WIDTH OF 1.5 METERS, AND THEREFORE THE WIDTH OF BLOCKS MAY BE LESS THAN 600mm WIDE WITHIN THIS SECTION.

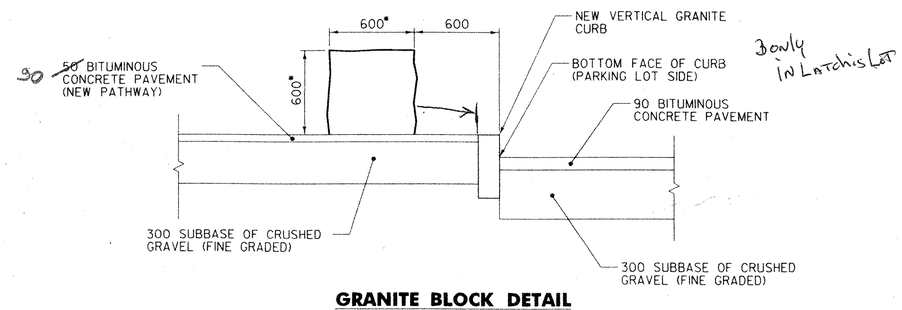


3 only in Lot this Lot

## GRANITE BLOCK DETAIL

SCALE 1:20

**NOTES:**

1. PLANS SHOW SIXTEEN (16) GRANITE BLOCKS. THE TOWN OF BRATTLEBORO CURRENTLY HAS TWELVE GRANITE BLOCKS IN STORAGE TO BE USED FOR THIS PROJECT. IF THESE BLOCKS ARE NOT AVAILABLE AT THE TIME OF THE PROJECT'S CONSTRUCTION, FINAL LOCATION OF THE AVAILABLE BLOCKS SHALL BE APPROVED BY THE TOWN.
2. THE REMAINING FOUR BLOCKS WHICH THE TOWN DOES NOT CURRENTLY HAVE IN STORAGE WILL BE EXCAVATED AS PART OF THIS PROJECT IN THE EXISTING ENTRANCE WAY TO THE BAST PARKING LOT.
3. IF FOUR SUITABLE BLOCKS ARE NOT OBTAINED THROUGH THIS PROJECT THROUGH EXCAVATION IN THE VICINITY OF THE PROPOSED ENTRANCE TO THE BAST PARKING LOT THEN THE TOWN SHALL APPROVE THE FINAL LOCATION OF THE BLOCKS WHICH ARE AVAILABLE FOR THIS PROJECT.
4. THESE BLOCKS ARE TO BE PAID FOR UNDER ITEM 621.85, 'GUIDE POSTS (MOD. - GRANITE BLOCK)'.
5. ALTERATIONS OF THE LOCATIONS OF THESE BLOCKS MAY BE MADE AT THE TOWN'S REQUEST, PRIOR TO PLACEMENT OF THE BLOCKS.
6. CONTRACTOR IS RESPONSIBLE FOR OBTAINING THE TWELVE GRANITE BLOCKS FROM THE TOWN, TRANSPORTING BLOCKS TO THE PROJECT SITE, NECESSARY CLEANING OF THE BLOCKS AND PLACING THE BLOCKS IN THE PROPER LOCATIONS.

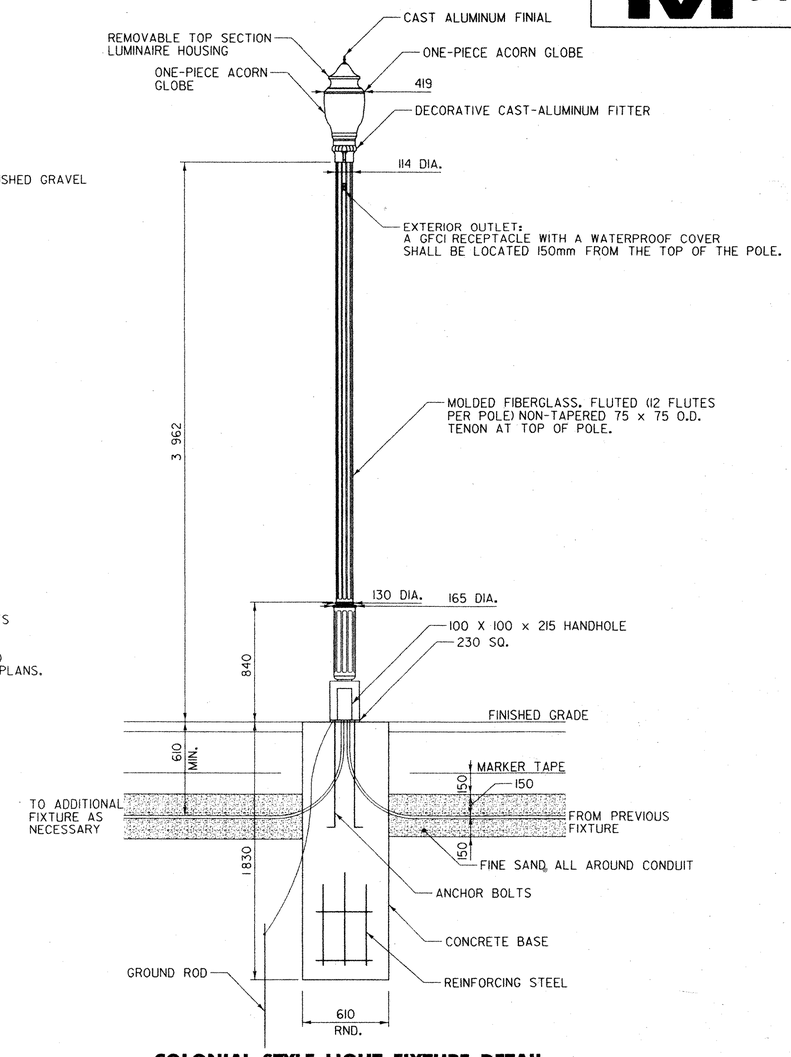


## COLONIAL STYLE LIGHT FIXTURE DETAIL

NOT TO SCALE

**NOTES:**

1. LIGHT POST AND FIXTURE ARE TO BE MANUFACTURED BY MOLDCAST AND HAVE A WASHINGTON CONTRACLINE GLOBE (WCC). ADDITIONAL REQUIRED OPTIONS INCLUDE A CAST FILIGREE BASKET (ALF) AND A PULSE START BALLAST (PSB). POSTS ARE TO BE BLACK (BLK) IN COLOR. MOLDCAST CATALOG NUMBER FOR EACH LUMINAIRE IS WCC-175MH-MT-ALF-PTA-BLK W/ POST TOP ADAPTOR FOR 75mm OD MNT. EACH LUMINAIRE SHALL INCLUDE A 175MH LAMP AND 175MH PS LAMP.
2. PHOTOCELLS ON THE ELECTRICAL SERVICE STANCHION SHALL ACTIVATE THE LUMINAIRE. SEE SHEET 14 FOR DETAILS.
3. PROVIDE HAND RUBBED FINISH ON ALL EXPOSED SURFACES OF CONCRETE BASE.
4. LIGHT POLE GROUND CONDUCTOR, # 8 AWG.
5. BASE REINFORCING: 12 #13 VERTICAL, 1 #13 HORIZONTAL, 300 O.C.
6. COMPACT BACKFILL AROUND CONCRETE BASE TO 95% MAXIMUM DENSITY STANDARD PROCTOR.
7. THE BROOKSIDE PLAZA PARKING LOT LIGHTS ARE THE SAME AS THE COLONIAL STYLE LIGHT FIXTURE DETAIL SHOWN ABOVE EXCEPT THAT THE CONCRETE BASE WILL HAVE A ONE-METER REVEAL. THE POLE ITSELF WILL BE 914mm SHORTER THAN THE PATHWAY LIGHT POLES SO THAT THE BASE OF THE GLOBE WILL BE AT THE SAME HEIGHT ABOVE FINISHED GRADE.
8. THE CONTRACTOR SHALL SUBMIT SHOP DRAWINGS OF THE LIGHT FIXTURE, POLE, GLOBE AND RELATED APPURTENANCES TO THE TOWN FOR REVIEW AND APPROVAL PRIOR TO ORDERING THE LIGHTS.

ALL DIMENSIONS SHOWN ON THIS SHEET ARE IN MILLIMETERS.

STATE OF VERMONT — JOSEPH W. TUCKER — No. 13806 — REGISTERED PROFESSIONAL ENGINEER

PLOTTED: 03/11/2004

DuBois & King inc.
engineering planning management development

TOWN OF BRATTLEBORO
BRATTLEBORO, VERMONT

WHETSTONE BROOK PATHWAY PROJECT
STP BIKE (27) S

DETAILS SHEET

| | |
|---|---|
| DRAWN BY SJB | DATE FEB. 2004 |
| CHECKED BY JM | PROJ. NO. R16544 |
| PROJ. ENG. JDA | DRAW. NO. 11450 |
| SHEET 22 OF 30 | |