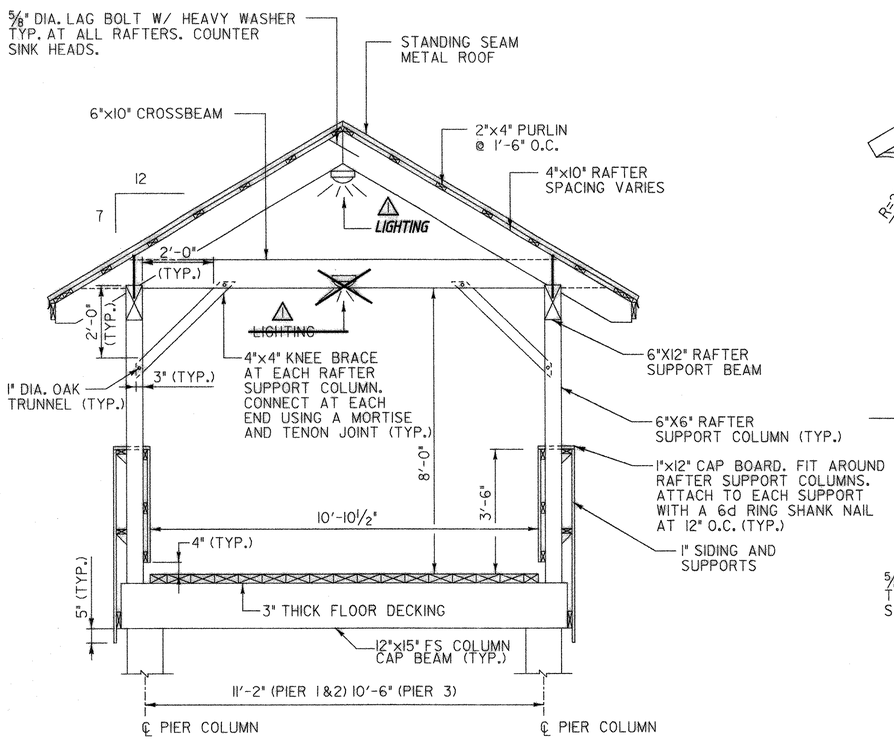

TYPICAL ELEVATED STAIR SECTION

(STA. 1+03.0 TO 1+54.1)

SCALE 1/2" = 1'-0"

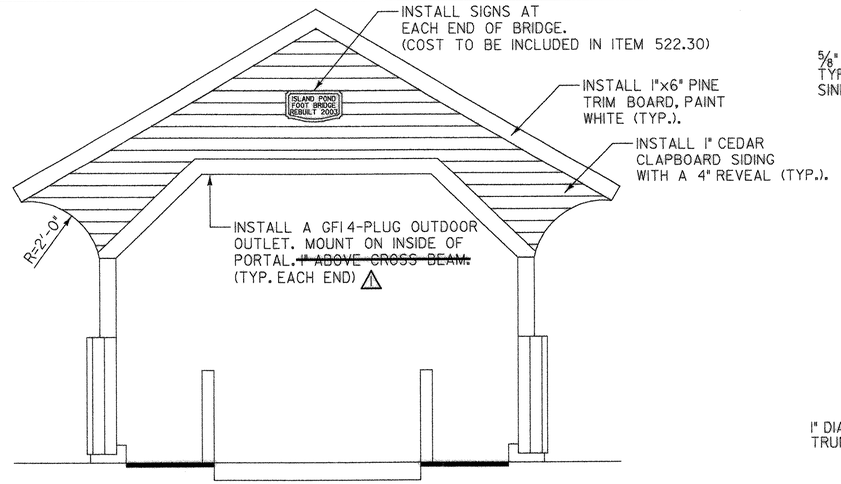

TYPICAL PORTAL SECTION

SCALE 1/2" = 1'-0"

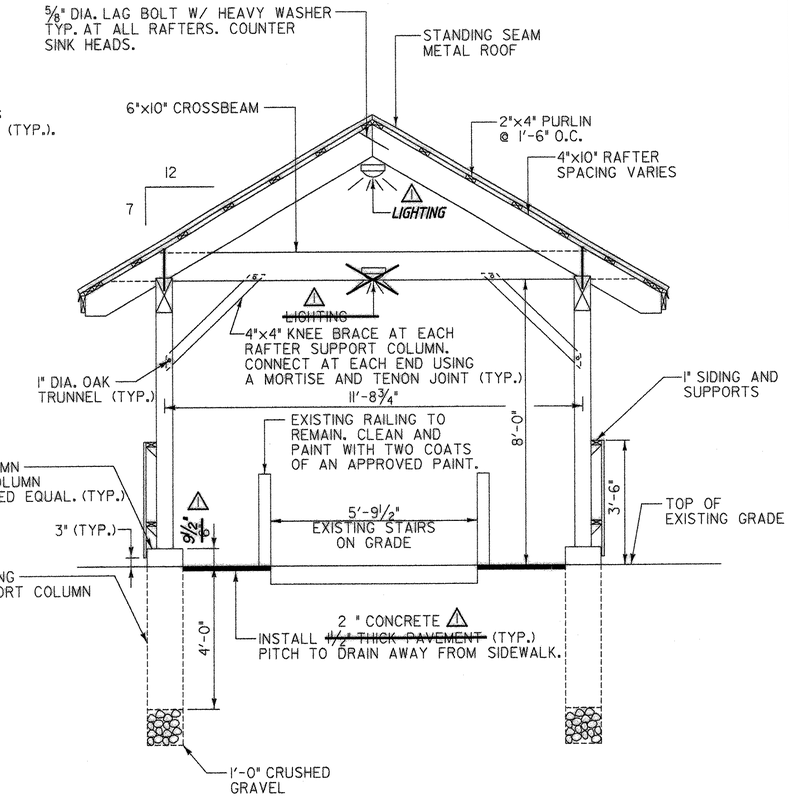

TYPICAL STAIR ON GRADE SECTION

(STA. 0+97.3 TO 1+03.0 - STA. 2+66.17 TO 3+27.4)

SCALE 1/2" = 1'-0"

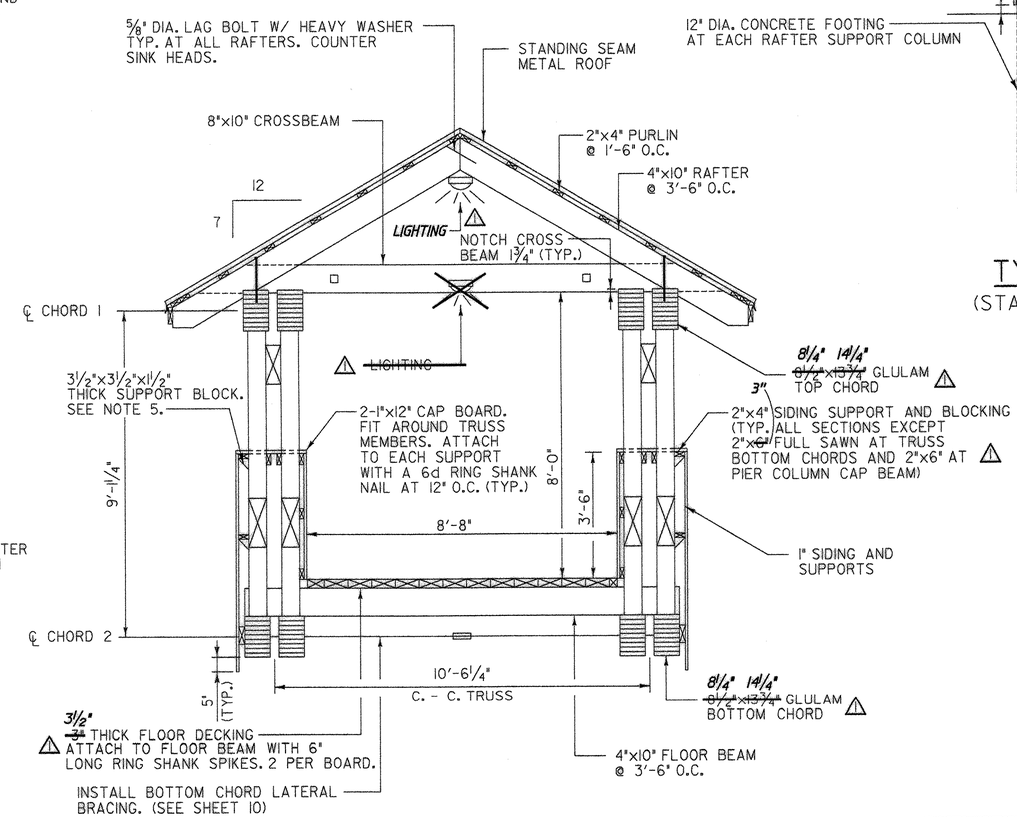

TYPICAL BRIDGE SECTION

(STA. 1+54.1 TO 2+66.17)

SCALE 1/2" = 1'-0"

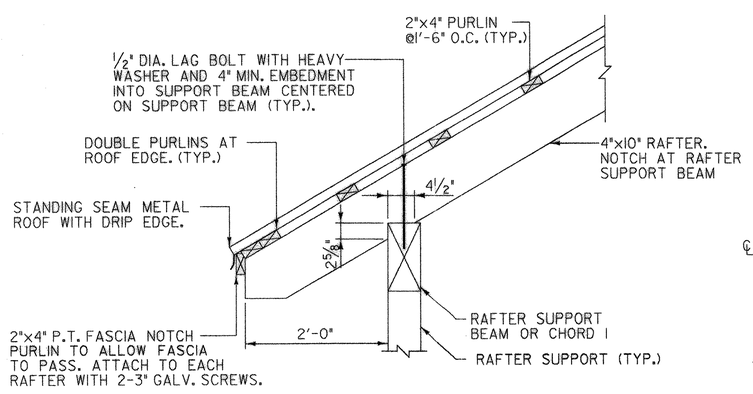

ROOF RAFTER DETAIL

SCALE: 1" = 1'-0"

PLAN NOTES

1. SEE SHEET 12 FOR FLOOR BEAM AND RAFTER LOCATIONS.
2. ROOF SYSTEM SHOWN IS A TYPICAL BRIDGE SECTION USED IN ELEVATED STAIR AND STAIR ON GRADE SECTIONS.
3. ATTACH SIDING SUPPORTS AND BLOCKS TO EACH TRUSS MEMBER OR RAFTER SUPPORT BEAM WITH 2-3 1/2" GALV. SCREWS.
4. FLOOR DECKING SHALL EXTEND TO THE BACK FACE OF THE INTERIOR SIDING.
5. INSTALL ONE 3 1/2"x3 1/2"x1 1/2" THICK SUPPORT BELOW EXTERIOR 2"x4" SIDING SUPPORTS AT EACH TRUSS MEMBER OR RAFTER SUPPORT COLUMN ATTACH TO 2"x4" AND TO EACH SUPPORT WITH 2-2 1/2" GALVANIZED SCREWS.

RECORD COPY REVISIONS	DR BY	CHK BY
	JBM	STJ

STATE OF VERMONT — SEAN T. JAMES — NO. 7941 — Structural — LICENSED PROFESSIONAL ENGINEER — 11/3/03

HTA consulting engineers
150 Dow Street - Manchester, NH 03101-1227 Tel 603-669-5555 Fax 603-669-4168
184 South Winooski Ave. - Burlington, VT 05401 Tel 802-860-1331 Fax 802-860-6499
Web Page: www.hoylettanner.com E-Mail: hsg@hta-nh.com

Town Of BRIGHTON		Bridge No.
Highway No.		Log Sta. / Surv. Sta.
BRIGHTON PEDESTRAIN BRIDGE		
TYPICAL BRIDGE SECTIONS		
Designed By S.T. JAMES	Drawn By J.D. GEER	
Checked By R.H. DURFEE	Date MAY. 2002	Bridge Design Supervisor / Date
PROJECT BRIGHTON		PROJECT NO. STP BIKE (14)S
I.G.C. Info. Z9068DET.dgn		
Bridge Sheet No. 7		Sheet 7 of 14