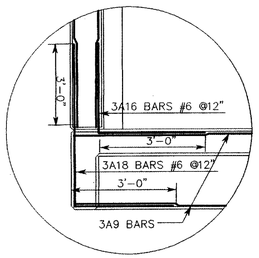

DETAIL A

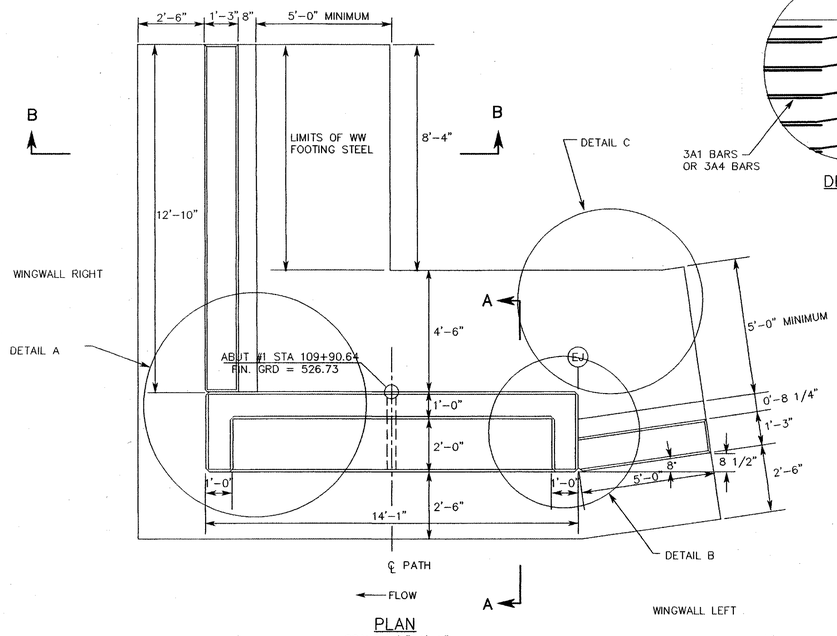

PLAN
SCALE 3/8"=1'-0"

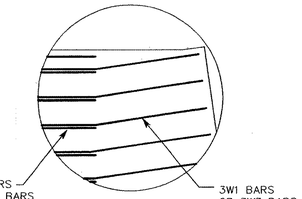

DETAIL C

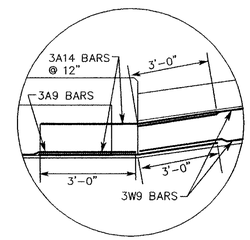

DETAIL B

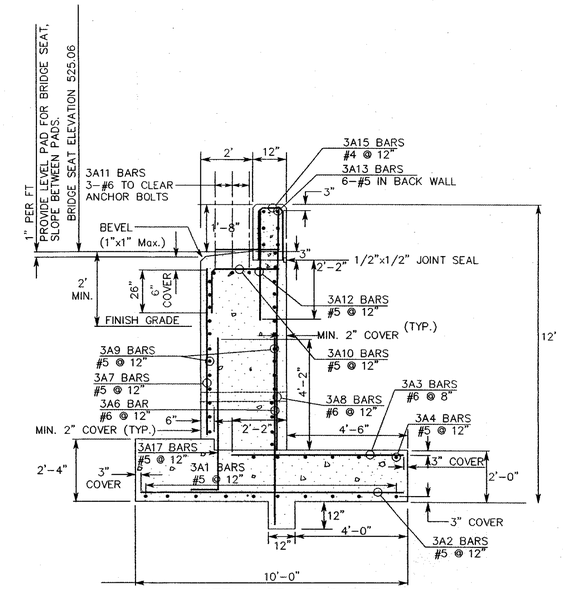

DETAIL OF ABUTMENT
SECTION A-A
SCALE 3/8"=1'-0"

SEE ABUTMENT DRAINAGE DETAIL SHEET 38.

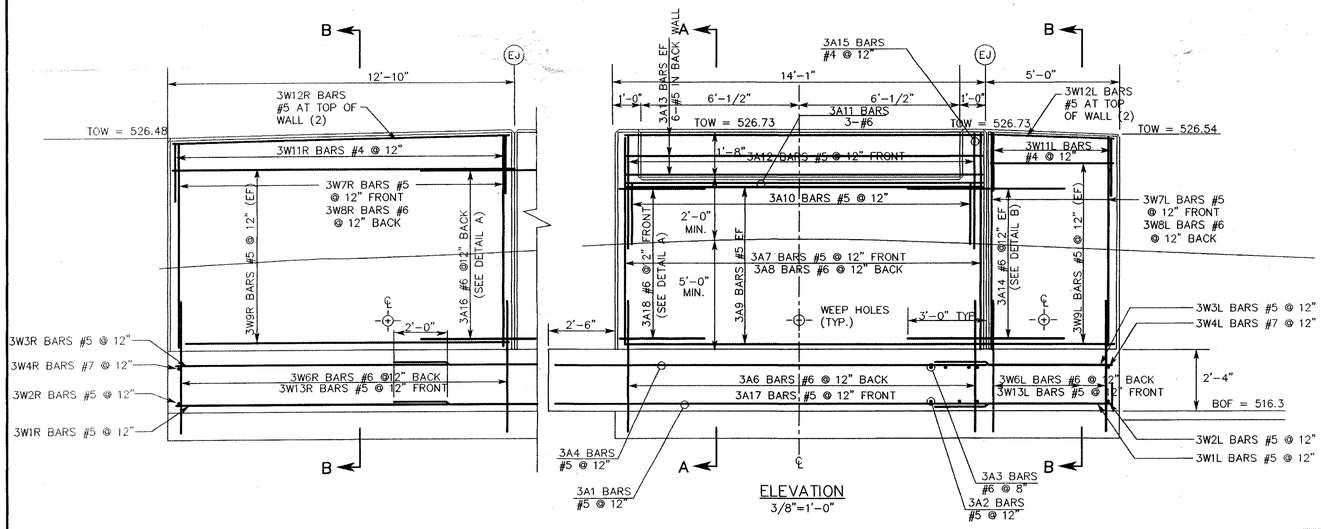

ELEVATION
3/8"=1'-0"

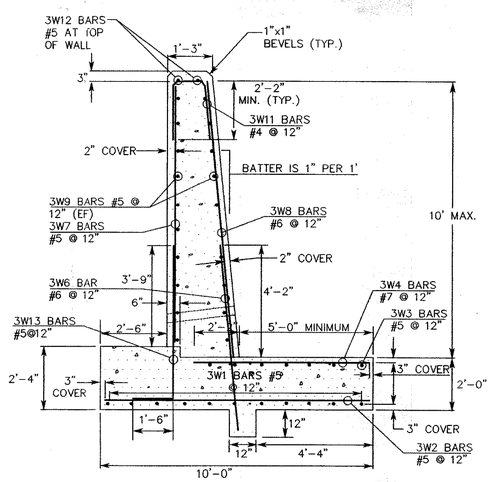

DETAIL OF WINGWALL
SECTION B-B
SCALE 3/8"=1'-0"

BRIDGE NO. 2 SUBSTRUCTURE ESTIMATED QUANTITIES

ITEM	DESCRIPTION	NET ABUT 1	NET ABUT 2	0'RUN	TOTAL	FINAL
203.27	UNCLASSIFIED CHANNEL EXCAVATION	0 C.Y.	39 C.Y.		39 C.Y.	
203.35	GRAVEL BACKFILL FOR SLOPE STABILIZATION	0 C.Y.	40 C.Y.		40 C.Y.	
204.25	STRUCTURE EXCAVATION	83 C.Y.	96 C.Y.		179 C.Y.	
204.30	GRANULAR BACKFILL FOR STRUCTURES	76 C.Y.	65 C.Y.		141 C.Y.	
501.25	CONCRETE, CLASS B	45.5 C.Y.	32 C.Y.		77.5 C.Y.	
507.15	REINFORCING STEEL	4013 LB	4687 LB		8700 LB	
514.10	WATER REPELLENT	6 GAL.	6 GAL.		12 GAL.	
524.20	JOINT SEALER, POLYURETHANE	1 GAL.	1 GAL.		2.0 GAL.	
602.20	DRY RUBBLE MASONRY	5 C.Y.	0 C.Y.		5 C.Y.	
613.13	STONE FILL-TYPE IV	0 C.Y.	200 C.Y.		200 C.Y.	
649.31	GEOTEXTILE UNDER STONE FILL	0 S.Y.	200 S.Y.		200 S.Y.	
649.61	GEOTEXTILE FOR FILTER CURTAIN	0 S.Y.	40 S.Y.		40 S.Y.	

Rev'd 2/27/98, DFH, Changed dimensions of abutment to accept configuration of Steadfast Bridge bearing plates.

Rev'd 1/7/98, DFH, Changed Bars: 3A1, 3A4, 3A7, 3A8, 3A14, 3A18 3W1R, 3W2R, 3W3R, 3W11R, 3W1L, 3W3L

BRIDGE NO. 2
ABUTMENT NO. 1

FAX. (802)-658-3629 P.E.A. BUS. (802)-658-5588
PINKHAM ENGINEERING ASSOCIATES, INC.
50 Joy Drive, P.O. Box 2225, South Burlington, VT 05407

SURVEYED BY PEA DATE
DRAWN BY DFH DATE
SQUAD LEADER
DESIGN FILE NO. 6829DET2 DATE PLOTTED 4/9/97
PROJ. NAME WINOOSKI RIVER WEST BIKEWAY
PROJ. NO. 6829
SHEET 51 OF 132 SHEETS