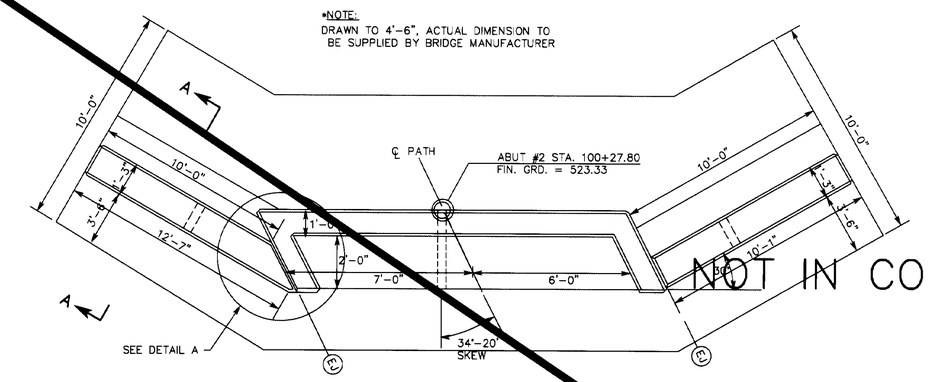

NOT IN CONTRACT

WINGWALL LEFT

PLAN

WINGWALL RIGHT

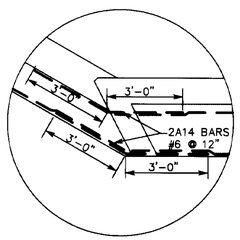

DETAIL A

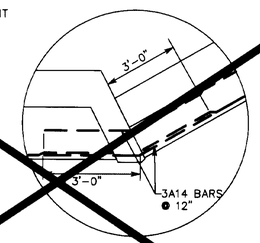

DETAIL B

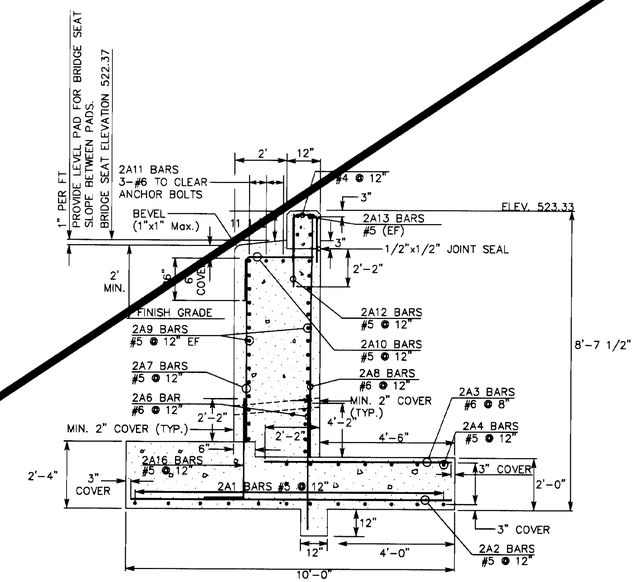

DETAIL OF ABUTMENT
SECTION A–A
SCALE 3/8"=1'-0"

SEE ABUTMENT DRAINAGE DETAIL SHEET 38.

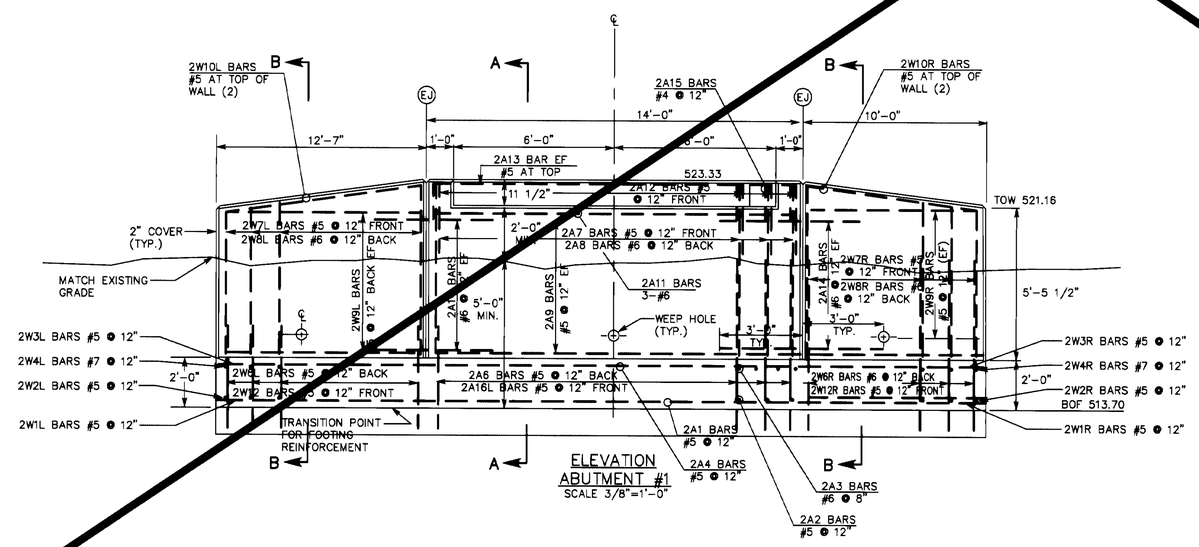

ELEVATION
ABUTMENT #1
SCALE 3/8"=1'-0"

WINGWALL LEFT

WINGWALL RIGHT

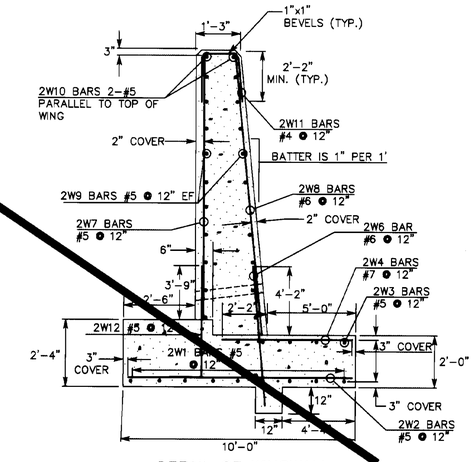

DETAIL OF WINGWALL
SECTION B–B
SCALE 3/8"=1'-0"

BRIDGE #1
ABUTMENT #2

FAX. (802)-658-3629 P.E.A. BUS. (802)-658-5588
PINKHAM ENGINEERING ASSOCIATES, INC.
The Mattex Building, 431 Pine St., Burlington, VT 05401

SURVEYED BY	PEA	DATE	
DRAWN BY	JMM	DATE	
SQUAD LEADER			
DESIGN FILE NO.	6829DET5	DATE PLOTTED	9/25/96
PROJ. NAME	WINOOSKI RIVER WEST BIKEWAY		
PROJ. NO.	6829		
SHEET 50	OF 132 SHEETS		