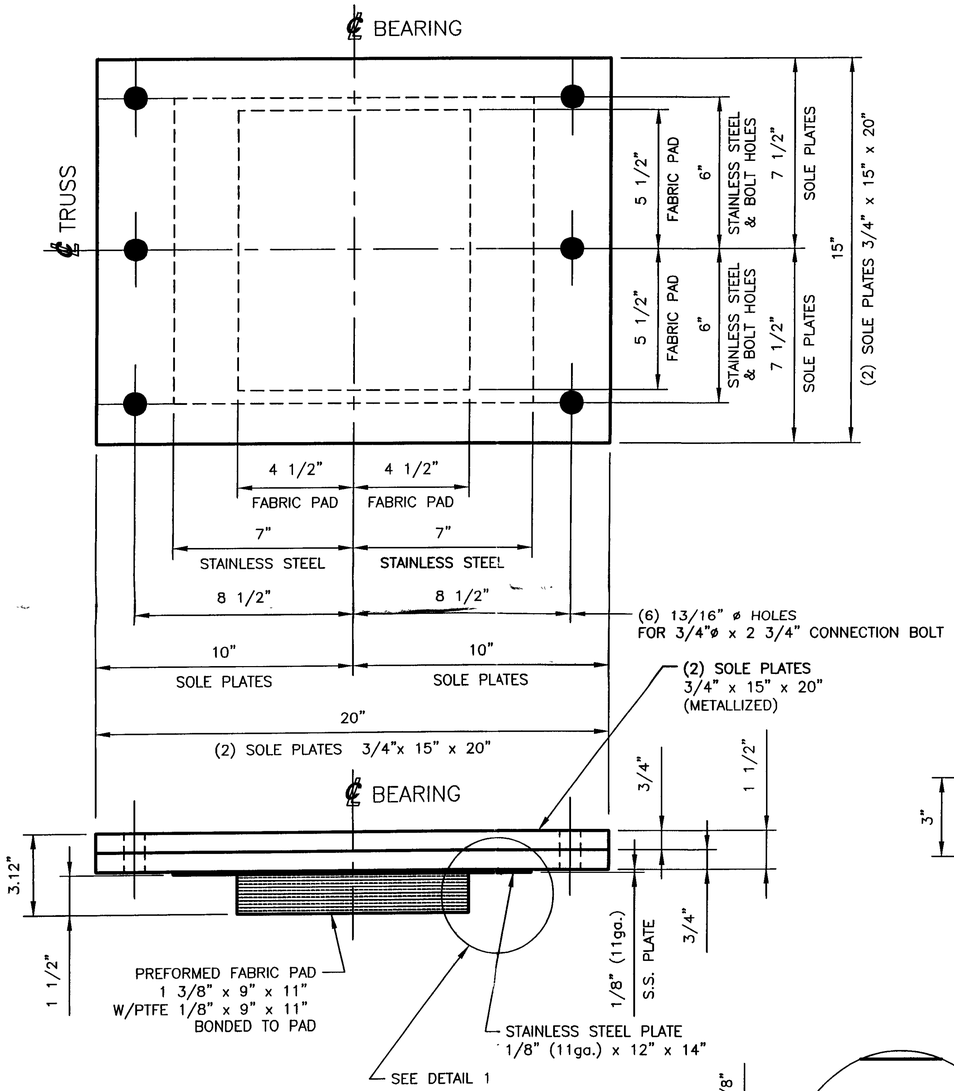

4 EXPANSION BEARING ASSEMBLIES, EB1

LOCATED AT
PIER TRUSS

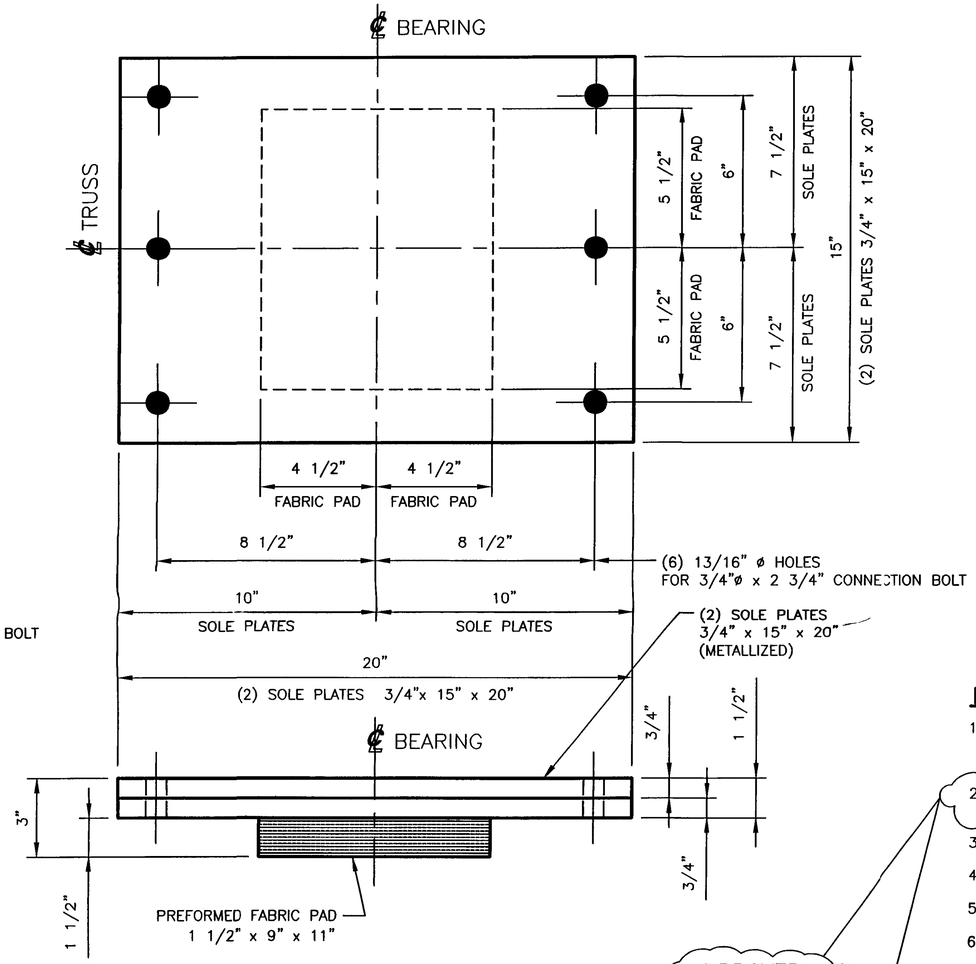

4 FIXED BEARING ASSEMBLIES, FB1

LOCATED AT
ABUTMENT TRUSS

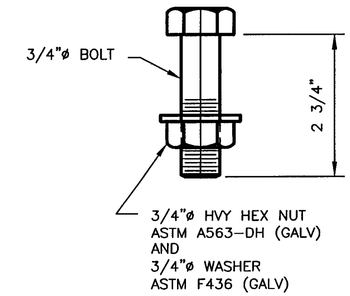

48 CONNECTION BOLTS, CB1

HEADED BOLT 3/4"ø x 2 3/4"
ASTM A325 (GALV)
LOCATED AT
(24) @ FIXED BEARING ASSEMBLY, FB1
(24) @ EXPANSION BEARING ASSEMBLY, EB1

RECEIVED
CK'D BY HKB OK'D BY
MAY 1 3 2008
PESUBMIT APPROVED RGS
BY DATE 5/22/08

NOTES:

1. BEARING SHALL CONFORM TO THE APPLICABLE SUBSECTION 531 AND 731 OF STANDARD SPECIFICATIONS.
2. SURFACES TO BE METALLIZED SHALL BE PREPARED AND COATED IN ACCORDANCE WITH AWS C2.18
3. STEEL – ASTM A709 GR 50 (METALLIZED)
4. PREFORMED FABRIC PAD – MIL-C-882
5. ANCHOR BOLTS – ASTM A449 A307 - Ok to use A449
6. CONNECTION BOLTS – ASTM A325

APPROVER:
PLEASE VERIFY PLATES & ANGLES TO BE METALLIZED OR GALVANIZED.

METALLIZED IS OK

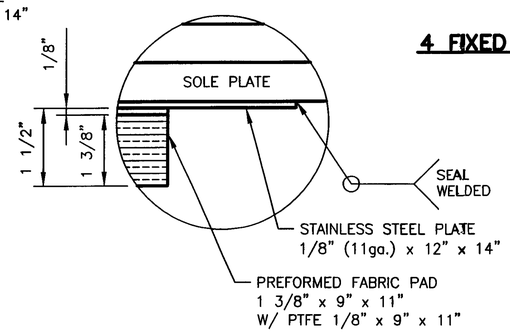

DETAIL 1

CCS Constructors LLC
138 Munson Avenue
Morrisville, VT 05661
Ph 802-888-7701 f 802-888-4746

REV.	DESCRIPTION	BY	DATE	CK'D	DATE

EXPANSION BEARING ASSEMBLY
FIX BEARING ASSEMBLY

VERMONT AGENCY OF TRANSPORTAION
TOWN OF SWANTON
HISTORIC BRIDGE No. 18
OVER THE MISSISQUOI RIVER

STATE	COUNTY	CONTRACT NO.
VT	FRANKLIN	N/A

FED. AID PROJECT NO.: STP ST MHTB (1)

DYNAMIC RUBBER
A DIVISION OF COSMEC, INC.
1501 ROCKY RIDGE ROAD
ATHENS, TX 75751

SCALE: NONE	DRAWN BY: KYW DATE: 4/7/208	CHECKED BY: JR DATE: 4/25/2008
SHEET 1 OF 2	DRP NO.: 9824	
CUSTOMER CCS CONSTRUCTORS LLC	DRAWING NUMBER 9824-D1	REV 0