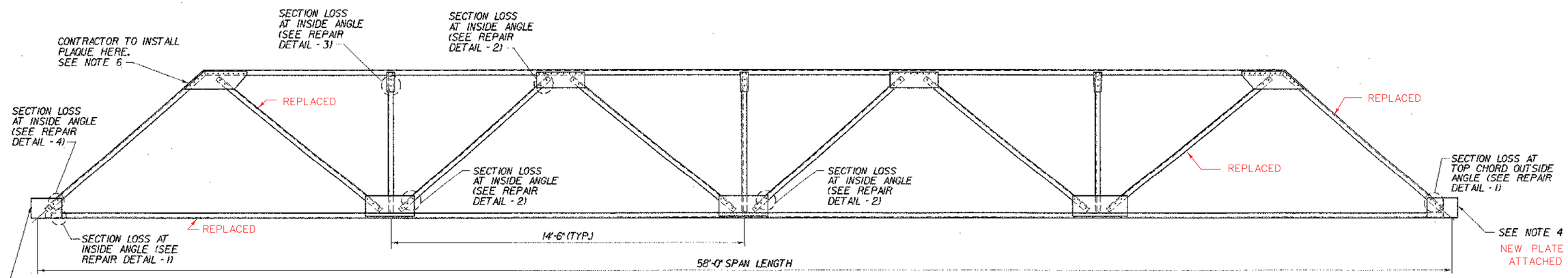

RIGHT TRUSS ELEVATION

SCALE 1/2" = 1'-0

1 0 1 2

LEGEND:

INSIDE ANGLE = ANGLE THAT FACES WALKWAY.

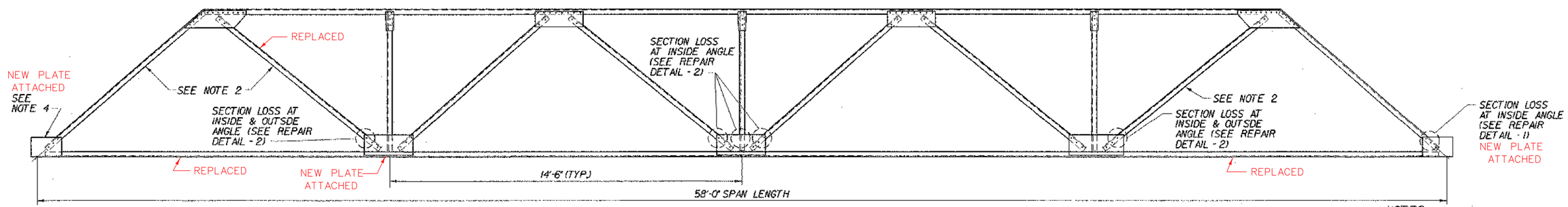

LEFT TRUSS ELEVATION

SCALE 1/2" = 1'-0

1 0 1 2

NOTES:

1. CONTRACTOR TO VERIFY EXISTING TRUSS DIMENSIONS BEFORE CUTTING PLATES.
2. STRAIGHTEN BENT MEMBER AS PER VAOT SPECIFICATION 506.12(H).
3. CONTRACTOR SHALL REMOVE AND REPLACE ANY RIVETS WITH SEVERE SECTION LOSS AS PER ENGINEER.
4. STRAIGHTEN BENT PLATE AS PER VAOT SPECIFICATION 506.12(H).
5. AFTER TRUSS IS BLAST CLEANED, ENGINEER SHALL INSPECT AND DETERMINE IF ADDITIONAL STRENGTHENING IS REQUIRED.
6. CONTRACTOR TO INSTALL PLAQUE AT LOCATION SHOWN. VAOT WILL PROVIDE PLAQUE AND HARDWARE. A GASKET SHALL BE INSTALLED BETWEEN PLAQUE AND TRUSS AND BOLT SLEEVES SHALL BE USED. PAYMENT FOR THIS ITEM SHALL BE INCLUDED IN ITEM 506.75.

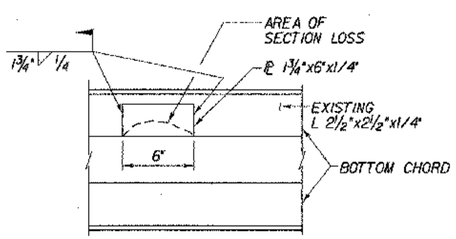

REPAIR DETAIL - 1 (PLAN VIEW)

(NOT TO SCALE)

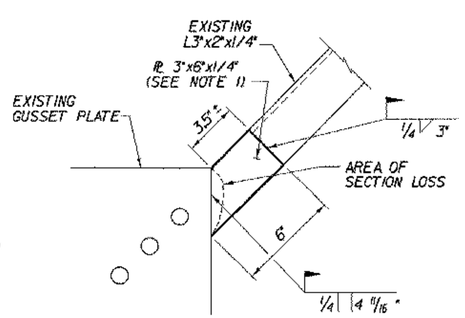

REPAIR DETAIL - 2

(NOT TO SCALE)

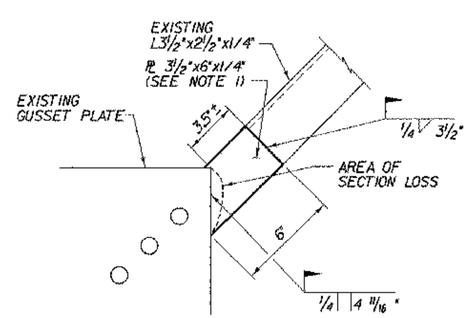

REPAIR DETAIL - 4

(NOT TO SCALE)

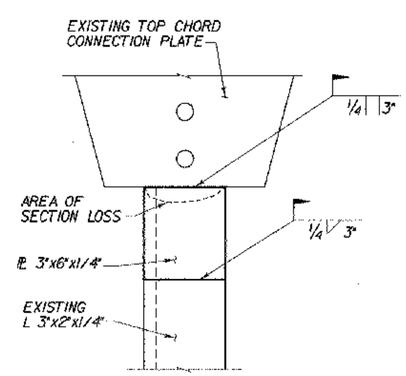

REPAIR DETAIL - 3

(NOT TO SCALE)

CLOUGH, HARBOUR & ASSOCIATES LLP
ENGINEERS, SURVEYORS, PLANNERS & LANDSCAPE ARCHITECTS
ENGINEERS CIRCLE ALBANY, NEW YORK 12203

STATE OF VERMONT
AGENCY OF TRANSPORTATION

Town Of WEST RUTLAND	Bridge No. XX
Highway No. CLARENDON AVE.	Log Sta.
	Surv. Sta.

PEDESTRIAN BRIDGE OVER CLARENDON BROOK

STEEL REPAIR DETAILS

Designed By L. HARDEN	Drawn by Wm WEATHERBY
Checked By M. OLSTAD Date 4/2002	Bridge Design Supervisor M. OLSTAD Date 4/2002
PROJECT WEST RUTLAND	PROJECT NO. ST WALK (3)
I.G.C. Info.	
Bridge Sheet No. BR106	Sheet 8 OF 12

DATE/TIME = 11/01/02
USER = 24637