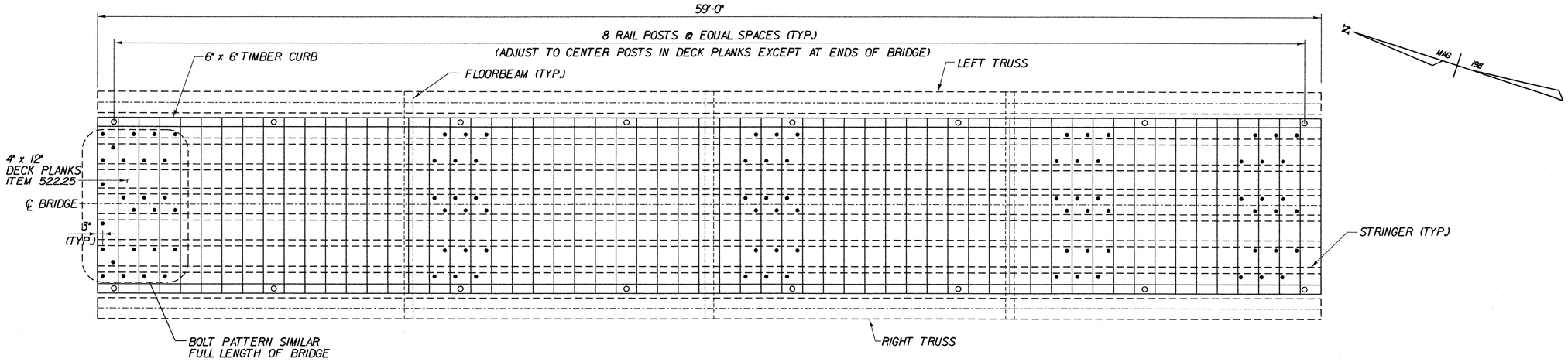

DECK LAYOUT AND BOLTING PATTERN

SCALE 3/8" = 1'-0

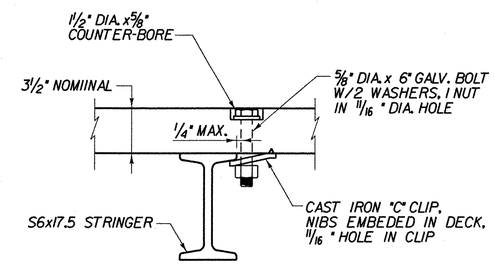

DECK TO STRINGER CONNECTION

SCALE 3" = 1'-0

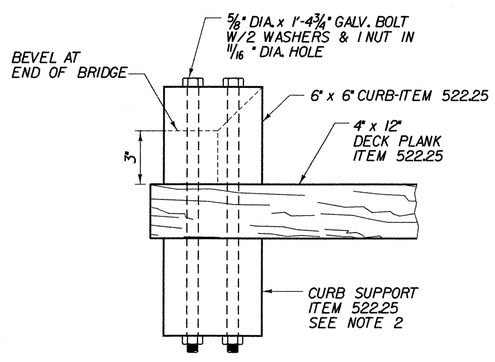

TYPICAL CURB SECTION

SCALE 3" = 1'-0

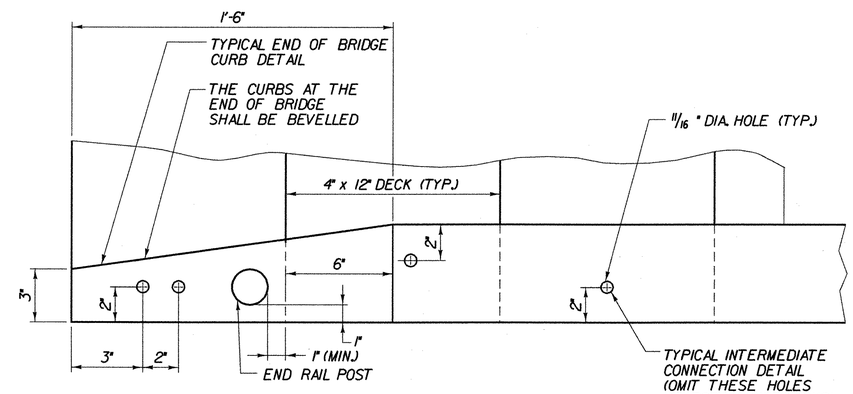

CURB CONNECTION PLAN

SCALE 3" = 1'-0

NOTES:

1. USE FULL PLANKS ON ENDS AND ADJUST WIDTH OF 1 OR 2 INTERIOR PLANKS TO MATCH SPAN OF BRIDGE.
2. TERMINATE CURB SUPPORT AT EACH FLOORBEAM AND BEGIN AGAIN AFTER FLOORBEAM.

STATE OF VERMONT
AGENCY OF TRANSPORTATION

Town Of WEST RUTLAND	Bridge No. XX
	Log Sta.
Highway No. CLARENDON AVE.	Surv. Sta.
PEDESTRIAN BRIDGE OVER CLARENDON BROOK	
DECK PLAN AND DETAILS	
Designed By L. HARDEN	Drawn by Wm WEATHERBY
Checked By M. OLSTAD Date 4/2002	Bridge Design Supervisor M. OLSTAD Date 4/2002
PROJECT WEST RUTLAND	PROJECT NO. ST WALK (II)
I.G.C. Info.	
Bridge Sheet No. BR104	Sheet 6 OF 12

CLOUGH, HARBOUR & ASSOCIATES LLP
ENGINEERS, SURVEYORS, PLANNERS & LANDSCAPE ARCHITECTS
8 WINNERS CIRCLE ALBANY, NEW YORK, 12205

FILE NAME =u:\10224\MSTN\15\DCKLAYOUT.PLT
DATE/TIME =11/01/02
USER =2467