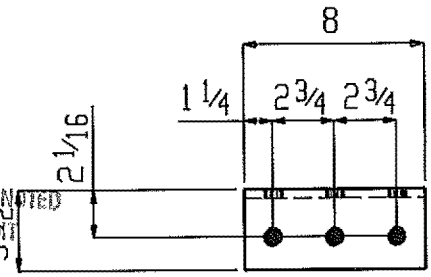

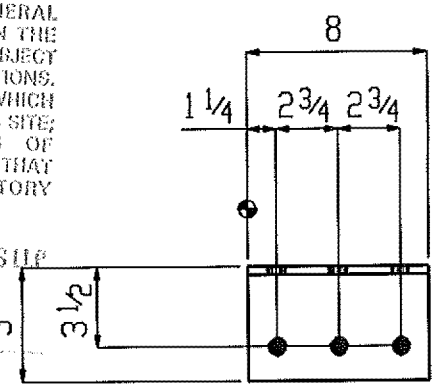

NO EXCEPTION TAKEN
REJECTED
MAKE CORRECTIONS NOTED
REVISE AND RESUBMIT
SUBMIT SPECIFIED ITEM

CHECKING IS ONLY FOR GENERAL CONFORMANCE WITH THE DESIGN CONCEPT OF THE PROJECT AND GENERAL COMPLIANCE WITH THE INFORMATION GIVEN IN THE CONTRACT DOCUMENTS. ANY ACTION SHOWN IS SUBJECT TO THE REQUIREMENTS OF THE PLANS AND SPECIFICATIONS. CONTRACTOR IS RESPONSIBLE FOR DIMENSIONS WHICH SHALL BE CONFIRMED AND CORRELATED AT THE JOB SITE; FABRICATION PROCESSES AND TECHNIQUES OF CONSTRUCTION; COORDINATION OF HIS WORK WITH THAT OF ALL OTHER TRADES AND THE SATISFACTORY PERFORMANCE OF HIS WORK.

JOHN H. HARRIUS & ASSOCIATES LLP
ARCHITECTS, ENGINEERS, PLANNERS
LANDSCAPE ARCHITECTS

6/2/09

96 L5x3½x⅜x0-8 a3

GRADE: M270-50

Renaud Bros. Inc.
283 Fort Bridgeman Rd. #2
Vernon, VT. 05354
Phone 1-802 257-7383

JOB: WALLINGFORD BRIDGE WALLINGFORD, VT				PART
BOLTS: ¾" DIA. M164-I GALV	STL GR: M270-50 UNO	DRWN BY: EG	DATE: 5-11-09	SHT:
	HOLES: 13/16 UNO	CHK:	JOB NO:	a3

May 15 2009 03:07:54 PM