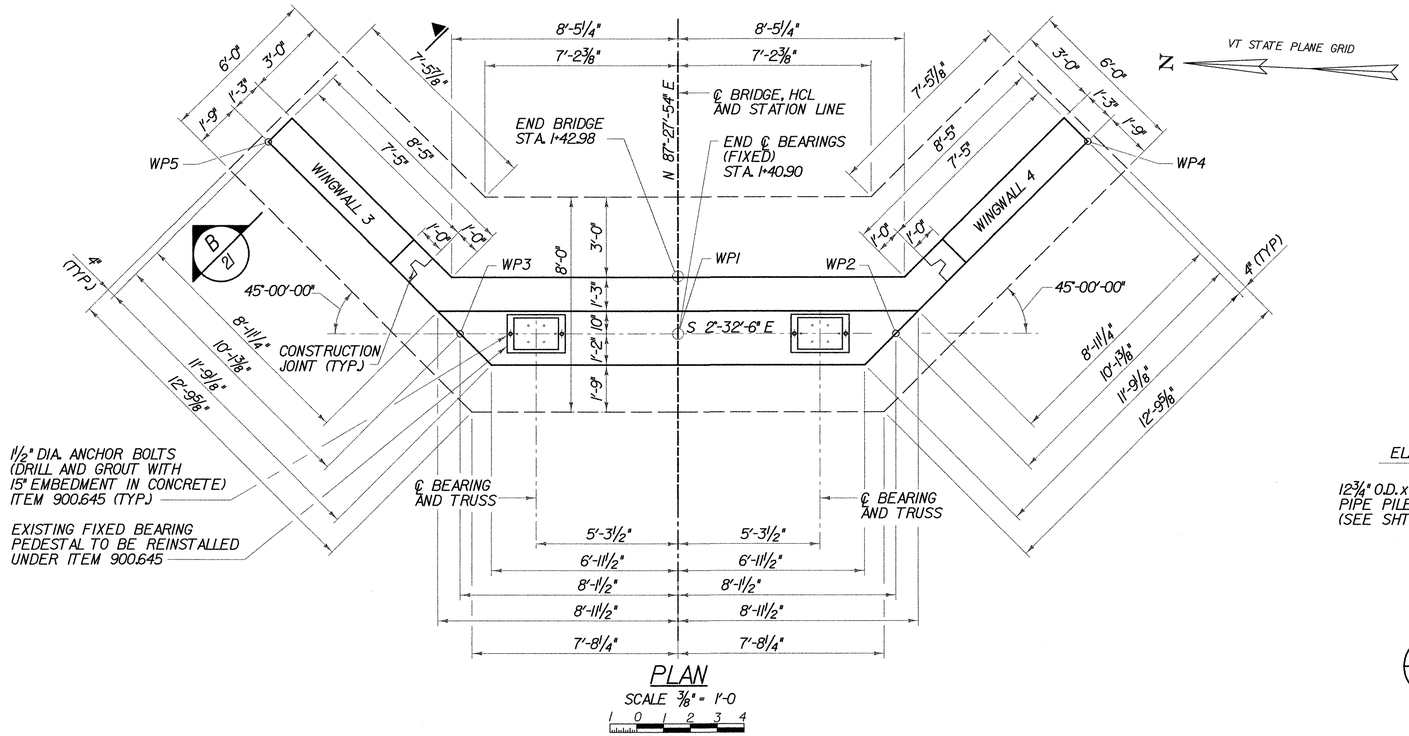

PLAN

SCALE ⅜" = 1'-0

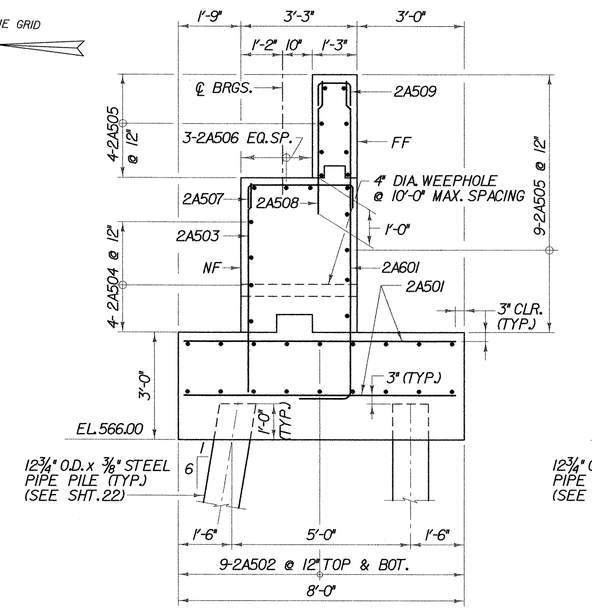

A 21 TYPICAL ABUTMENT SECTION

SCALE ½" = 1'-0

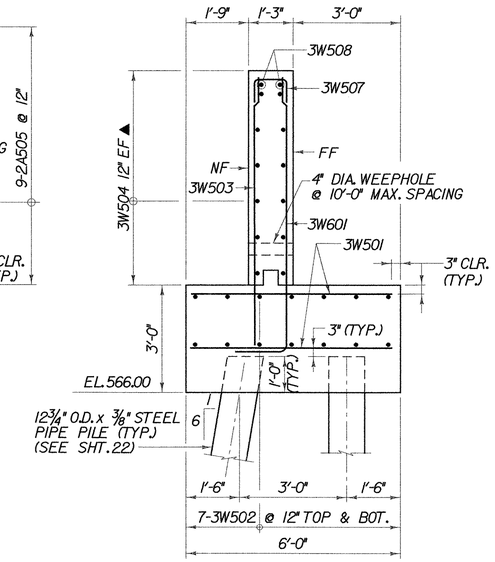

B 21 TYPICAL WINGWALL SECTION

SCALE ½" = 1'-0 (WINGWALL 3 SHOWN, WINGWALL 4 SIMILAR)

NOTES:

1. THE 2A506 REINFORCEMENT BARS SHALL BE PLACED TO AVOID ANCHOR ROD PLACEMENT.

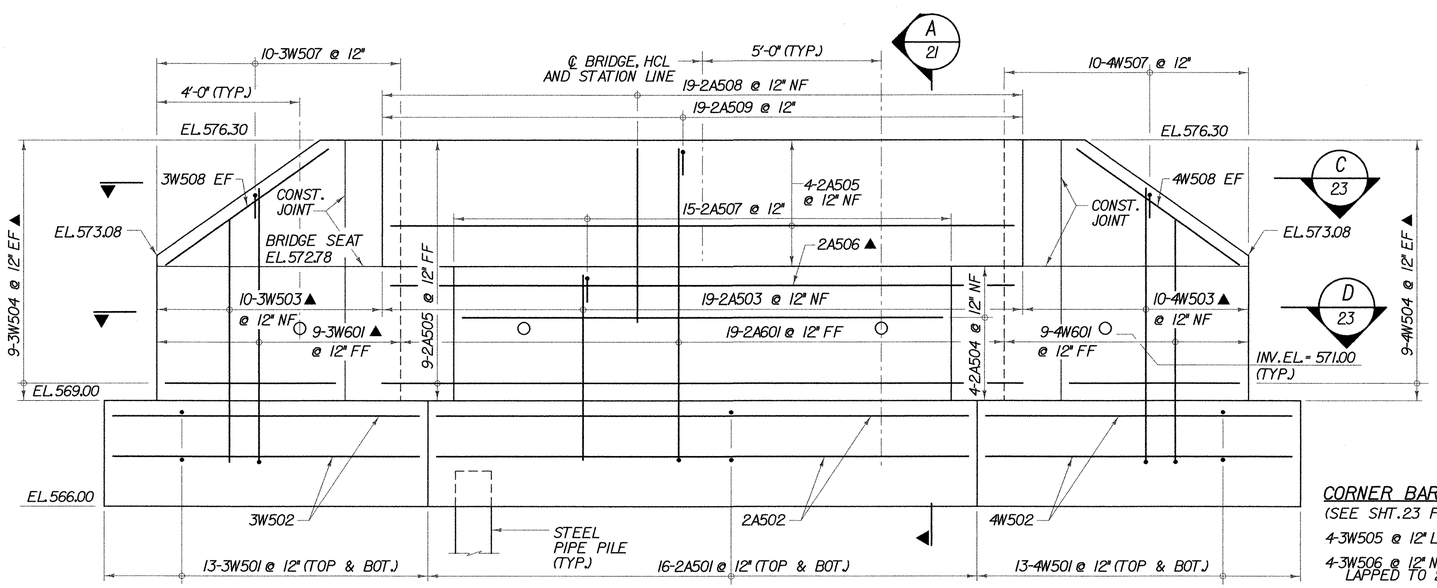

WINGWALL 3 (SPLAYED VIEW) | ELEVATION | WINGWALL 4 (SPLAYED VIEW)

SCALE ½" = 1'-0

KEY:

NF = NEAR FACE
FF = FAR FACE
EF = EACH FACE
▲ = CUT TO FIT IN FIELD
3" CLR. UNLESS OTHERWISE SPECIFIED ON THE PLANS.

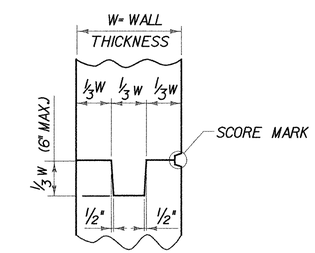

TYPICAL CONCRETE CONSTRUCTION JOINT

(NOT TO SCALE)

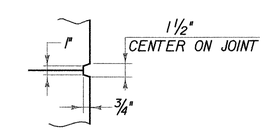

1 / 21 SCORE MARK DETAIL

(NOT TO SCALE)

CORNER BARS NOT SHOWN FOR CLARITY:

(SEE SHT. 23 FOR DETAILS)

4-3W505 @ 12" LAPPED TO 2A504 & 3W504
4-3W506 @ 12" NF & 4-3W506 @ 12" FF LAPPED TO 2A505 & 3W504
5-3W509 @ 12" FF LAPPED TO 3W504
4-4W505 @ 12" LAPPED TO 2A504 & 4W504
4-4W506 @ 12" NF & 4-4W506 @ 12" FF LAPPED TO 2A505 & 4W504
5-4W509 @ 12" FF LAPPED TO 4W504

Drawing Copyright © 2009

CHA

ABUTMENT 2 PLAN AND ELEVATION

PROJECT NAME: WALLINGFORD
PROJECT NUMBER: STP ST WALK(14)

FILE NAME: $FILES$
PROJECT MANAGER: SUSAN SCRIBNER
DESIGNED BY: L. HARDEN
BRIDGE DESIGN SUPERVISOR: P. HALSTEAD

PLOT DATE: 1/9/2009
DRAWN BY: W. WEATHERBY
CHECKED BY: P. HALSTEAD
SHEET 21 OF 26

FILE NAME =u\86669\mstn\prefinal_submission\x02f136ab2ehk.dgn
DATE/TIME =1/9/2009
USER =2552