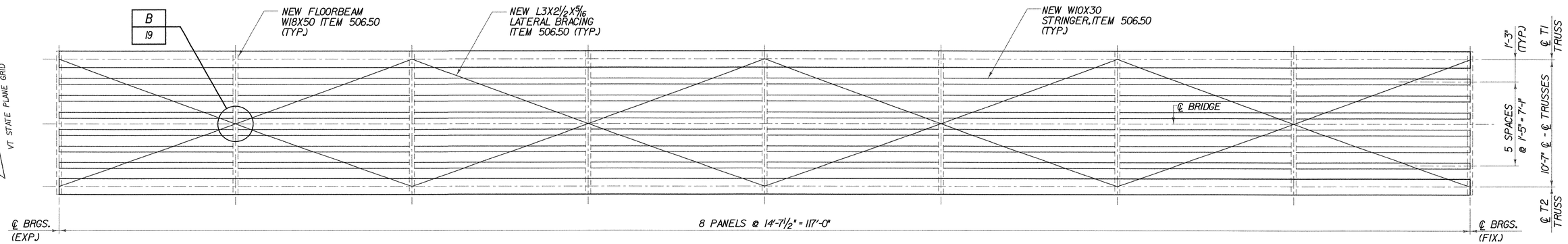

LATERAL BRACING PLAN

SCALE 1/4" = 1'-0

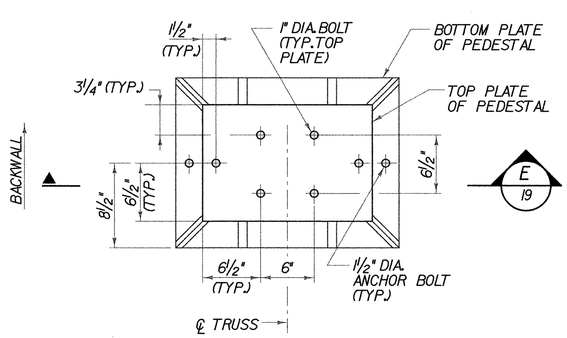

PLAN - FIXED BEARING PEDESTAL (TOP)

T1 BEARING SHOWN, T2 BEARING SIMILAR
(NOT TO SCALE)

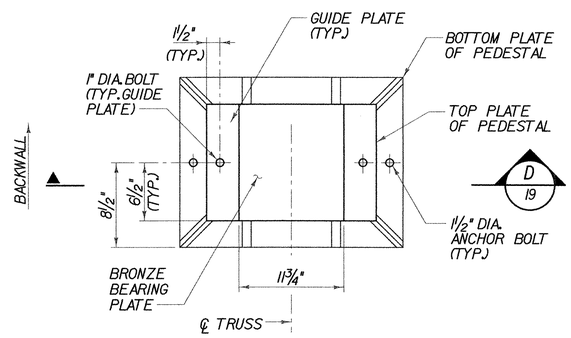

PLAN - EXPANSION BEARING PEDESTAL (TOP)

T2 BEARING SHOWN, T1 BEARING SIMILAR
(NOT TO SCALE)

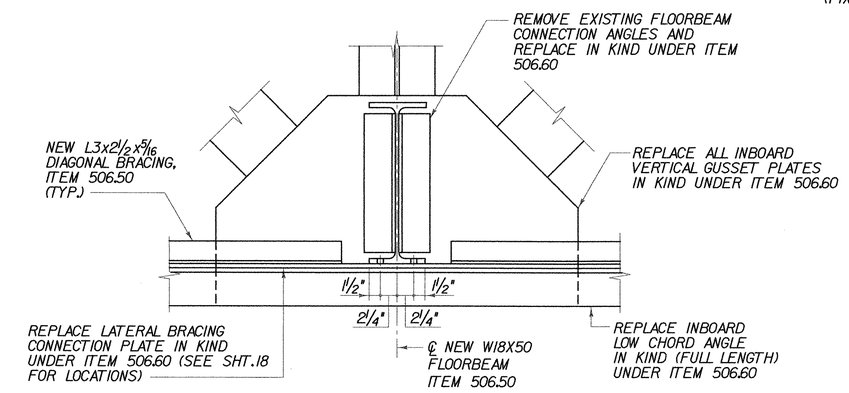

A / 18 GUSSET TO FLOORBEAM CONNECTION

(CONNECTION AT L2, L4 & L6 SHOWN)
(CONNECTION @ L0, L1, L3, L5, L7 & L8 SIMILAR)
(NOT TO SCALE)

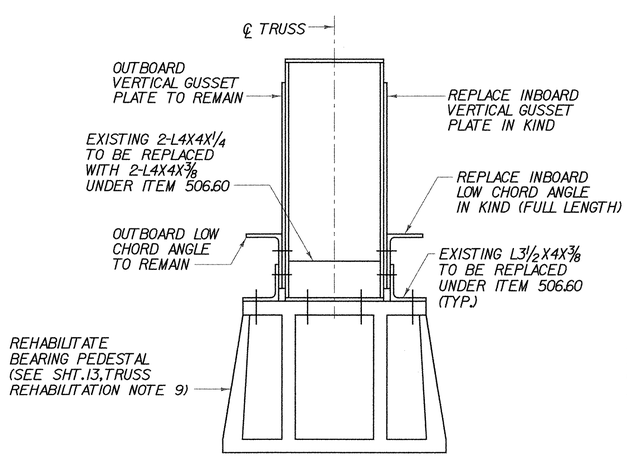

E / 19 TYPICAL FIXED END

(NOT TO SCALE)

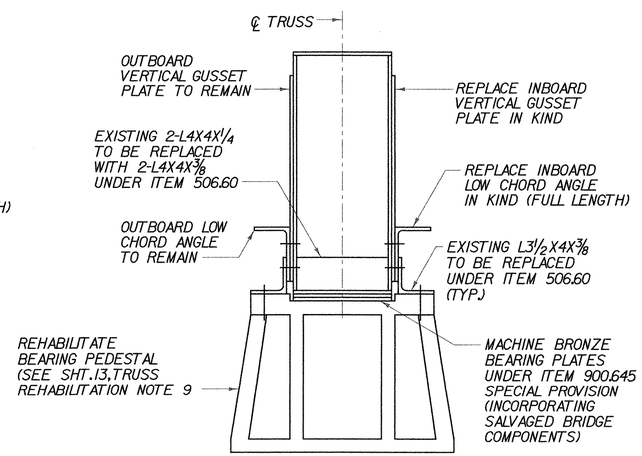

D / 19 TYPICAL EXPANSION END

NOT TO SCALE

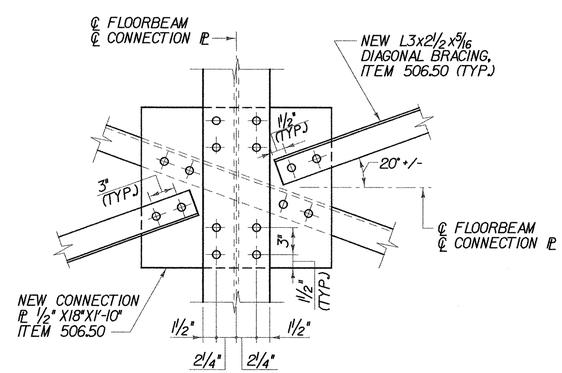

B / 19 DIAGONAL BRACING CONNECTION AT MIDSPAN OF FLOORBEAM

(NOT TO SCALE)

NOTES:

1. SEE SHT. 13 FOR ADDITIONAL INFORMATION REGARDING PAYMENT AND REQUIRED SUBMITTALS.
2. WHERE NEW STRUCTURAL STEEL IS NOT FULLY DETAILED IN THE PLANS, THE CONTRACTOR SHALL DETAIL THE MEMBERS TO ACCOMMODATE FIELD FIT-UP AT COMPONENTS/MEMBERS TO BE REPLACED IN KIND.

FRAMING PLAN AND DETAILS

PROJECT NAME: WALLINGFORD	
PROJECT NUMBER: STP ST WALK(14)	
FILE NAME: $FILES$	PLOT DATE: 1/9/2009
PROJECT MANAGER: SUSAN SCRIBNER	DRAWN BY: W. WEATHERBY
DESIGNED BY: L. HARDEN	CHECKED BY: P. HALSTEAD
BRIDGE DESIGN SUPERVISOR: P. HALSTEAD	SHEET 19 OF 26

Drawing Copyright © 2009

CHA

FILE NAME =u\8669\mstn\prefinal_submission\z02f136fmgsht.dgn
DATE/TIME =1/9/2009
USER =2552