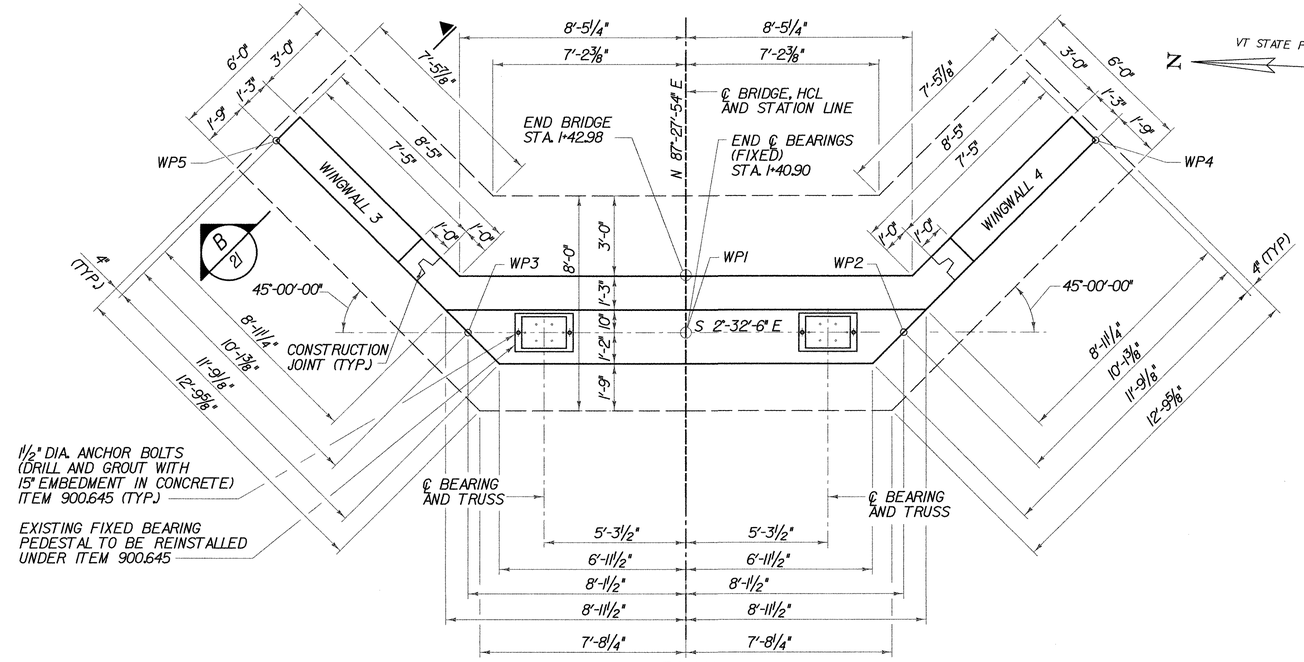

PLAN

SCALE 3/8" = 1'-0

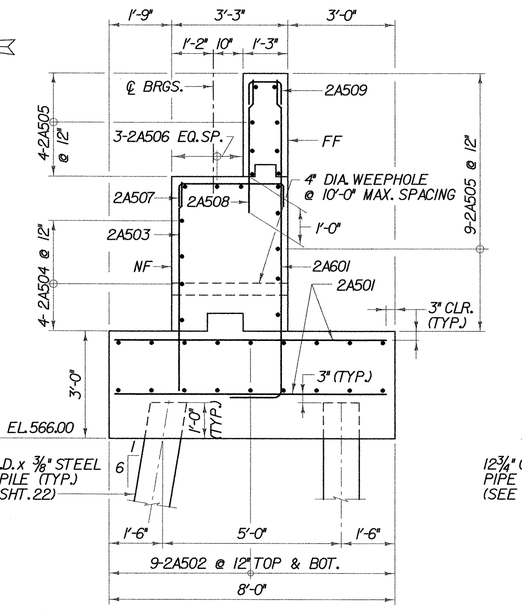

A 21 TYPICAL ABUTMENT SECTION

SCALE 1/2" = 1'-0

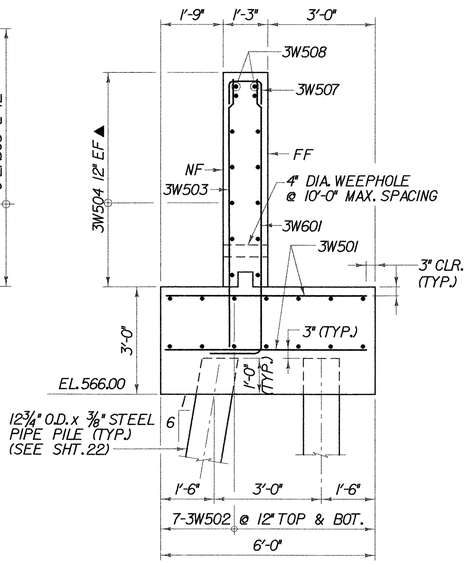

B 21 TYPICAL WINGWALL SECTION

SCALE 1/2" = 1'-0 (WINGWALL 3 SHOWN, WINGWALL 4 SIMILAR)

NOTES:

1. THE 2A506 REINFORCEMENT BARS SHALL BE PLACED TO AVOID ANCHOR ROD PLACEMENT.

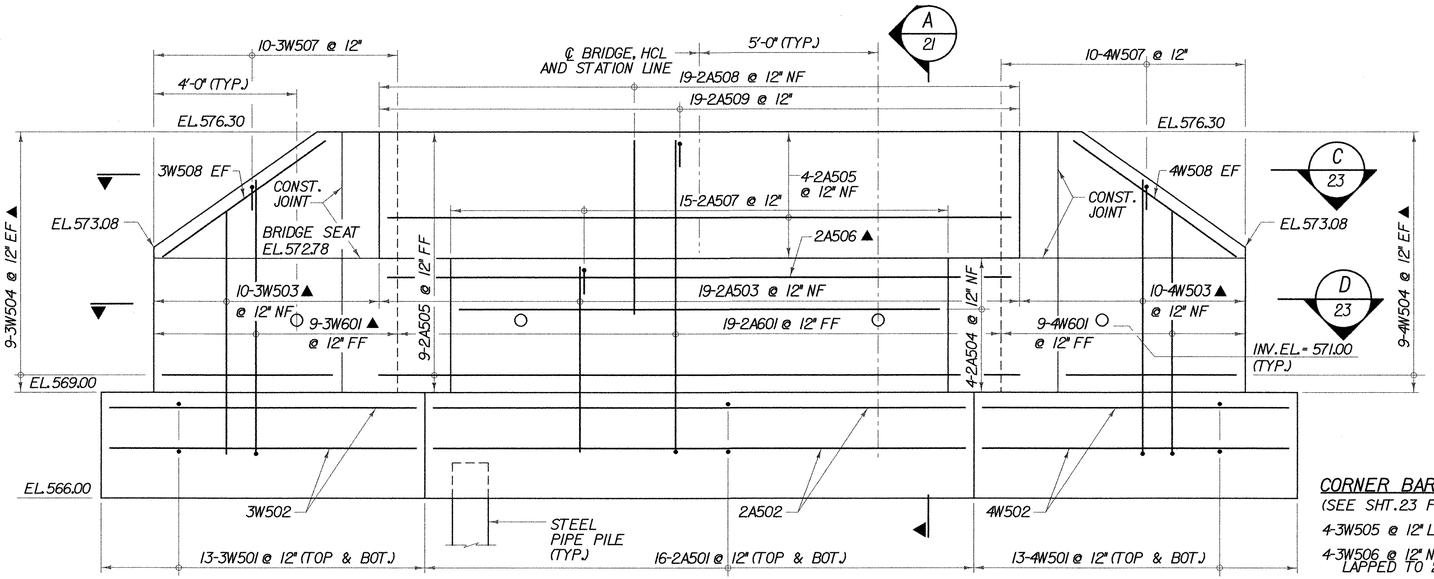

WINGWALL 3 (SPLAYED VIEW)

ELEVATION

SCALE 1/2" = 1'-0

WINGWALL 4 (SPLAYED VIEW)

KEY:

NF = NEAR FACE
FF = FAR FACE
EF = EACH FACE
▲ = CUT TO FIT IN FIELD
3" CLR. UNLESS OTHERWISE SPECIFIED ON THE PLANS.

CORNER BARS NOT SHOWN FOR CLARITY:

(SEE SHT. 23 FOR DETAILS)

4-3W505 @ 12" LAPPED TO 2A504 & 3W504
4-3W506 @ 12" NF & 4-3W506 @ 12" FF LAPPED TO 2A505 & 3W504
5-3W509 @ 12" FF LAPPED TO 3W504
4-4W505 @ 12" LAPPED TO 2A504 & 4W504
4-4W506 @ 12" NF & 4-4W506 @ 12" FF LAPPED TO 2A505 & 4W504
5-4W509 @ 12" FF LAPPED TO 4W504

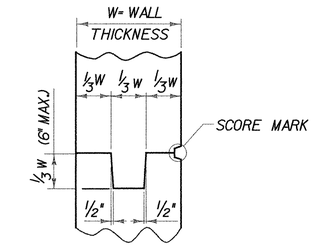

TYPICAL CONCRETE CONSTRUCTION JOINT

(NOT TO SCALE)

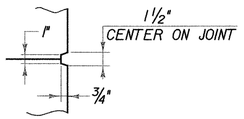

1 / 21 SCORE MARK DETAIL

(NOT TO SCALE)

ABUTMENT 2 PLAN AND ELEVATION

PROJECT NAME: WALLINGFORD	
PROJECT NUMBER: STP ST WALK(14)	
FILE NAME: $FILES$	PLOT DATE: 1/9/2009
PROJECT MANAGER: SUSAN SCRIBNER	DRAWN BY: W. WEATHERBY
DESIGNED BY: L. HARDEN	CHECKED BY: P. HALSTEAD
BRIDGE DESIGN SUPERVISOR: P. HALSTEAD	SHEET 21 OF 26

Drawing Copyright © 2009

CHA

FILE NAME =u:\0868\west\prefinal_submission\x82f138ab2sh1.dgn
DATE/TIME =1/9/2009
USER =2652