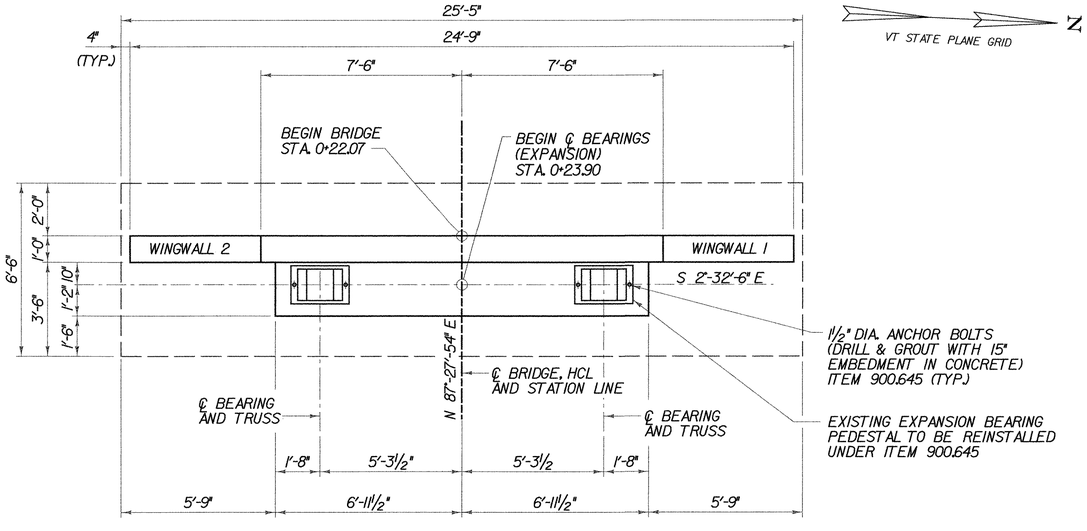


## PLAN

SCALE ⅜" = 1'-0

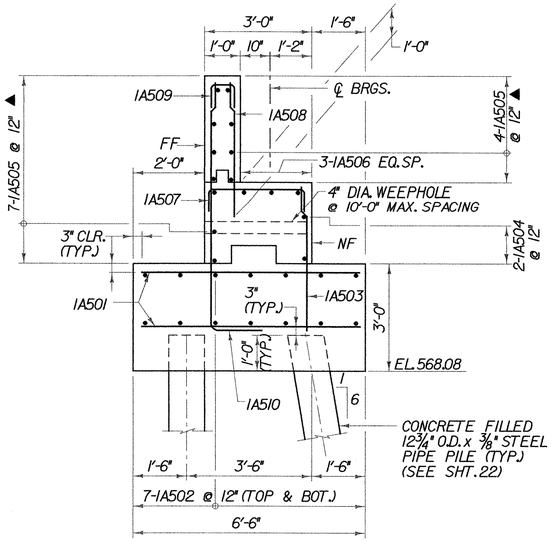


## A 20 TYPICAL ABUTMENT SECTION

SCALE ½" = 1'-0

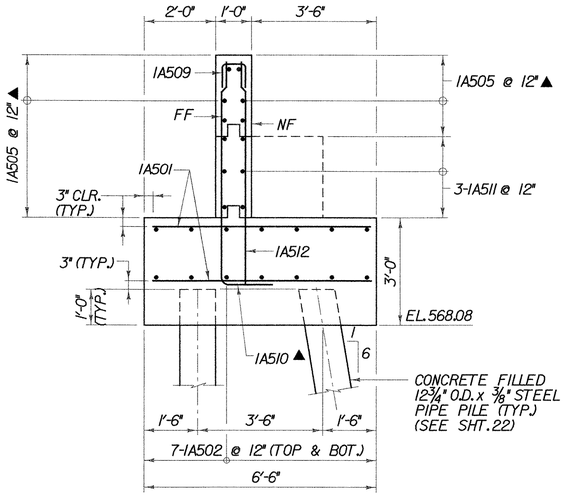


## B 20 TYPICAL WINGWALL SECTION

SCALE ½" = 1'-0

**NOTES:**

1. THE 1A506 REINFORCEMENT BARS SHALL BE PLACED TO AVOID ANCHOR ROD PLACEMENT.

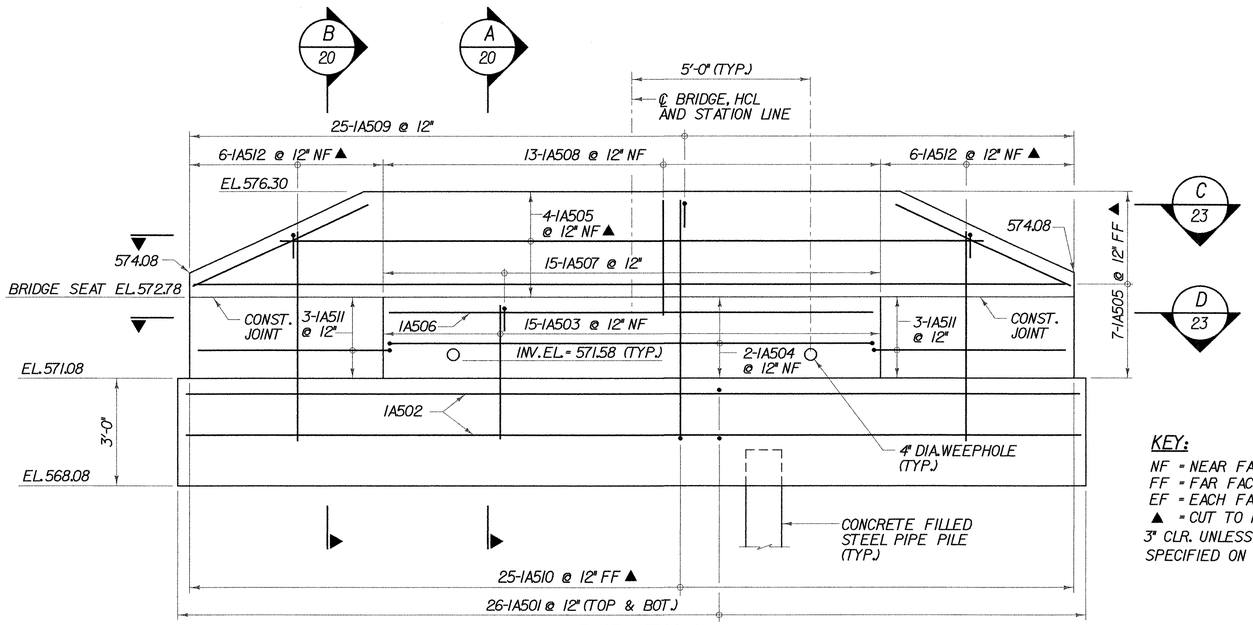


## ELEVATION

SCALE ½" = 1'-0

**KEY:**

NF = NEAR FACE
FF = FAR FACE
EF = EACH FACE
▲ = CUT TO FIT IN FIELD
3" CLR. UNLESS OTHERWISE SPECIFIED ON THE PLANS.

# ABUTMENT 1 PLAN AND ELEVATION

| | |
|---|---|
| PROJECT NAME: WALLINGFORD | |
| PROJECT NUMBER: STP ST WALK(14) | |
| FILE NAME: $FILES$ | PLOT DATE: 1/9/2009 |
| PROJECT MANAGER: SUSAN SCRIBNER | DRAWN BY: W. WEATHERBY |
| DESIGNED BY: L. HARDEN | CHECKED BY: P. HALSTEAD |
| BRIDGE DESIGN SUPERVISOR: P. HALSTEAD | SHEET 20 OF 26 |

Drawing Copyright © 2009

CHA

FILE NAME =u:\8669\mstr\prefinal_submission\z82713bsbsh1.dgn
DATE/TIME =1/9/2009
USER =25552