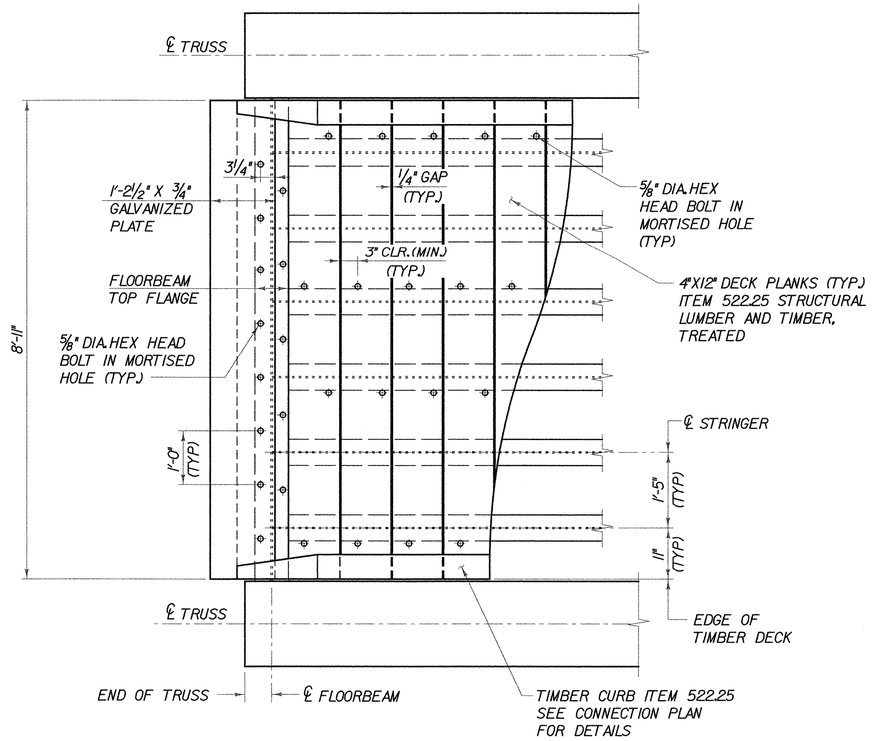

TIMBER DECK PARTIAL PLAN

SCALE ¾" = 1'-0

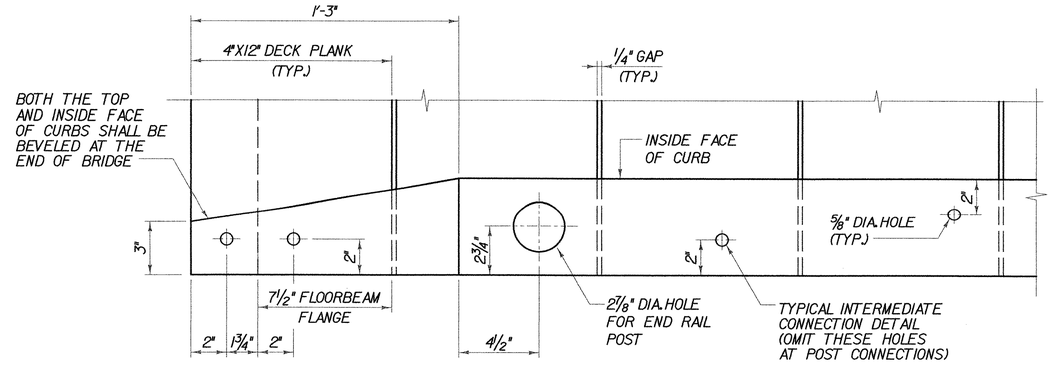

CURB CONNECTION PLAN

SCALE 3" = 1'-0

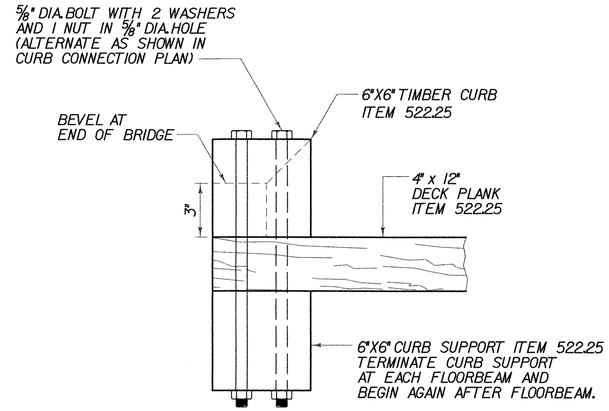

TYPICAL CURB SECTION

SCALE 3" = 1'-0

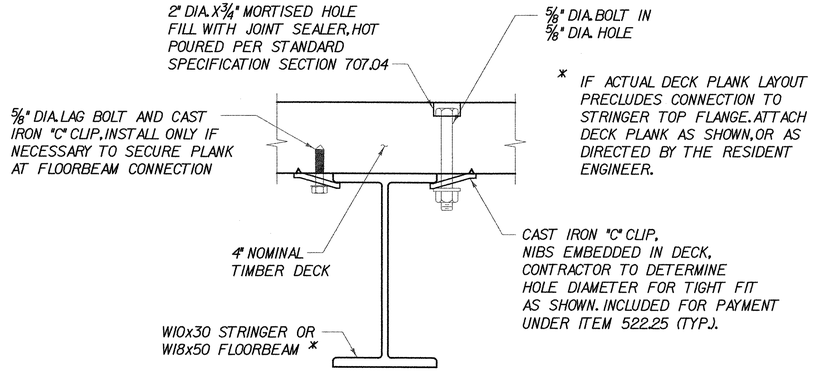

DECK CONNECTION DETAIL

SCALE 3" = 1'-0

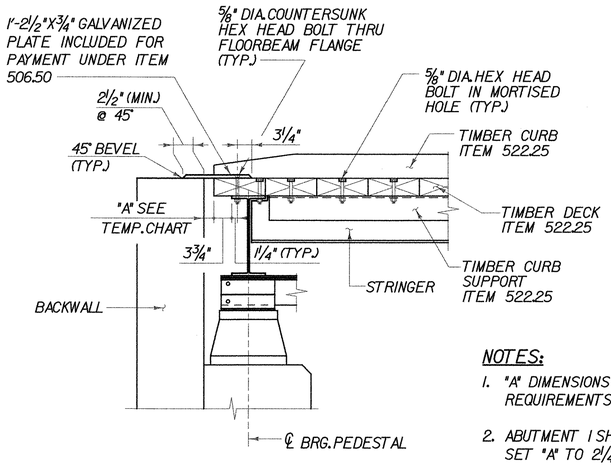

TEMP. CHART	
TEMP.	"A"
0° F	2¾"
15° F	2⅝"
30° F	2½"
45° F	2¼"
60° F	2⅛"
75° F	2"
90° F	1⅞"
105° F	1¾"

NOTES:

1. "A" DIMENSIONS SHOWN IN TEMP. CHART ARE MINIMUM REQUIREMENTS AT ABUTMENT 1.
2. ABUTMENT 1 SHOWN, ABUTMENT 2 SIMILAR. AT ABUTMENT 2 SET "A" TO 2¼" REGARDLESS OF AMBIENT TEMPERATURE.

END JOINT DETAIL

SCALE ¾" = 1'-0

DECK PLAN AND DETAILS

PROJECT NAME: WALLINGFORD	
PROJECT NUMBER: STP ST WALK(14)	
FILE NAME: $FILES$	PLOT DATE: 1/9/2009
PROJECT MANAGER: SUSAN SCRIBNER	DRAWN BY: W. WEATHERBY
DESIGNED BY: L. HARDEN	CHECKED BY: P. HALSTEAD
BRIDGE DESIGN SUPERVISOR: P. HALSTEAD	SHEET 17 OF 26

Drawing Copyright © 2009

CHA

FILE NAME = u:\8269\WSTN\prefinal_submission\s82713bdk1ay1out.dgn
DATE/TIME = 1/9/2009
USER = 2652