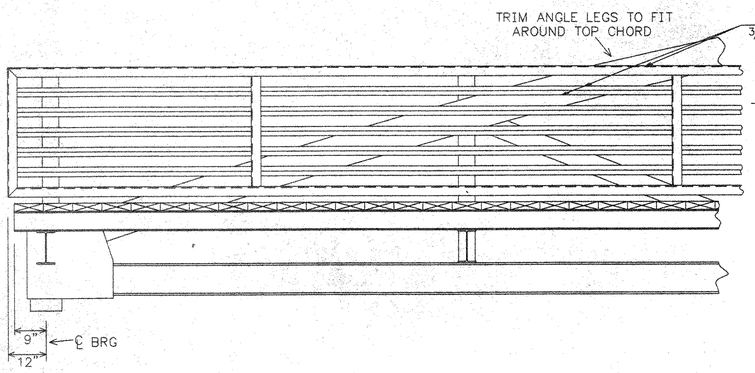

PIER 2

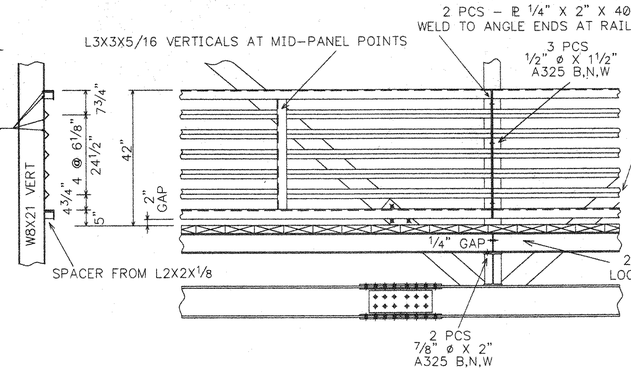

BRIDGE AND RAIL SPLICES

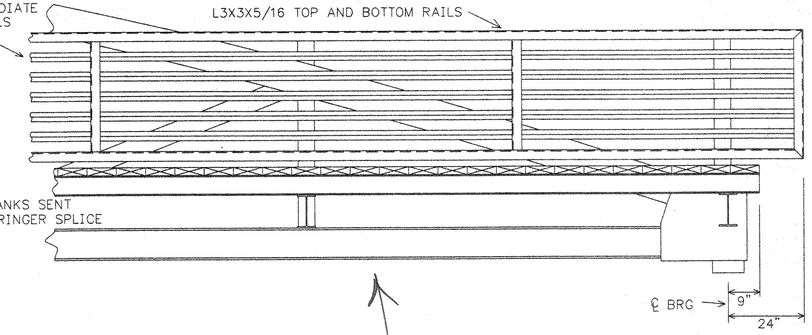

FORWARD (NORTH) ABUTMENT

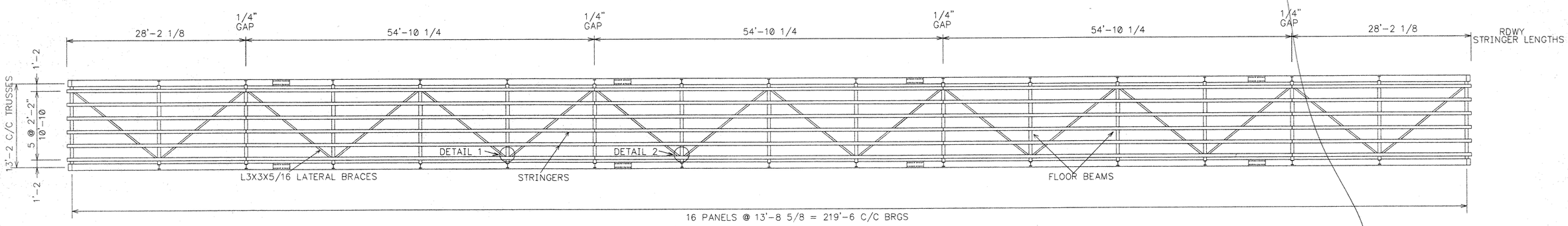

BRIDGE FLOOR FRAMING PLAN

per plans. rail height from 8+50 to 8+77 is 6'-0" see sheet So of 87. revise details to ~~[illegible]~~ reflect this.

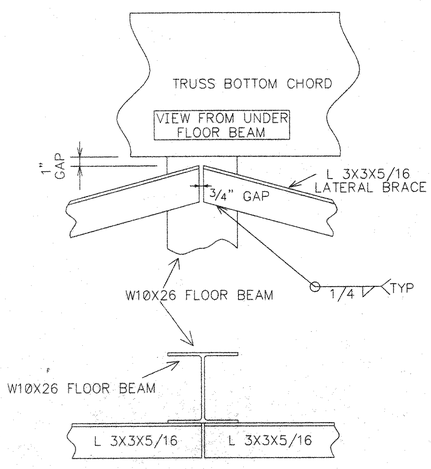

DETAIL 1
LATERAL BRACE DETAIL
10 LOCATIONS AS SHOWN
4 LOCATIONS SIMILAR (1 LATERAL)

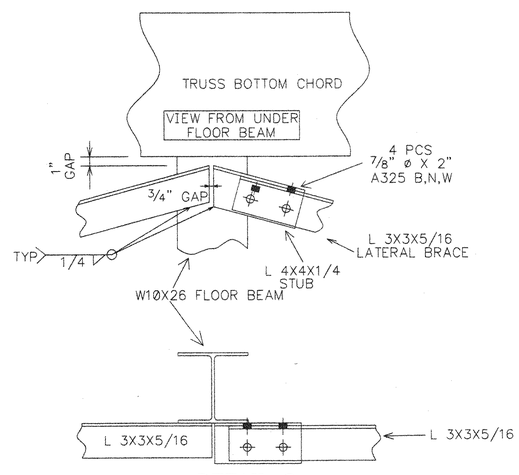

DETAIL 2
LATERAL BRACE DETAIL
4 LOCATIONS AS SHOWN
AT TRUSS BOLTED CONNECTION PANELS

NOTE: DRAWINGS RELATIVE (DO NOT SCALE)

RECEIVED
CK'D BY MEM OK'D BY
APR 23 2003
RESUBMIT X APPROVED
BY DATE 9/29/03

NO.	DATE	REVISIONS	BY

564' X 12' THREE SPAN PEDESTRIAN BRIDGE
BURLINGTON – COLCHESTER
SPAN 3 – 219'-6"
CHITTENDEN COUNTY, VERMONT

DESIGN	DRAWN	DATE	DRAWING NO.	SHEET
SAF	SAF	MAR. 27, 2003	BURLINGTON 104	15 OF 18
CHECK/DATE	FABRICATOR US BRIDGE			