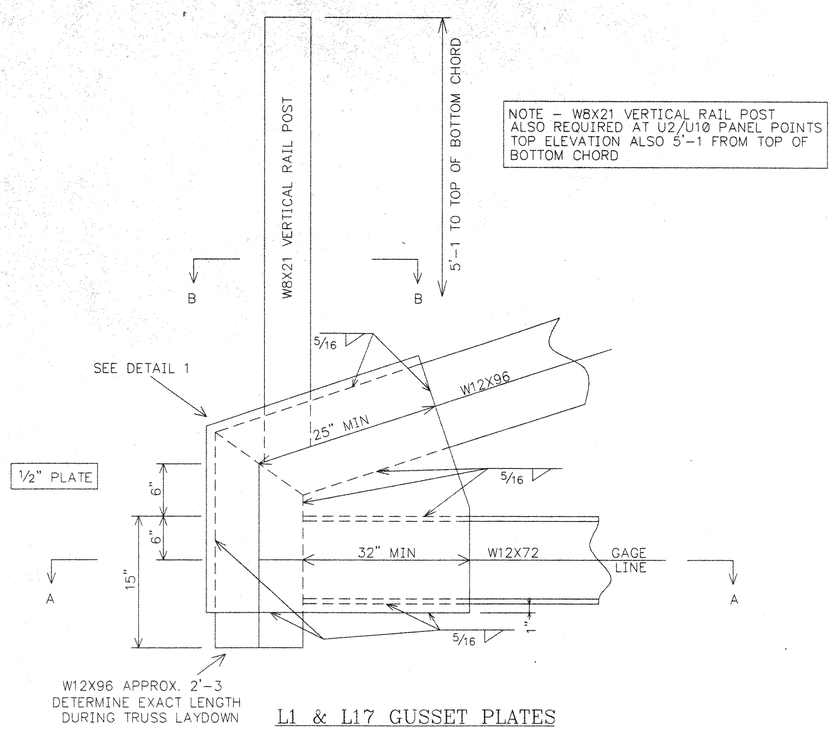

L1 & L17 GUSSET PLATES

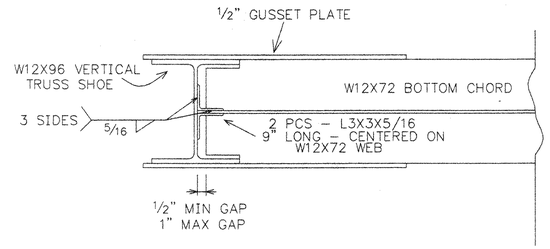

SECTION A–A

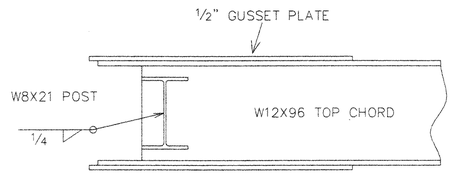

SECTION B–B

DETAIL SIMILAR AT U2 PANEL POINT

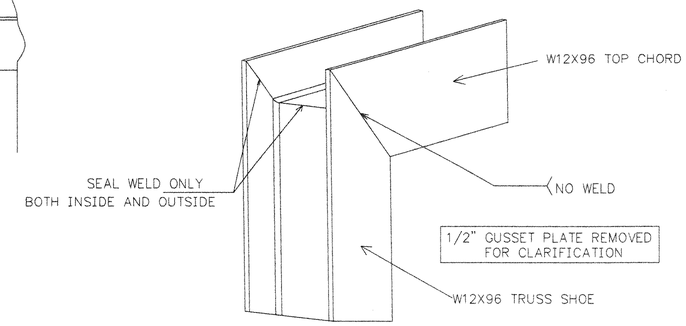

DETAIL 1

TRUSS SHOE TO TOP CHORD CONNECTION
2 LOCATIONS

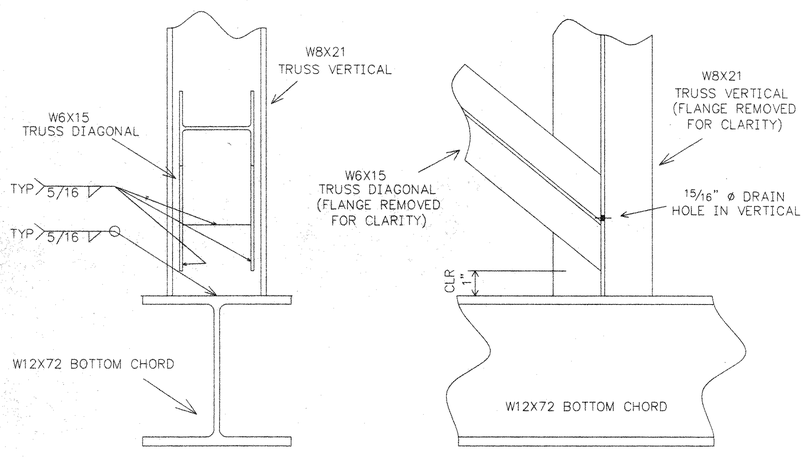

WELD DETAILS AT BOTTOM CHORD PANEL POINTS

VERTICAL AND DIAGONAL CONNECTIONS AT BOTTOM CHORD
12 LOCATIONS
1 SIMILAR LOCATION (2 DIAGONALS)
2 SIMILAR LOCATIONS (VERTICAL ONLY)

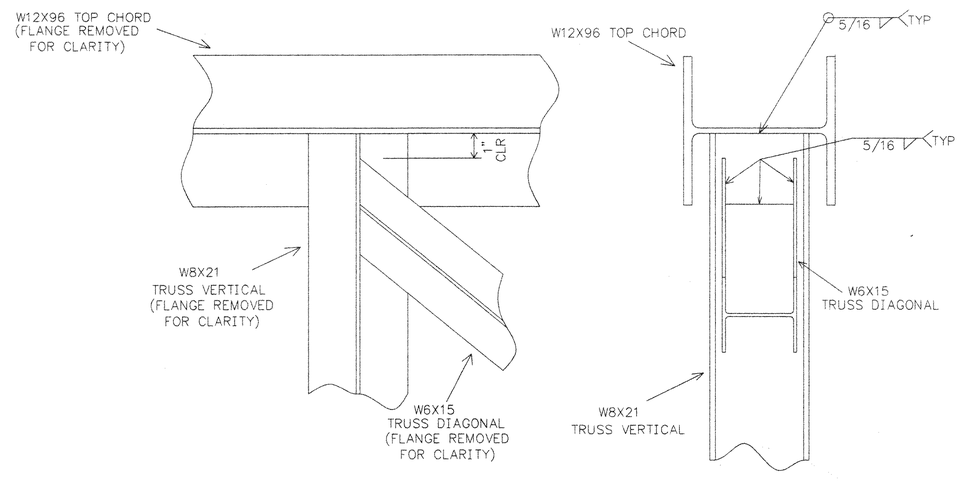

WELD DETAILS AT TOP CHORD PANEL POINTS

VERTICAL AND DIAGONAL CONNECTIONS AT TOP CHORD
14 LOCATIONS
1 SIMILAR LOCATION (NO DIAGONAL)

RECEIVED
CK'D BY MGM OK'D BY
APR 23 2003
RESUBMIT APPROVED
BY DATE 4/29/03

NOTE: DRAWINGS RELATIVE (DO NOT SCALE)

NO.	DATE	REVISIONS	BY

564' X 12' THREE SPAN PEDESTRIAN BRIDGE
BURLINGTON – COLCHESTER
SPAN 2 – 219'-6"
CHITTENDEN COUNTY, VERMONT

DESIGN	DRAWN	DATE	DRAWING NO.	SHEET
SAF	SAF	MAR. 26, 2003	BURLINGTON 100	11 OF 18
CHECK/DATE	FABRICATOR US BRIDGE			