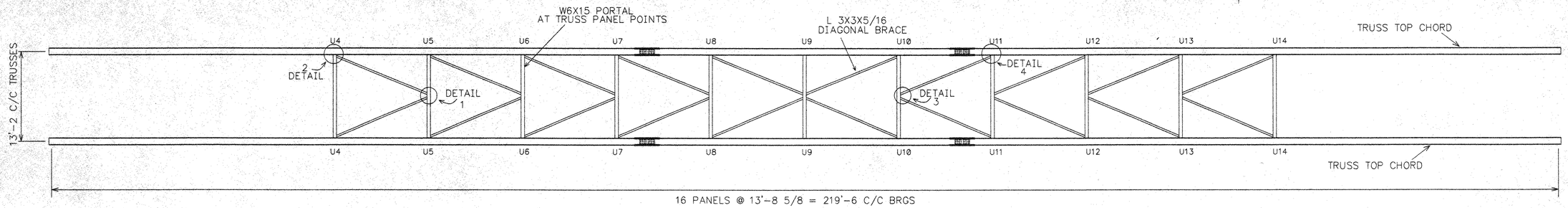

BRIDGE PORTAL DETAILS

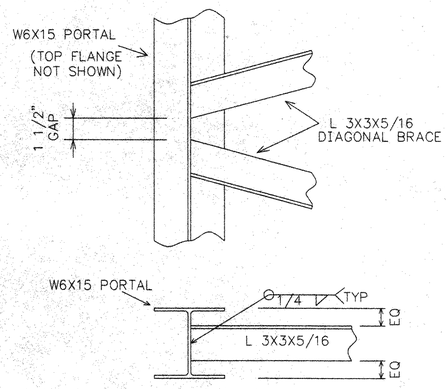

DETAIL 1

WELDED DIAGONAL BRACE CONNECTION
8 LOCATIONS

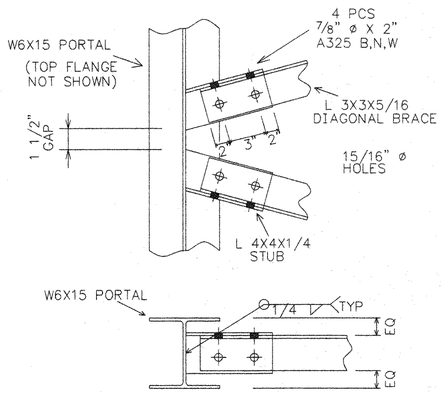

DETAIL 3

BOLTED DIAGONAL BRACE CONNECTION
AT TRUSS BOLTED BAY LOCATIONS
2 LOCATIONS

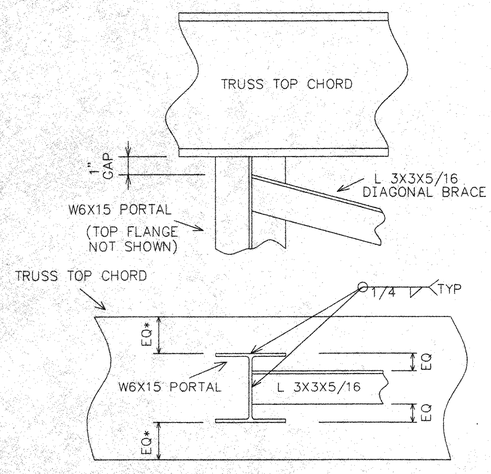

DETAIL 2

WELDED DIAGONAL BRACE AND PORTAL CONNECTION
16 LOCATIONS

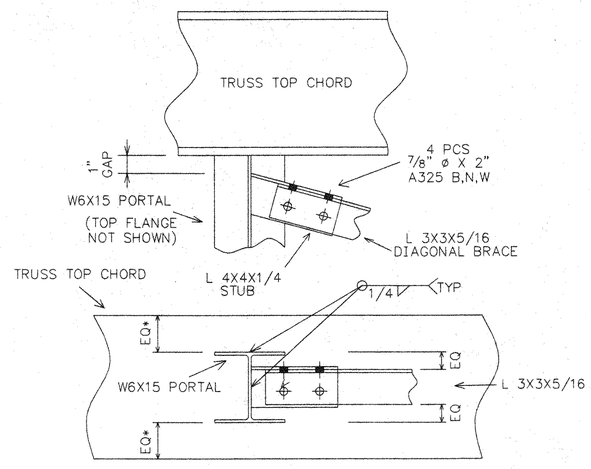

DETAIL 4

BOLTED DIAGONAL BRACE CONNECTION
AT TRUSS BOLTED BAY LOCATIONS
4 LOCATIONS

RECEIVED
CK'D BY MEM CK'D BY
APR 2 3 2003
RESUBMIT APPROVED ✓
BY DATE 4/29/03

NOTE: DRAWINGS RELATIVE (DO NOT SCALE)

NO.	DATE	REVISIONS	BY

564' X 12' THREE SPAN PEDESTRIAN BRIDGE
BURLINGTON – COLCHESTER
SPAN 2 – 219'-6"
CHITTENDEN COUNTY, VERMONT

DESIGN	DRAWN	DATE	DRAWING NO.	SHEET
SAF	SAF	MAR. 26, 2003	BURLINGTON	
CHECK/DATE	FABRICATOR US BRIDGE		099	10 OF 18