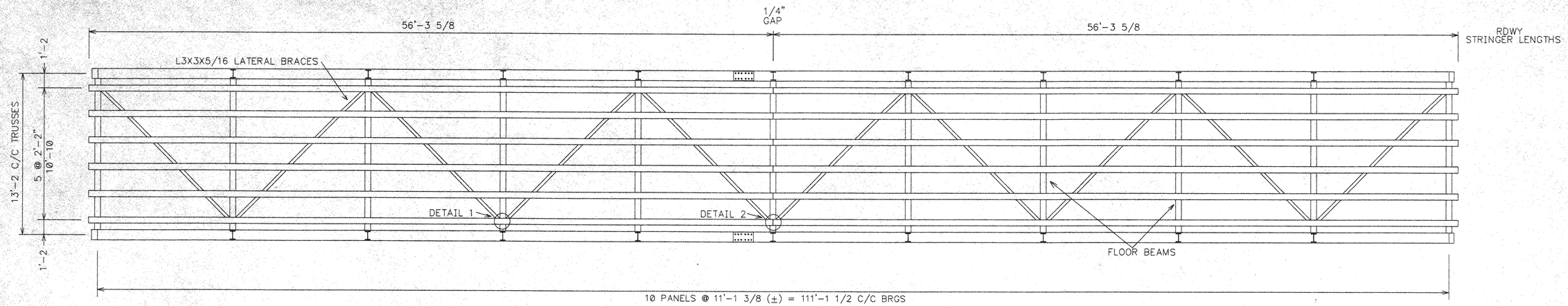

BRIDGE FLOOR FRAMING PLAN

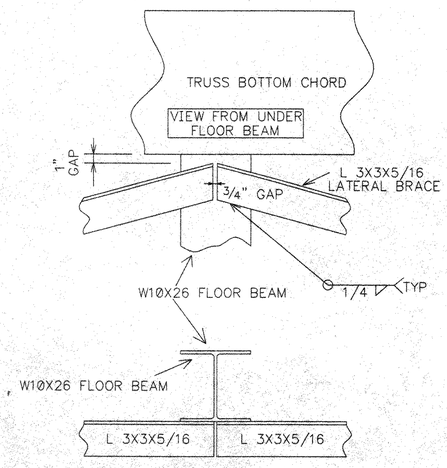

DETAIL 1
LATERAL BRACE DETAIL
7 LOCATIONS AS SHOWN
2 LOCATIONS SIMILAR (1 LATERAL)

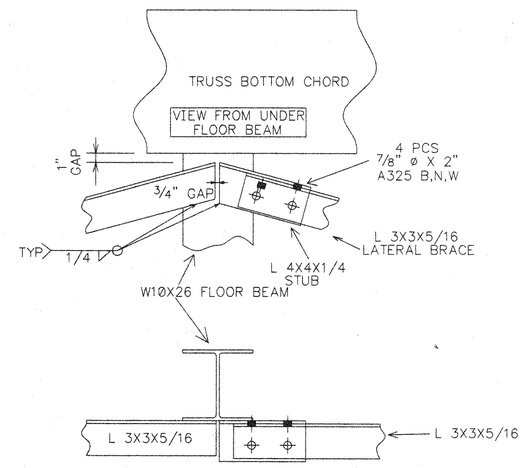

DETAIL 2
LATERAL BRACE DETAIL
2 LOCATIONS AS SHOWN
AT TRUSS BOLTED CONNECTION PANELS

RECEIVED
CK'D BY MEM CK'D BY
APR 2 3 2003
RESUBMIT APPROVED
BY DATE 4/25/03

NOTE: DRAWINGS RELATIVE (DO NOT SCALE)

NO.	DATE	REVISIONS	BY

564' X 12' THREE SPAN PEDESTRIAN BRIDGE
BURLINGTON – COLCHESTER
SPAN 1 – 111'-1 1/2"
CHITTENDEN COUNTY, VERMONT

DESIGN	DRAWN	DATE	DRAWING NO.	SHEET
SAF	SAF	MAR. 13, 2003	BURLINGTON 094	5 OF 18
CHECK/DATE	FABRICATOR US BRIDGE			