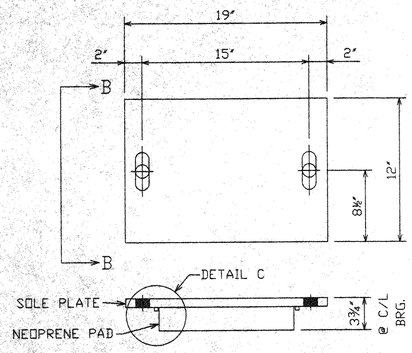

TRUSS BEARING PLATES
SPAN 1- 111'-0" TRUSS

FIXED BEARINGS
SOLE PLATE - 2 PCS - PL 1 5/8' X 12' X 19 ' WITH 1 5/8'ø HOLES (BEVELED)
NEOPRENE PAD - 2 PCS - 2 1/2' X 10' X 12'

EXPANSION BEARINGS
SOLE PLATE - 2 PCS - PL 1 5/8' X 12' X 19' WITH 1 5/8' X 4 1/2' HOLES (BEVELED)
NEOPRENE PAD - 2 PCS - 2 1/2 ' X 10' X 12'

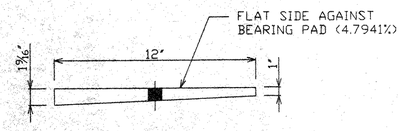

SECTION B-B

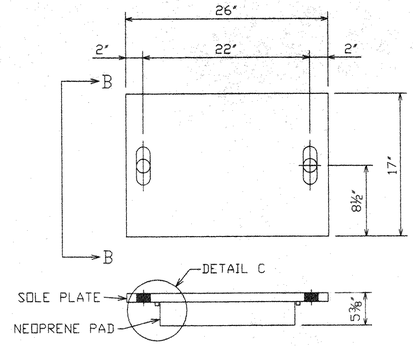

TRUSS BEARING PLATES
SPAN 2- 219'-6" TRUSS

FIXED BEARINGS
SOLE PLATE - 2 PCS - PL 1 1/4' X 17 X 26' WITH 1 5/8'ø HOLES
NEOPRENE PAD - 2 PCS - 4 1/8' X 14' X 18'

EXPANSION BEARINGS
SOLE PLATE - 2 PCS - PL 1 1/4' X 17' X 26' WITH 1 5/8' X 4 1/2' HOLES
NEOPRENE PAD - 2 PCS - 4 1/8' X 14' X 18'

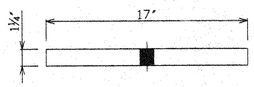

SECTION B-B

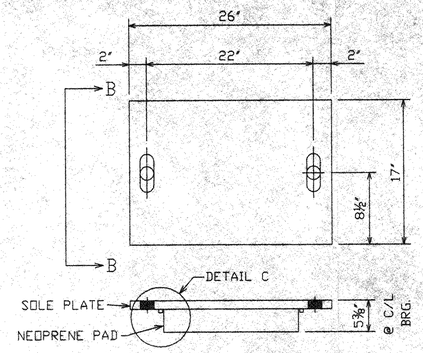

TRUSS BEARING PLATES
SPAN 3- 219'-6" TRUSS

FIXED BEARINGS
SOLE PLATE - 2 PCS - PL 1 5/8' X 17 X 26' WITH 1 5/8'ø HOLES (BEVELED)
NEOPRENE PAD - 2 PCS - 4 1/8' X 14' X 18'

EXPANSION BEARINGS
SOLE PLATE - 2 PCS - PL 1 5/8' X 17 X 26' WITH 1 5/8' X 4 1/2' HOLES (BEVELED)
NEOPRENE PAD - 2 PCS - 4 1/8' X 14' X 18'

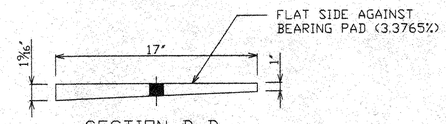

SECTION B-B

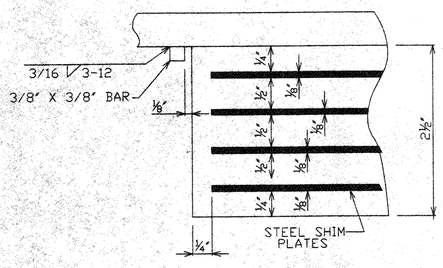

DETAIL C

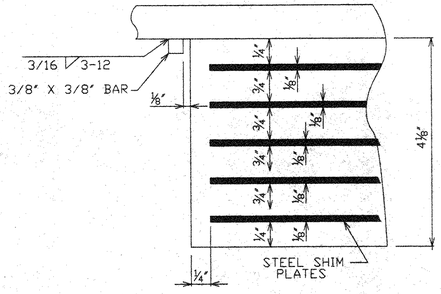

DETAIL C

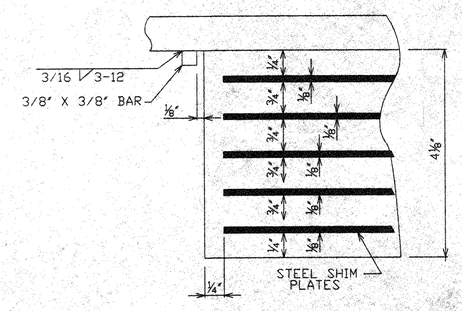

DETAIL C

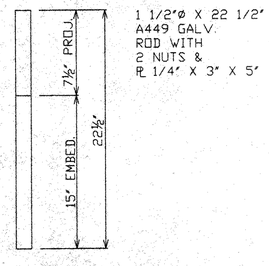

TRUSS ANCHOR BOLT
8 REQ'D

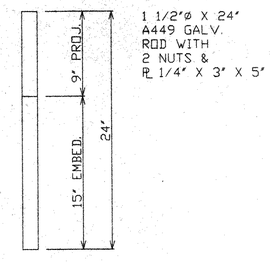

TRUSS ANCHOR BOLT
8 REQ'D

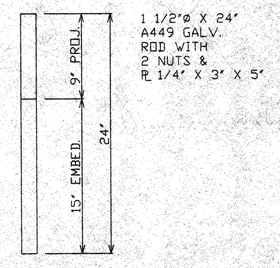

TRUSS ANCHOR BOLT
8 REQ'D

NOTE: DRAWINGS RELATIVE DO NOT SCALE

RECEIVED
CK'D BY Mon OK'D BY
SEP 09 2003
RESUBMIT APPROVED
BY DATE 9/12/03

NO.	DATE	REVISIONS	BY
1	09/02/03	CHANGE BRG. SIZES	RES.

564' X 12' THREE SPAN PEDESTRIAN BRIDGE
BEARING & ABUTMENT DETAILS
BURLINGTON - COLCHESTER BIKE PATH
CHITTENDEN COUNTY, VERMONT

DESIGN	DRAWN	DATE	DRAWING NO.	SHEET
SAF	RES	AUG. 04, 2003	VERMONT 088	1 OF 2
CHECK/DATE SAF	FABRICATOR US BRIDGE			