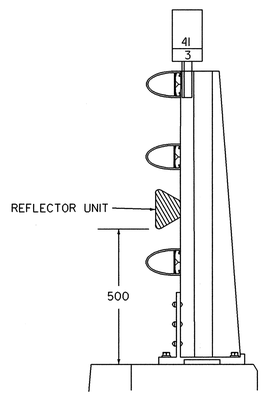

BARRIER RAIL SECTION A-A

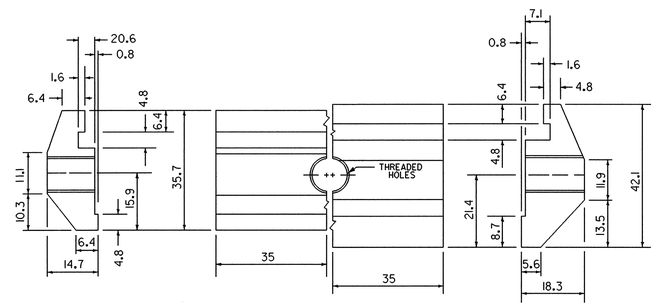

HAND RAIL SECTION
(2 REQUIRED)

DETAIL "A"
TOTAL LENGTH 70 mm
ASTM B 221M ALLOY 6061-T6 OR 6061 T5

BARRIER RAIL SECTION
(2 REQUIRED)

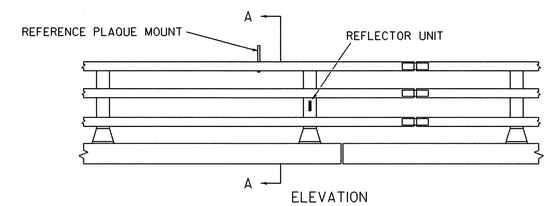

ELEVATION

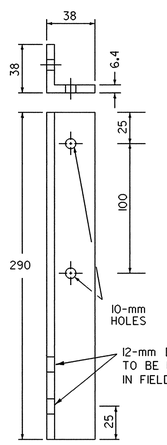

DETAIL "B"
ALUMINUM ANGLE
ASTM B 308/M 308M ALLOY 6061-T6

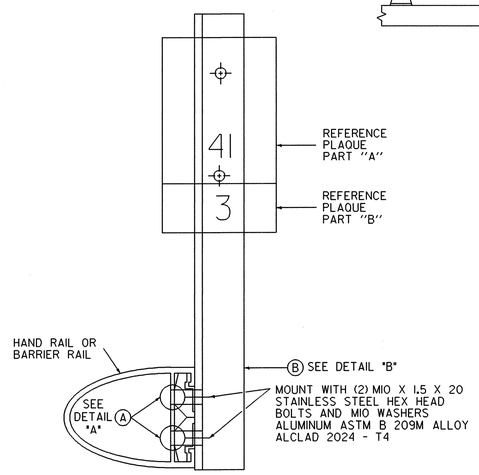

DETAIL FOR MOUNTING ON ALUMINUM BRIDGE RAIL

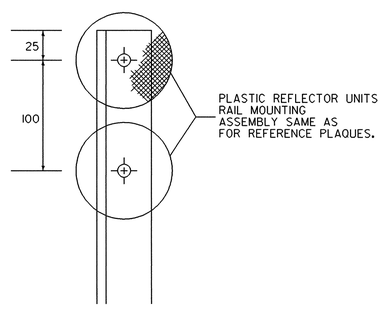

TYPE II DELINEATOR

TYPE II DELINEATORS WILL BE RAIL MOUNTED AT 30-m SPACING WHERE ACCELERATION OR DECELERATION LANES ARE CARRIED ACROSS STRUCTURES. ALSO SEE STANDARD E-198M.

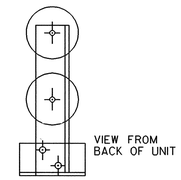

TYPE II DELINEATOR

TYPE II DELINEATORS WILL BE RAIL MOUNTED AT 30-m SPACING WHERE ACCELERATION OR DECELERATION LANES ARE CARRIED ACROSS STRUCTURES. ALSO SEE STANDARD E-198M.

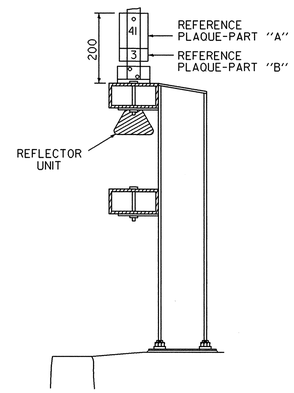

BARRIER RAIL SECTION A-A

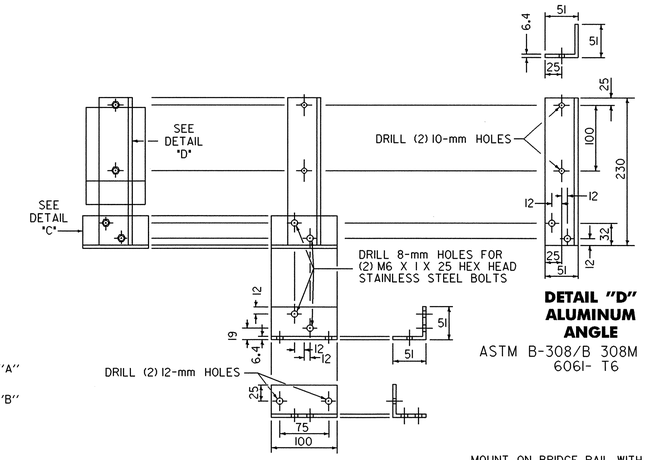

DETAIL "D"
ALUMINUM ANGLE
ASTM B-308/B 308M ALLOY 6061- T6

DETAIL "C"
ALUMINUM ANGLE
ASTM B-308/B 308M ALLOY 6061- T6

MOUNT ON BRIDGE RAIL WITH (2) M10 X 1.5 X 30 STAINLESS STEEL SELF TAPPING SCREWS AND M10 (20 O.D. x 11 I.D. x 1.6 THICK) WASHER. ALUMINUM ASTM B-209M ALLOY ALCLAD 2024-T4.

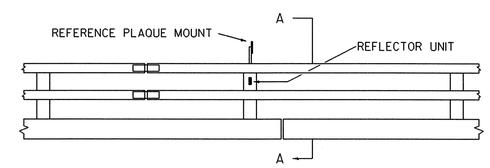

ELEVATION

DETAIL FOR MOUNTING ON BOX BEAM BRIDGE RAIL

THE REFLECTOR UNIT IS TO BE INSTALLED EVERY 9 m OR ON CLOSEST POST.

NOT TO SCALE

OTHER STDS. E-198M REQUIRED:

NOTE: ALL DIMENSIONS ARE IN MILLIMETERS (mm) EXCEPT WHERE NOTED.

REVISIONS AND CORRECTIONS

JUNE 13, 1997 - ORIGINAL APPROVAL DATE

APPROVED

DIRECTOR OF ENGINEERING

DIRECTOR OF CONSTRUCTION AND MAINTENANCE

FREEWAY - EXPRESSWAY DELINEATOR AND REFERENCE PLAQUE MOUNTING ON BRIDGE RAIL

VERMONT AGENCY OF TRANSPORTATION

VAOT Metric STANDARD E-199 M