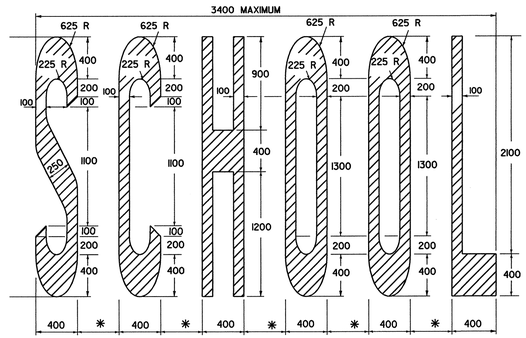


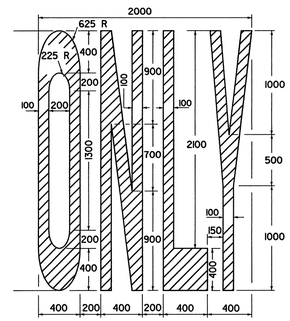


* (100 mm TO 200 mm) - ADJUST TO AVAILABLE PAVEMENT WIDTH

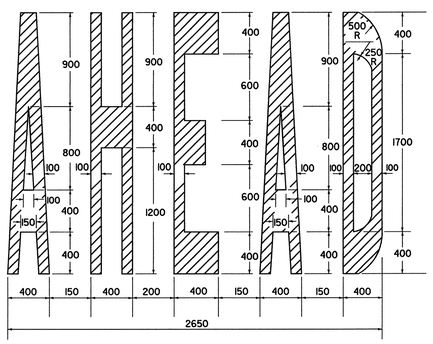


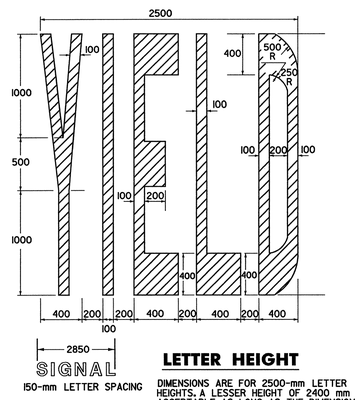


150-mm LETTER SPACING

## LETTER HEIGHT

DIMENSIONS ARE FOR 2500-mm LETTER HEIGHTS. A LESSER HEIGHT OF 2400 mm IS ACCEPTABLE AS LONG AS THE DIMENSIONS ARE PROPORTIONAL TO THE DETAILS SHOWN. SEE NOTE BELOW.

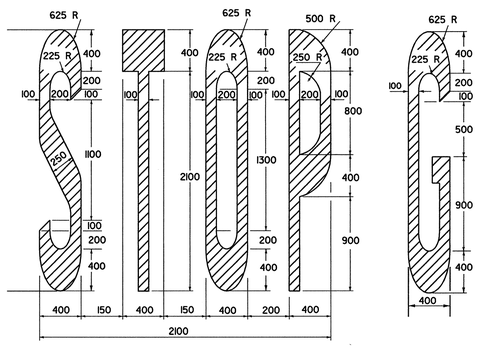


THE LETTER "G" PERTAINS TO THE WORD "SIGNAL" FOR OTHER LETTERS, SEE ABOVE.

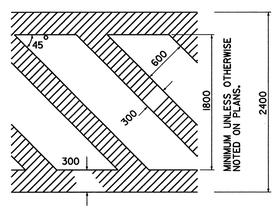


ARROWS AND WORD MARKINGS THAT CONFORM TO THE DIMENSIONS SHOWN ON THIS SHEET OR AS DETAILED IN THE BOOKLET ENTITLED "STANDARD ALPHABETS FOR HIGHWAY SIGNS AND PAVEMENT MARKINGS" AND THE MUTCD (CURRENT EDITION) PREPARED BY THE FHWA WILL BE ACCEPTABLE.

## LETTER IN WORD MARKING AND CROSSWALK DETAILS

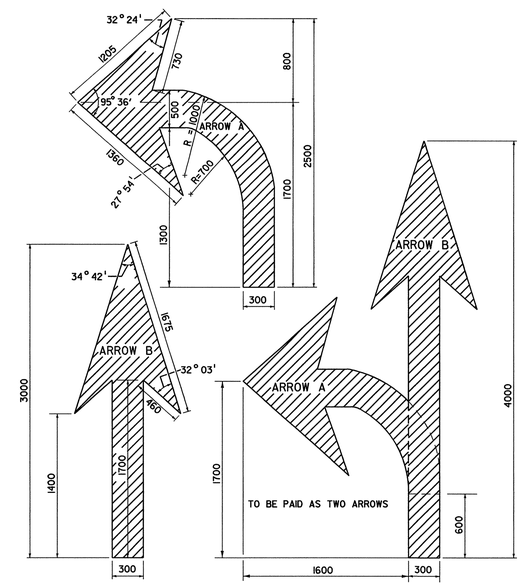


## ARROW DETAILS

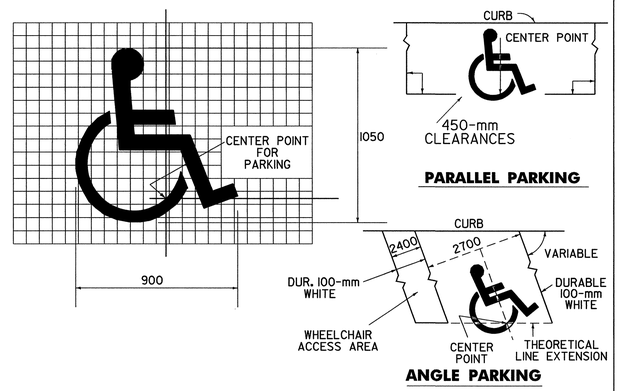


## HANDICAPPED PAVEMENT MARKING DETAILS

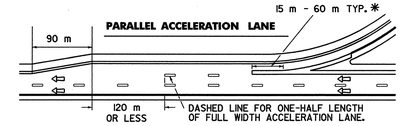


* USE LONGER LENGTH TO EMPHASIZE SITUATIONS WHERE THE CROSSING REQUIRES UNUSUAL CARE SUCH AS HIGH VOLUME MERGE AREAS.

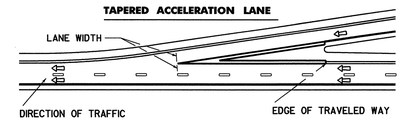


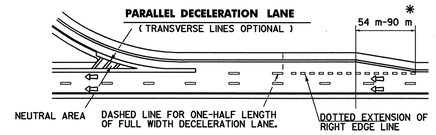


* SHORTER TAPERS GIVE A BETTER TARGET VALUE, HOWEVER ALIGNMENT MAY DICTATE A LONGER TAPER. RESIDENT ENGINEER SHALL ESTIMATE LENGTH.

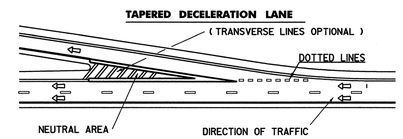


TRANSVERSE LINES SHALL CONSIST OF WHITE LINES 2 TIMES WIDER THAN THE MAIN LINE MARKING WIDTH SPACED 1500 mm C-C AND SET AT 45° TO MAIN LINE EDGE LINES. THESE MARKINGS SHALL BE USED TO INCREASE VISIBILITY DUE TO DIFFICULT VERTICAL OR HORIZONTAL ALIGNMENT, AS DIRECTED BY THE RESIDENT ENGINEER.

## RAMP MARKINGS

### LEGEND

- WHITE LINES
- YELLOW LINES
- CHANNELIZATION WHITE LINES
- WHITE DOTTED LINES
- DIRECTION OF TRAFFIC FLOW

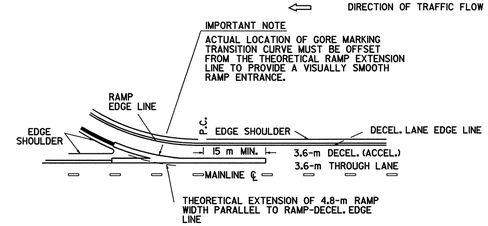


## DETAIL - GORE MARKING TRANSITION CURVE

THIS SHEET IS NOT TO SCALE

OTHER STDS. REQUIRED:

NOTE: ALL DIMENSIONS ARE IN MILLIMETERS (mm) EXCEPT WHERE NOTED.

REVISIONS AND CORRECTIONS

JUNE 13, 1997 - ORIGINAL APPROVAL DATE
FEB. 1, 1999 - CHANGED NOTES FOR ACCELERATION & DECELERATION LANES

APPROVED

DIRECTOR OF PROJECT DEVELOPMENT

# PAVEMENT MARKING DETAILS

VERMONT AGENCY OF TRANSPORTATION

Metric STANDARD E-191M