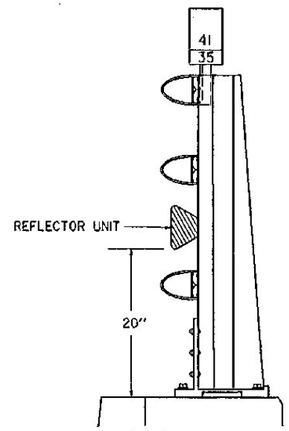

BARRIER RAIL SECTION A-A

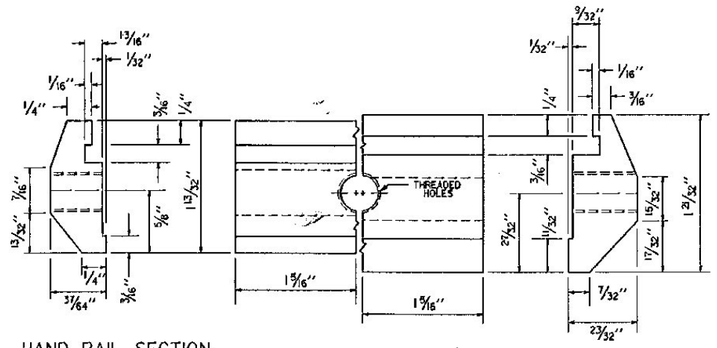

HAND RAIL SECTION
(2 REQUIRED)

DETAIL "A"
TOTAL LENGTH 2 5/8"
ASTM B-221 ALLOY 6061-T6 OR 6061-T5

BARRIER RAIL SECTION
(2 REQUIRED)

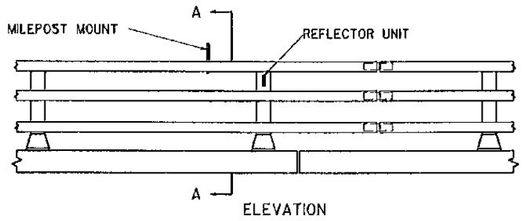

ELEVATION

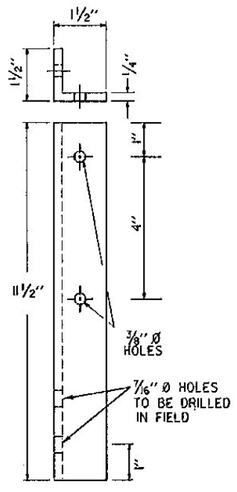

DETAIL "B"
ALUMINUM ANGLE
ASTM B - 308 ALLOY 6061-T6

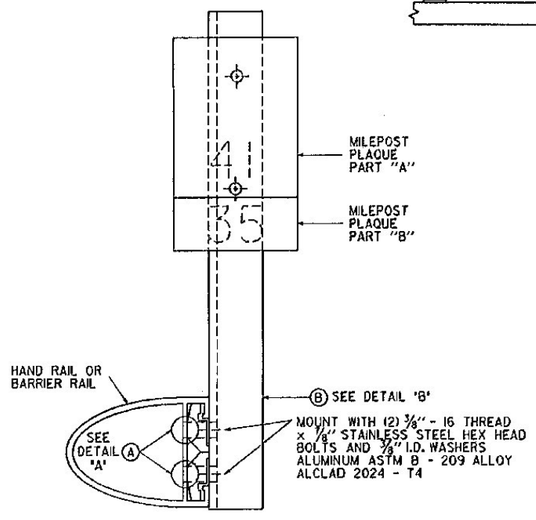

DETAIL FOR MOUNTING ON ALUMINUM BRIDGE RAIL

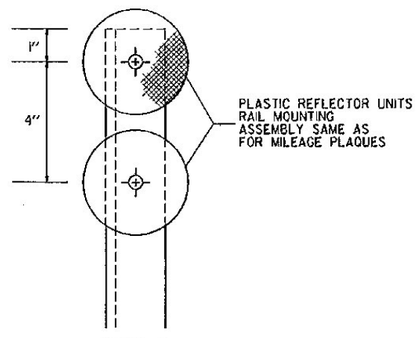

TYPE II
DELINEATOR

TYPE II DELINEATORS WILL BE RAIL MOUNTED AT ONE-HUNDRED FOOT SPACING WHERE ACCELERATION OR DECELERATION LANES ARE CARRIED ACROSS STRUCTURES. ALSO SEE STANDARD E-198

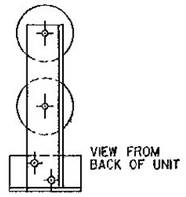

TYPE II
DELINEATOR

TYPE II DELINEATORS WILL BE RAIL MOUNTED AT ONE-HUNDRED FOOT SPACING WHERE ACCELERATION OR DECELERATION LANES ARE CARRIED ACROSS STRUCTURES. ALSO SEE STANDARD E-198

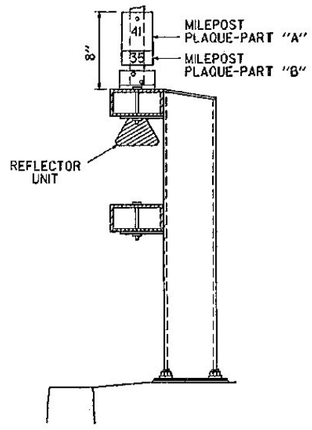

BARRIER RAIL
SECTION A-A

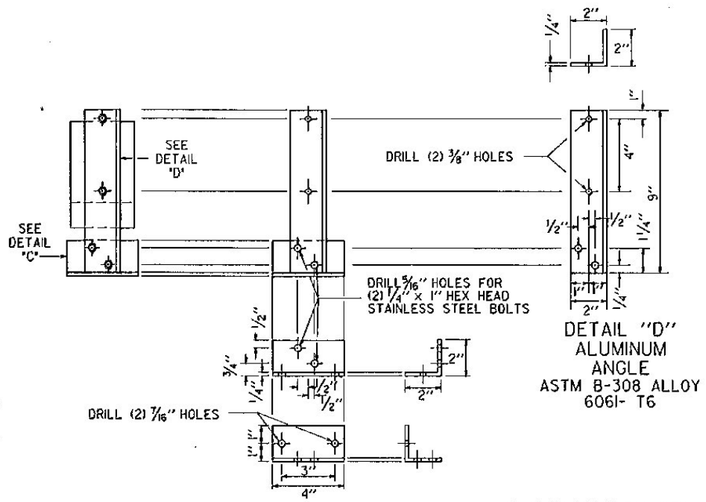

DETAIL "D"
ALUMINUM
ANGLE
ASTM B-308 ALLOY
6061- T6

DETAIL "C"
ALUMINUM ANGLE
ASTM B-308 ALLOY 6061 T6

MOUNT ON BRIDGE RAIL WITH (2) 3/8" x 1 1/4" STAINLESS STEEL SELF TAPPING SCREWS AND 3/4 " O.D. x 3/8" I.D. x 1/16" THICK WASHER, ALUMINUM ASTM B-209 ALLOY ALCLAD 2024-T4.

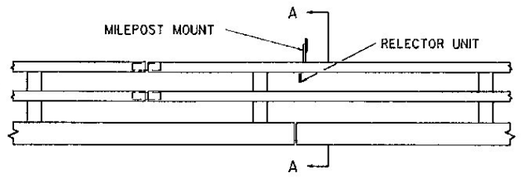

ELEVATION

DETAIL FOR MOUNTING ON BOX BEAM BRIDGE RAIL

REVISIONS AND CORRECTIONS	APPROVED	SEPT. 10, 1987 DATE David B Kelley CHIEF ENGINEER Arthur Jones DIRECTOR OF PLANNING AND PRE-CONSTRUCTION Gordon B. MacArthur TRAFFIC AND SAFETY ENGINEER	DELINEATOR AND MILEPOST MOUNTING ON BRIDGE RAIL	VERMONT AGENCY OF TRANSPORTATION	STANDARD E-199