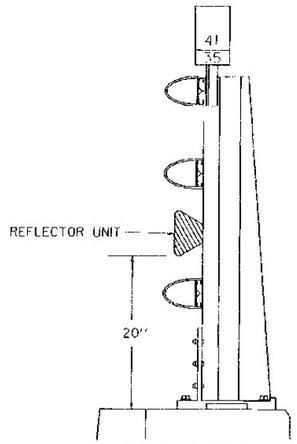

BARRIER RAIL SECTION A-A

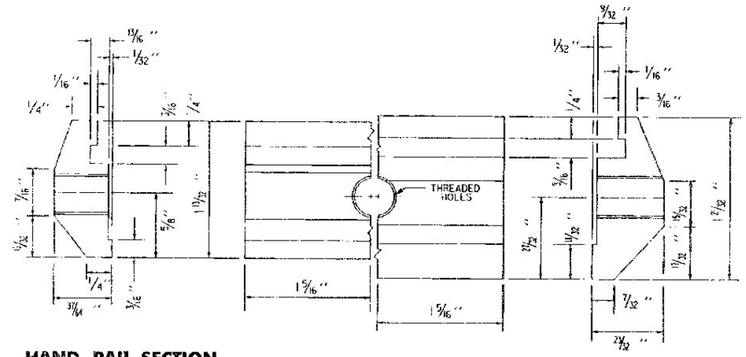

HAND RAIL SECTION
(2 REQUIRED)

DETAIL "A"
TOTAL LENGTH 2 5/8"
ASTM B-221 ALLOY 6061-T6 OR 6061-T5

BARRIER RAIL SECTION
(2 REQUIRED)

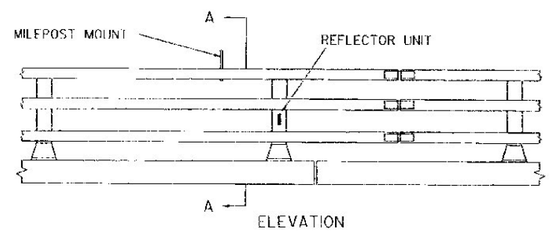

ELEVATION

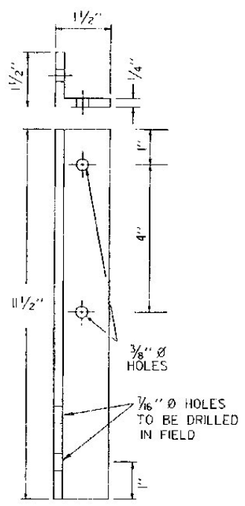

DETAIL "B"
ALUMINUM ANGLE
ASTM B - 308 ALLOY 6061-T6

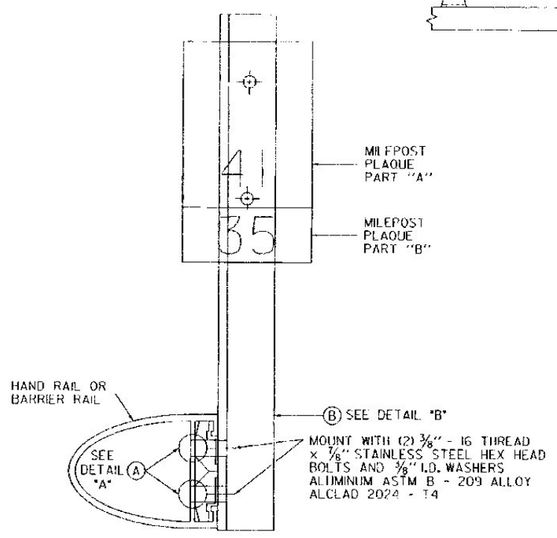

DETAIL FOR MOUNTING ON ALUMINUM BRIDGE RAIL

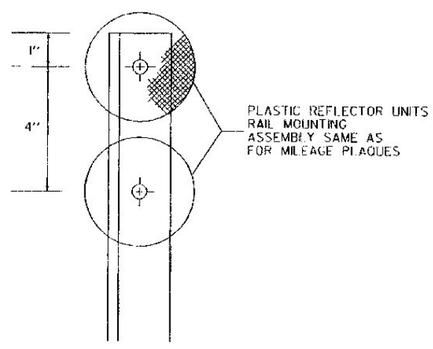

TYPE II
DELINEATOR

TYPE II DELINEATORS WILL BE RAIL MOUNTED AT ONE-HUNDRED FOOT SPACING WHERE ACCELERATION OR DECELERATION LANES ARE CARRIED ACROSS STRUCTURES. ALSO SEE STANDARD E-198

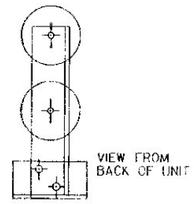

TYPE II
DELINEATOR

TYPE II DELINEATORS WILL BE RAIL MOUNTED AT ONE-HUNDRED FOOT SPACING WHERE ACCELERATION OR DECELERATION LANES ARE CARRIED ACROSS STRUCTURES. ALSO SEE STANDARD E-198

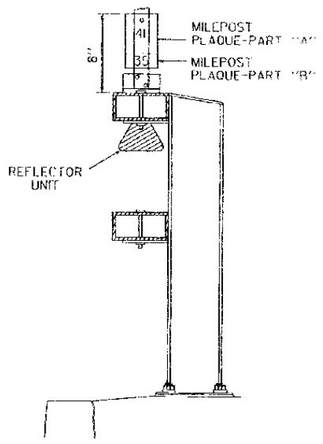

BARRIER RAIL SECTION A-A

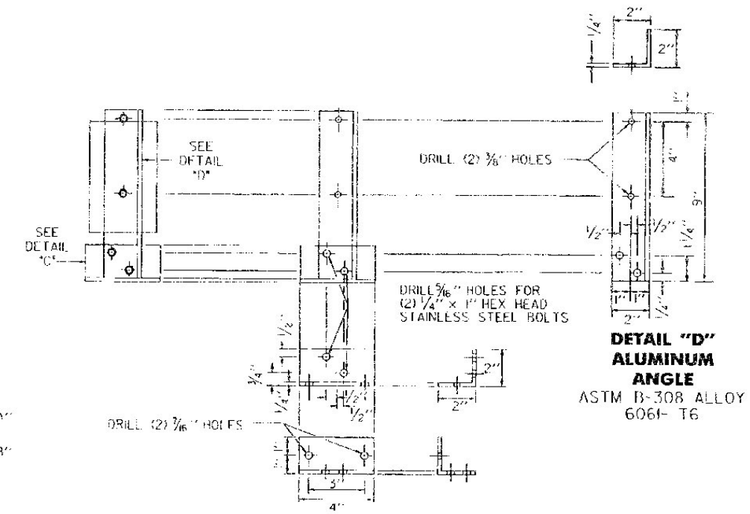

DETAIL "D"
ALUMINUM ANGLE
ASTM B-308 ALLOY 6061- T6

DETAIL "C"
ALUMINUM ANGLE
ASTM B-308 ALLOY 6061 T6

MOUNT ON BRIDGE RAIL WITH (2) 3/8" x 1 1/4" STAINLESS STEEL SELF TAPPING SCREWS AND 3/4" O.D. x 3/8" I.D. x 1/16" THICK WASHER. ALUMINUM ASTM B-209 ALLOY ALCLAD 2024-T4.

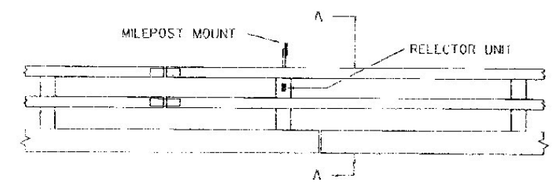

ELEVATION

DETAIL FOR MOUNTING ON BOX BEAM BRIDGE RAIL

THE REFLECTOR UNIT IS TO BE INSTALLED EVERY 30 FEET ON OR CLOSEST POST.

NOT TO SCALE	OTHER STDS. REQUIRED:

REVISIONS AND CORRECTIONS

SEPT. 10, 1987 - DATE OF ORIGINAL ISSUE
AUG. 18, 1995 REVISED REFLECTOR UNIT LOCATION AND ADDED NOTE.

APPROVED FOR THIS PROJECT AND/OR DESIGN IMPLEMENTATION. FHWA FINAL APPROVAL PENDING.

APPROVED

DIRECTOR OF ENGINEERING

TRAFFIC AND SAFETY ENGINEER

FREEWAY - EXPRESSWAY DELINEATOR AND MILEPOST MOUNTING ON BRIDGE RAIL

/traf/std/stdel99.dgn : stdel99.i

VERMONT AGENCY OF TRANSPORTATION

STANDARD
E-199