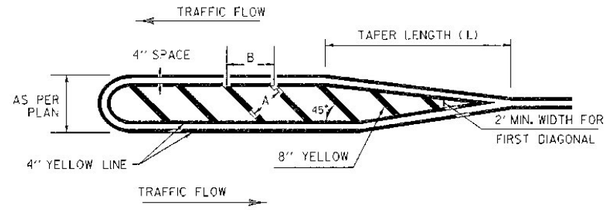

PAINTED ISLAND DETAIL

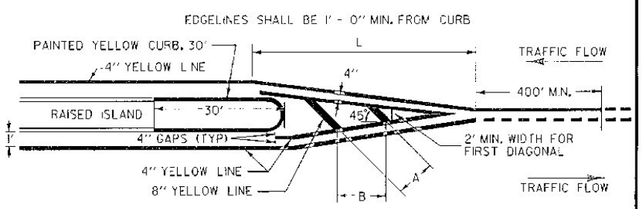

ISLAND APPROACH MARKINGS

DIMENSIONS		CONDITIONS FOR USE	
A	B		
5'	7'	LOW SPEED OR HIGH SPEED/W POOR SIGHT DISTANCE, <200'	WHERE LENGTH OF DIAGONAL AREA IS 75' MAX.
10'	14'	HIGH SPEED AND GOOD SIGHT DISTANCE, ≥200'	WHERE LENGTH OF DIAGONAL AREA EXCEEDS 75'

TAPER LENGTH NOTES

1. FOR SPEEDS 45 MPH OR MORE, L = S X W
2. FOR SPEEDS 40 MPH OR LESS, L = W S^2 /60
   S = 85TH PERCENTILE SPEED OR POSTED SPEED LIMIT IN MILES PER HOUR.
   W = OFFSET DISTANCE IN FEET
3. MINIMUM LENGTH OF TAPER = (L) — L = 100 FEET IN URBAN AREA; L = 200 FEET IN RURAL AREAS
4. LENGTH "L" CAN BE EXTENDED AS REQUIRED TO IMPROVE VISIBILITY OR TO PROVIDE A SMOOTHER TRANSITION

NOTE:

A SOLID LINE IN THE DIRECTION OF TRAVEL IS BEGUN AT A LOCATION 400 FEET MIN. IN ADVANCE OF THE BEGIN TAPER FOR THE PAVEMENT WIDTH TRANSITION.

PASSING ZONE SHOWN FOR REFERENCE ONLY, ACTUAL MARKINGS BASED ON FIELD CONDITIONS.

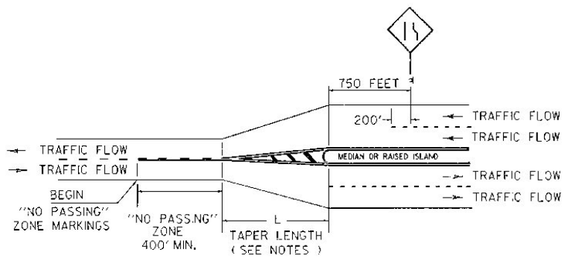

"NO PASSING" ZONE LAYOUT IN PAVEMENT WIDTH TRANSITIONS, TWO LANE HIGHWAY TO DIVIDED HIGHWAY

THE FOLLOWING GUIDELINES WILL BE USED WHEN PAINTING ISLAND ON STATE HIGHWAYS AND RECOMMENDED FOR ISLANDS ON OTHER SYSTEMS WITHIN THE STATE.

I. PAINTING: ISLANDS WHICH ARE FOUR FEET IN WIDTH AND TRIANGLE ISLANDS WHICH ARE LESS THAN FOUR HUNDRED AND FIFTY SQUARE FEET SHALL BE PAINTED ENTIRELY. TRIANGLES WHICH ARE FOUR HUNDRED AND FIFTY SQUARE FEET AND LARGER SHALL BE PAINTED WITH A FOUR FOOT BORDER AS SHOWN ON FIGURE "A" OF THE PAINTED ISLAND DETAIL.

II. SIGNS: ALL APPROACH NOSES TO THE ISLANDS IN THE LINE OF TRAFFIC WILL BE SIGNED WITH A KEEP RIGHT (R-47) SIGN AS WELL AS OBJECT MARKERS PLACED BACK TO BACK TO INDICATE THE BEGINNING (END) OF THE ISLAND.

III. EXCEPTIONS: THERE WILL BE SPECIAL CASES WHICH REQUIRE AN EXCEPTION TO, OR MODIFICATION OF THIS GUIDELINE. THESE QUESTIONS SHOULD BE REFERRED TO THE TRAFFIC AND SAFETY ENGINEER OR HIS DELEGATED REPRESENTATIVE.

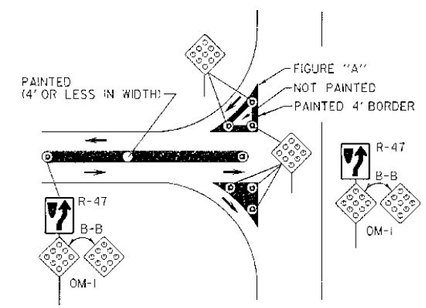

PAINTED ISLANDS

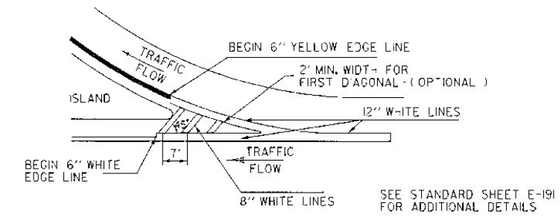

GORE MARKING DETAIL - EXIT

TRANSVERSE LINES

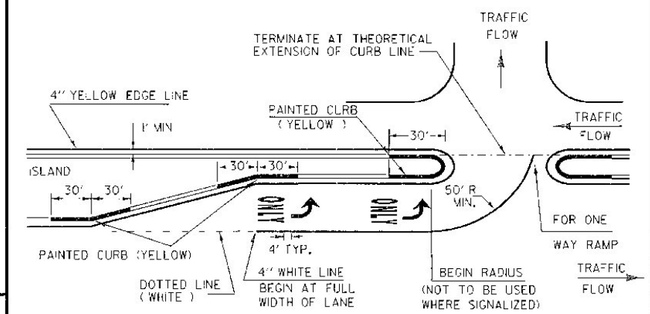

TURN LANE AND PAINTED CURB DETAIL

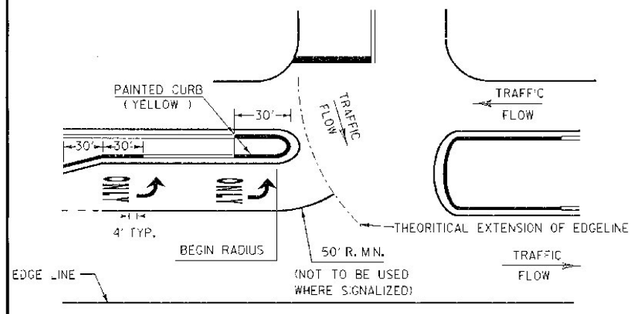

CURB PAINTING: CURB SHALL BE PAINTED ON THE ISLAND NOSE AND TO A POINT 30 FEET FROM THE END OF THE ISLAND. IN ADDITION, CURB SHALL BE PAINTED 30 FEET FROM ANY CHANGE IN CURB DIRECTION.

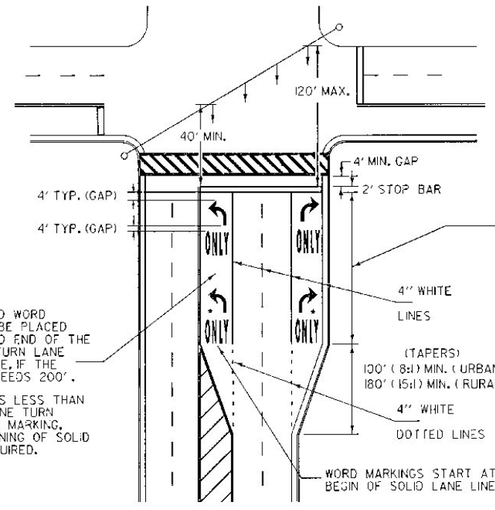

TURN ARROWS AND WORD MARKINGS SHALL BE PLACED AT THE BEGIN AND END OF THE LEFT (OR RIGHT) TURN LANE AND IN THE MIDDLE, IF THE LANE LENGTH EXCEEDS 200'.

* IF LANE LENGTH IS LESS THAN 100 FEET, ONLY ONE TURN ARROW AND WORD MARKING, PLACED AT BEGINNING OF SOLID LANE LINE, IS REQUIRED.

EXCLUSIVE TURN LANES (LEFT OR RIGHT) LANE LINES SHALL BE SOLID AND EXTEND BACK FROM THE STOP LINE TO THE POINT OF FULL LANE WIDTH OF THE TURN LANE.

THE MINIMUM STORAGE LENGTH IS 50'.

I. STORAGE LENGTH REQUIRED
   A. UNSIGNALIZED
      VOL OF LT (HR) ÷ CYCLES/HR. X 2 X 25'/VEH.
      (ASSUME A 60 SEC. CYCLE)
   B. SIGNALIZED
      1. ESTIMATED -- USE ABOVE WITH ACTUAL CYCLE LENGTH.
      2. PREFERRED METHOD -- HIGHWAY CAPACITY MANUAL, APPENDIX I.

II. ADDITIONAL STORAGE LENGTH TO BE PROVIDED FOR DECELERATION.
   (TAPER/DECEL. FROM CHART) - (MIN. TAPER) - 1/2 (STORAGE - 50')

AVE. RUNNING SPEED (MPH)	TAPER/DECEL BASED ON A 10 MPH REDUCTION
20	100'
30	160'
40	235'
50	315'
60	435'

TYPICAL MARKINGS FOR SIGNALIZED INTERSECTION

THIS SHEET NOT TO SCALE

OTHER STDS. REQUIRED E-191 E-193

REVISIONS AND CORRECTIONS

AUG. 18, 1995 - DATE OF ORIGINAL ISSUE
OCT. 14, 1998 - CHANGED GORE MARKING DETAIL

APPROVED

DIRECTOR OF PROJECT DEVELOPMENT

PAVEMENT MARKING DETAILS

/trcf/std/std192.dgn/std192.i

VERMONT AGENCY OF TRANSPORTATION

STANDARD

E-192