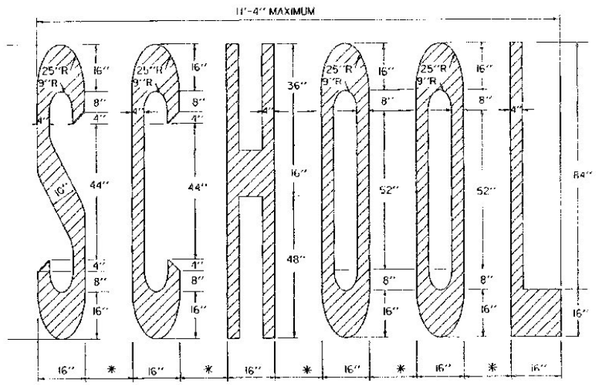

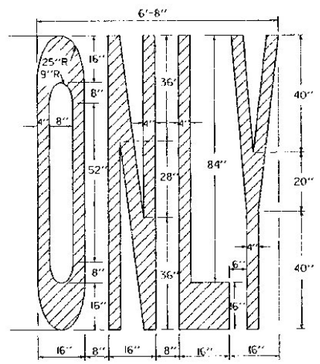

* (4"-8") - ADJUST TO AVAILABLE PAVEMENT WIDTH

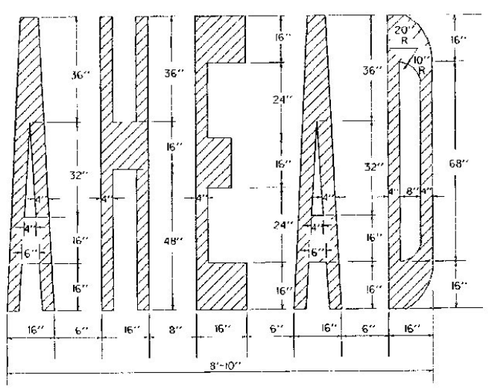

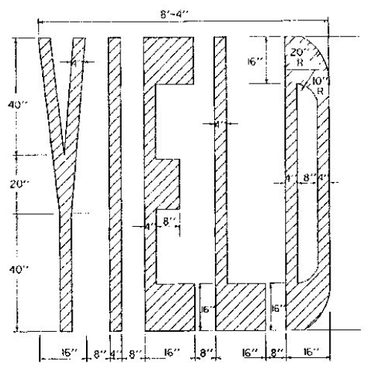

LETTER HEIGHT

DIMENSIONS ARE FOR 8' - 4" LETTER HEIGHTS. A LESSER HEIGHT OF 8' - 0" IS ACCEPTABLE AS LONG AS THE DIMENSIONS ARE PROPORTIONAL TO THE DETAILS SHOWN SEE NOTE BELOW.

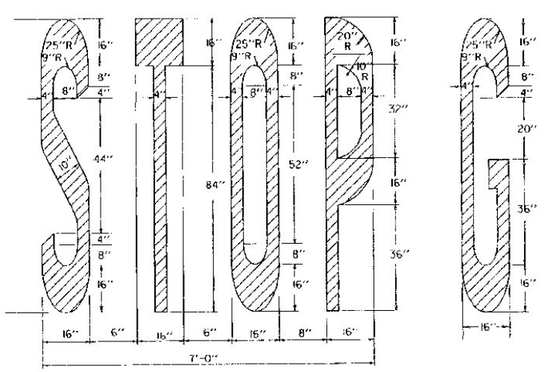

THE LETTER "G" PERTAINS TO THE WORD "SIGNAL" FOR OTHER LETTERS, SEE ABOVE.

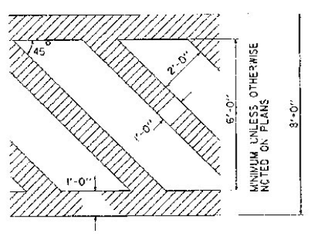

ARROWS AND WORD MARKINGS THAT CONFORM TO THE DIMENSIONS SHOWN ON THIS SHEET OR AS DETAILED IN THE BOOKLET ENTITLED "STANDARD ALPHABETS FOR HIGHWAY SIGNS AND PAVEMENT MARKINGS" AND THE "MANUAL ON UNIFORM TRAFFIC CONTROL DEVICES" (CURRENT EDITION) PREPARED BY THE FEDERAL HIGHWAY ADMINISTRATION WILL BE ACCEPTABLE.

LETTER IN WORD MARKING AND CROSSWALK DETAILS

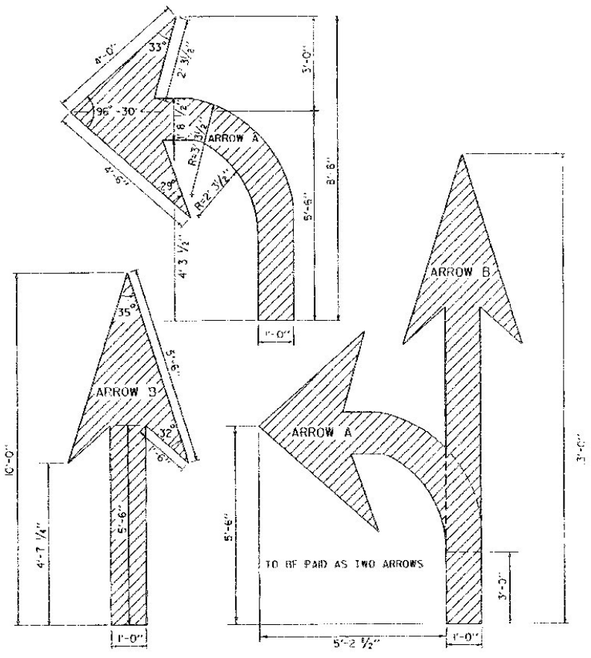

ARROW DETAILS

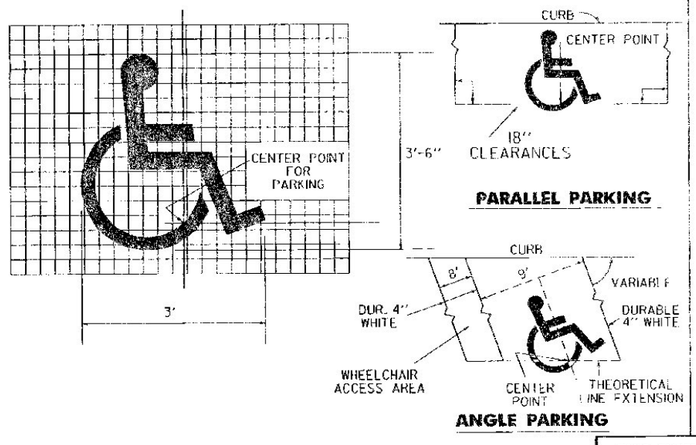

PARALLEL PARKING

ANGLE PARKING

HANDICAPPED PAVEMENT MARKING DETAILS

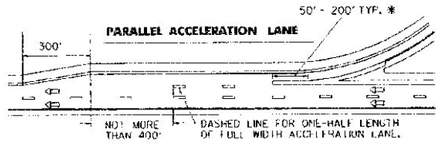

* USE LONGER LENGTH TO EMPHASIZE SITUATIONS WHERE THE CROSSING REQUIRES UNUSUAL CARE SUCH AS HIGH VOLUME MERGE AREAS.

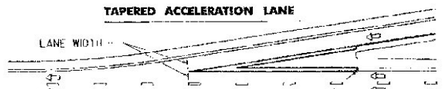

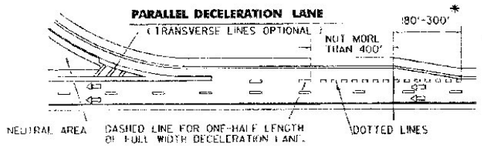

* SHORTER TAPERS GIVE A BETTER TARGET VALUE, HOWEVER ALIGNMENT MAY DICTATE A LONGER TAPER. RESIDENT ENGINEER SHALL ESTIMATE LENGTH.

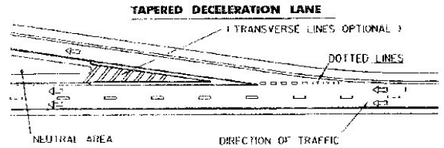

TRANSVERSE LINES SHALL CONSIST OF 8" WHITE LINES SPACED 5'-0" C-C AND SET AT 45° TO MAIN LINE EDGE LINES. THESE MARKINGS SHALL BE USED TO INCREASE VISIBILITY DUE TO DIFFICULT VERTICAL OR HORIZONTAL ALIGNMENT, AS DIRECTED BY THE RESIDENT ENGINEER.

RAMP MARKINGS

LEGEND

- 4" WHITE LINES
- 4" YELLOW LINES
- 8" CHANNELIZATION WHITE LINES
- 4" WHITE DOTTED LINES (2' SOLID - 4' GAP)
- DIRECTION OF TRAFFIC FLOW

IMPORTANT NOTE

ACTUAL LOCATION OF 8" GORE MARKING TRANSITION CURVE MUST BE OFFSET FROM THE THEORETICAL RAMP EXTENSION LINE TO PROVIDE A VISUALLY SMOOTH RAMP ENTRANCE.

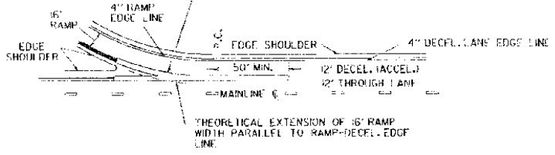

DETAIL - GORE MARKING TRANSITION CURVE

THIS SHEET IS NOT TO SCALE

OTHER STDS. REQUIRED

REVISIONS AND CORRECTIONS

SEPT. 10, 1987 - DATE OF ORIGINAL ISSUE
JAN. 23, 1989 - ADDED DOTTED LINES, "SIGNAL" DIMENSIONS, CLARIFIED LETTER HEIGHT.
AUG. 18, 1995 - MISC. NOTE CHANGES

APPROVED FOR THIS PROJECT AND/OR DESIGN IMPLEMENTATION. FHWA FINAL APPROVAL PENDING.

APPROVED

DIRECTOR OF ENGINEERING

TRAFFIC AND SAFETY ENGINEER

PAVEMENT MARKING DETAILS

/1rcf/std/std191.dgn/std191

VERMONT AGENCY OF TRANSPORTATION

STANDARD E-191