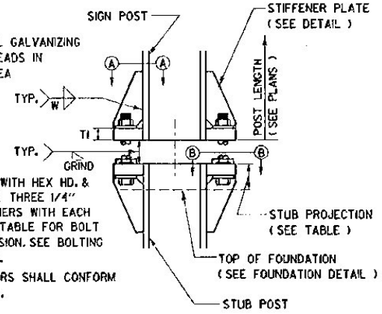

SLIP BASE DETAIL
(ELEVATION)

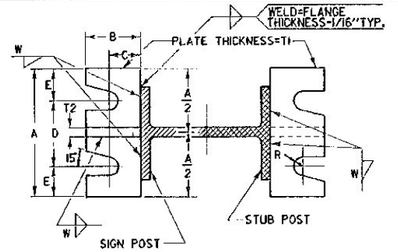

SECTION A-A **SECTION B-B**

(SEE TABLE FOR DIMENSIONS)

SECTIONS SHOWN ARE FOR INSTALLATIONS ON RIGHT SHOULDER AND IN GORE. PLATE SLOT BEVELS ARE OPPOSITE FOR INSTALLATIONS IN THE MEDIAN OF DIVIDED HIGHWAYS AND TWO WAY RAMPS.

SLIP BASE DETAIL
(SECTION)

POST SIZE	BOLT SIZE	A	B	C	D	E	T1	T2	W	R	F	G	H	J	K	L	N	D1	T3	BOLT DIA.	BASE DIA.	BASE DEPTH	MIN. STUB LENGTH	STUB PROJ.	VOLUME OF SINGLE BASE
		BASE CONNECTION DATA TABLE									FUSE PLATE DATA TABLE									FOUNDATION DATA					
W6X9	5/8" Ø X 3 1/2"	5"	2"	1 1/4"	2 3/4"	1 1/8"	3/4"	1/2"	1/4"	11/32"	3 5/8"	2"	1 1/8"	4"	2 1/4"	7/8"	1/2"	9/16"	1/4"	1/2"	24"	6'-0"	3'-0"	2 1/2"	0.70 C.Y.
W6X12																									
W6X15	*										4 3/8"	2 1/2"	1 1/4"	6"	3 1/2"	1 1/4"	5/8"	1 1/16"	3/8"	5/8"					
W8X18											4 3/8"	2 1/2"	1 1/4"	5 1/4"	2 3/4"	1 1/4"	5/8"	1 1/16"	3/8"	5/8"					
W8X21	3/4" Ø X 4 1/2"	6"	2 1/4"	1 3/8"	3 1/2"	1 1/4"	1"	3/4"	5/16"	13/32"	4 3/4"	2 1/2"	1 1/2"	5 1/4"	2 3/4"	1 1/4"	3/4"	13/16"	1/2"	3/4"					
W10X22											5 1/4"	3"	1 1/2"	5 3/4"	2 3/4"	1 1/2"	3/4"	13/16"	1/2"	3/4"					
W10X26	**																								
W12X30		7"			4"	1 1/2"					5 1/4"	3"	1 1/2"	6 1/2"	3 1/2"	1 1/2"	3/4"	13/16"	1/2"	3/4"	30"	6'-6"	3'-0"	2 1/2"	1.2 C.Y.

* 5/8" BOLTS SHALL HAVE A MINIMUM THREAD LENGTH OF 2 INCHES

** 3/4" BOLTS SHALL HAVE A MINIMUM THREAD LENGTH OF 2 1/4 INCHES
THESE BOLTS SHALL BE FURNISHED WITH TWO NUTS FOR EACH BOLT.

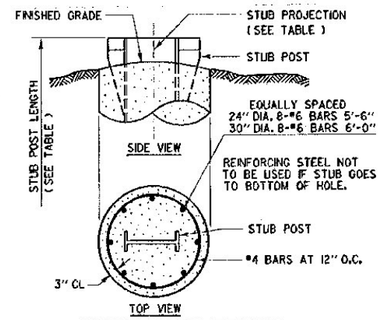

FOUNDATION DETAILS

1. MAKE SURE ALL BOLTS ARE FROM THE SAME STOCK.
2. TRY NUTS ON BOLT THREADS MAKING SURE THEY TURN EASILY.
3. PLACE (3) BOLTS IN "SKIDMORE - WILHELM" DEVICE. TORQUE TO PROPER TENSION IN DEVICE. CALIBRATE TORQUE WRENCH BY CHECKING ON THESE THREE BOLTS WHEN UNDER PROPER TENSION IN DEVICE.
4. USE THE AVERAGE OF THE THREE TORQUES ON SIMILAR BOLTS IN THE REAL SUPPORT.
5. ASSEMBLE POSTS TO STUB WITH BOLTS AND WITH THREE 1/4" FLAT WASHERS. (ONE EACH: UNDER HEAD OF BOLT, BETWEEN PLATES, AND UNDER NUT.)
6. SHIM AS REQUIRED TO PLUMB POST.
7. TIGHTEN ALL BOLTS THE MAXIMUM POSSIBLE WITH A 12" TO 15" WRENCH TO BED WASHERS AND SHIMS AND TO CLEAN BOLT THREADS, THEN LOOSEN EACH BOLT IN TURN AND RETIGHTEN IN A SYSTEMATIC ORDER TO THE PRESCRIBED TENSION.
8. THE BASE PLATE BOLTS WILL BE TORQUED TO PRESCRIBED BOLT TENSION SHOWN BELOW. AFTER THE INITIAL TORQUING USE A SECOND NUT TO INSURE THAT THE FIRST NUT WILL NOT BACK OFF. THE CONTRACTOR WITH THE AGENCY INSPECTOR WILL RETURN TO THE SIGN TWO MORE TIMES AT INTERVALS OF 30 DAYS FOR THE PURPOSE OF CHECKING AND RE-ESTABLISHING THE PRESCRIBED TORQUE. THE SECOND NUT SHALL REMAIN AS A LOCK NUT.
9. THE "SKIDMORE - WILHELM" DEVICE IS AVAILABLE THROUGH THE V.A.O.T. CONSTRUCTION DIVISION.

PROCEDURE FOR ASSEMBLY OF BASE CONNECTION

GENERAL NOTES

1. DESIGN CONFORMS WITH AASHTO STANDARD SPECIFICATIONS FOR STRUCTURAL SUPPORTS FOR HIGHWAY SIGNS, LUMINAIRES, AND TRAFFIC SIGNALS.
2. MATERIAL AND FABRICATION SHALL CONFORM TO THE REQUIREMENTS OF THE STATE OF VERMONT AGENCY OF TRANSPORTATION STANDARD SHEETS AND SPECIFICATIONS.
3. ALL STRUCTURAL STEEL SHALL CONFORM TO AASHTO M 183.
4. ALL STRUCTURAL STEEL, BOLTS NUTS, AND WASHERS SHALL BE GALVANIZED AS PER AASHTO M 232 EXCEPT AS NOTED BELOW.
5. ALL HIGH STRENGTH BOLTS, NUTS, AND WASHERS SHALL BE GALVANIZED AS PER AASHTO M 232. THE POST CUT SHALL BE A SAW CUT ONLY. ALL OTHER CUTS EXCLUDING POST CUTS MAY BE FLAME CUT PROVIDED ALL EDGES ARE GROUND SMOOTH. METAL PROJECTING BEYOND THE PLATE FACE WILL NOT BE PERMITTED. ALL POST HOLES SHALL BE DRILLED.
6. ALL HIGH STRENGTH BOLTS AND NUTS SHALL CONFORM TO AASHTO M 164.
7. ALL 1\4" FLAT WASHERS SHALL CONFORM TO THE HARDNESS REQUIREMENTS FOR AASHTO M 164 WASHERS.
8. PAINT FOR SAW CUT SHALL BE A SINGLE COMPONENT ZINC-RICH COMPOUND YIELDING A DRIED FILM OF AT LEAST 85% PURE ZINC. IT SHALL MEET OR EXCEED THE REQUIREMENT OF VT.1.05 "ZINC RICH COATING".
9. EXTREME CARE SHOULD BE TAKEN TO KEEP THE SLIP JOINT FREE OF ANY FOREIGN MATERIAL, EITHER BY WRAPPING THE JOINT OR THOROUGH CLEANING IMMEDIATELY AFTER POURING OF CONCRETE.
10. ALL FUSE PLATE BOLTS SHALL BE TIGHTENED BY THE FABRICATOR TO THE PRESCRIBED BOLT TENSION SHOWN BELOW. THE CONTRACTOR WILL BE HELD RESPONSIBLE TO CHECK AND CERTIFY THAT THE REQUIRED RESIDUAL TENSIONS ARE OBTAINED.
11. NO MORE THAN 600 LBS. OF POST WILL BE ALLOWED BELOW THE FUSE PLATE.
12. THE AMOUNT OF TORQUE NECESSARY TO ACHIEVE THE PROPER BOLT TENSION FOR BOTH THE "FUSE PLATE" AND THE "SLIP BASE" SHALL BE DETEMINED BY USE OF A SUITABLE TORQUE WRENCH CALIBRATED IN A "SKIDMORE-WELHELM" DEVICE. THE PROCEDURE FOR CALIBRATING THE WRENCH IS OUTLINED IN THE "PROCEDURE FOR ASSEMBLY OF BASE CONNECTION" ON THIS SHEET.
13. DUE TO THE VARIABILITY OF THE GALVANIZATION ON THE BOLTS, NUTS, AND WASHERS, ETC., NO FORMULA OR TABLES SHALL BE USED TO CALCULATE THE REQUIRED CONVERSION FROM BOLT TENSION TO APPLIED TORQUE. UNLESS APPROVED BY TRAFFIC AND SAFETY DIVISION.
14. THE INSPECTION OF THE "FUSE PLATE BOLTS" SHALL BE AS OUTLINED IN THE MOST RECENT EDITION OF AASTHO "STANDARD SPECIFICATIONS FOR HIGHWAY BRIDGES", SECTION 10.17.5 "INSPECTION OF CONNECTIONS USING HIGH STRENGTH BOLTS".
15. INSPECTION OF THE "SLIP BASE BOLTS" SHALL BE AS FOLLOWS: USING A TORQUE WRENCH WHICH HAS BEEN CALIBRATED IN THE "SKIDMOE-WILHELM" DEVICE WITH THREE BOLTS OF THE SAME GRADE, SIZE AND CONDITION AS THOSE UNDER INSPECTION, THE INSPECTOR SHALL SET THE WRENCH FOR MAXIMUM SETTING SHOWN BELOW FOR "SLIP BASE BOLTS" AND TEST ALL "SLIP BASE BOLTS" IN EACH ASSEMBLY.
    A) IF THE BOLT BEING TESTED TURNS MORE THAN 5° UPON APPLICATION OF THE WRENCH SET TO THE MAXIMUM, THE INSPECTOR SHALL SET THE WRENCH TO THE MINIMUM AND RETEST THE BOLT. IF THE BOLT TURNS LESS THAN 5° UPON APPLICATION OF THE WRENCH SET TO MINIMUM, IT SHALL BE CONSIDERED ACCEPTABLE. IF THE BOLT TURNS MORE THAN 5° UPON APPLICATION OF THE WRENCH SET TO MINIMUM, IT SHALL BE TIGHTENED AT LEAST TO THE MINIMUM.
    B) IF THE BOLT BEING TESTED TURNS LESS THAN 5° UPON APPLICATION OF THE WRENCH SET TO MAXIMUM, IT SHALL BE LOOSENED AND RETIGHTENED SO THAT IT FALLS WITHIN THE RANGE SPECIFIED AND REINSPECTED AS OUTLINED ABOVE.
16. BOLT TENSIONS

FUSE PLATE BOLTS

BOLT SIZE	MIN. BOLT TENSION	MAX. BOLT TENSION
1/2" DIA.	12000 LBS.	15000 LBS.
5/8" DIA.	19200 LBS.	24500 LBS.
3/4" DIA.	28400 LBS.	36000 LBS.

SLIP BASE BOLTS

BOLT SIZE	MIN. BOLT TENSION	MAX. BOLT TENSION
5/8" DIA.	1740 LBS.	2660 LBS.
3/4" DIA.	2400 LBS.	3600 LBS.

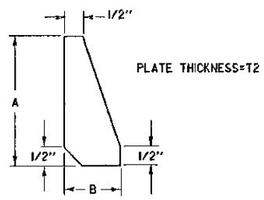

STIFFENER PLATE
(SEE TABLE FOR DIMENSIONS)

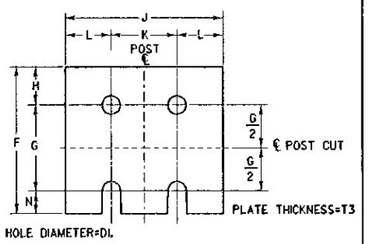

USE H. S. BOLTS WITH HEX. HD. AND HEX. NUTS, ONE 1/4" THICK FLAT WASHERS UNDER EACH BOLT HEAD, AND ONE 1/4" THICK WASHER UNDER NUT.
1/4" WASHERS SHALL CONFORM TO NOTE 7.

FUSE PLATE
(SEE TABLE FOR DIMENSIONS)

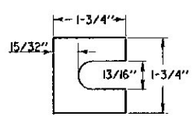

FURNISH TWO .012"± THICK AND TWO .032" ± THICK SHIMS PER POST. SHIMS SHALL BE FABRICATED FROM BRASS SHIM STOCK OR STRIP CONFORMING TO A.S.T.M. B-36.

SHIM DETAIL

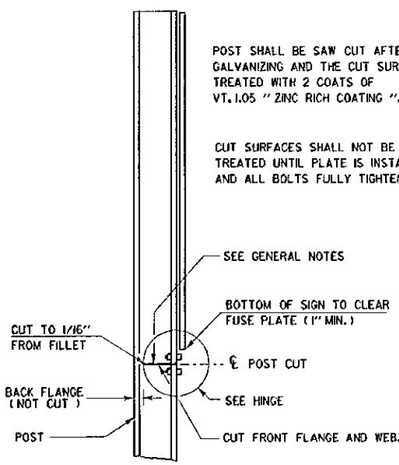

FUSE PLATE-POST DETAIL

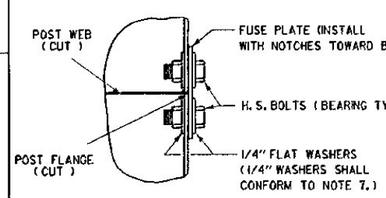

FUSE PLATE "HINGE" DETAIL
(SEE NOTE 11)

FLANGE HOLES FOR HINGE SHALL BE DRILLED

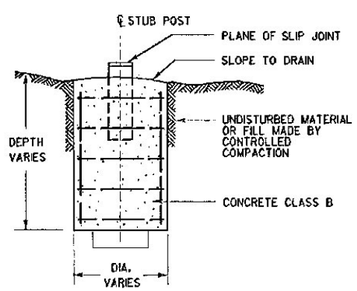

FLAT GROUND FOUNDATION DETAILS

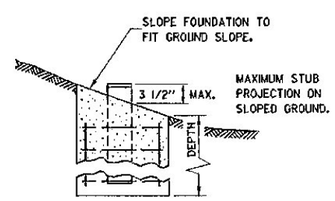

SLOPING GROUND FOUNDATION DETAILS

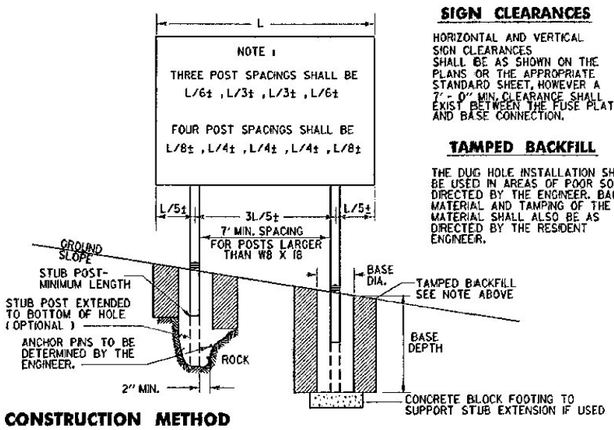

CONSTRUCTION METHOD

HOLES FOR POST FOOTINGS MAY BE AUGERED OR DUG. THE HOLES MAY BE LEFT WITH EARTH SIDES, IF THE MATERIAL IS FIRM, AND ALL DISTURBED SOIL AROUND THE CURCUMFRENCE OF THE AUGERED HOLE IS REMOVED. IF NOT, A SUITABLE FORM APPROVED BY THE ENGINEER SHALL BE USED. CORRUGATED METAL CULVERT PIPE OR PAPER FORMS MANUFACTURED FOR USE AS CONCRETE COLUMN FORMS WILL BE ACCEPTABLE. IF THE STUB IS EXTENDED TO THE BOTTOM OF THE HOLE, A CONCRETE BLOCK FOOTING SHALL BE UTILIZED TO SUPPORT THE POST AND THE POST SHALL BE HELD SECURELY IN PLACE AT THE BOTTOM. THIS MAY BE DONE BY EMBEDDING THE POST AND CONCRETE BLOCK FOOTING IN WET CONCRETE AND ALLOWING TO SET WITH THE POST SECURED IN POSITION, PLUMBED AND PROPERLY BRACED. THE REMAINING FOOTING MAY BE POURED. THE TIME BETWEEN POURS FOR THE CURING OF THE CONCRETE SHALL BE AS DETERMINED BY THE ENGINEER. NO PART OF THE FORM SHALL SHOW ABOVE THE GROUND LINE WHEN THE WORK IS COMPLETED.

SIGN CLEARANCES

HORIZONTAL AND VERTICAL SIGN CLEARANCES SHALL BE AS SHOWN ON THE PLANS OR THE APPROPRIATE STANDARD SHEET, HOWEVER A 7'-0" MIN. CLEARANCE SHALL EXIST BETWEEN THE FUSE PLATE AND BASE CONNECTION.

TAMPED BACKFILL

THE DUG HOLE INSTALLATION SHALL BE USED IN AREAS OF POOR SOIL AS DIRECTED BY THE ENGINEER. BACKFILL MATERIAL AND TAMPING OF THE MATERIAL SHALL ALSO BE AS DIRECTED BY THE RESIDENT ENGINEER.

REVISIONS AND CORRECTIONS

MARCH 4, 1988 - FHWA COMMENTS

JUNE 21, 1989 - FHWA - CHANGE TO 7' FUSE PLATE CLEARANCE

APPROVED SEPT. 10, 1987
DATE

David B. Kelley
CHIEF ENGINEER

Arthur Gore
DIRECTOR OF PLANNING AND PRECONSTRUCTION

Gordon B. MacArthur
TRAFFIC AND SAFETY ENGINEER

W-SHAPED STEEL SIGN POST

VERMONT AGENCY OF TRANSPORTATION

STANDARD
E-161