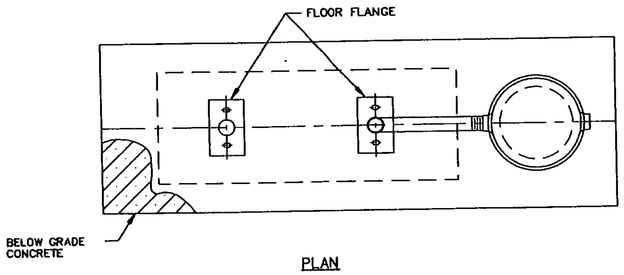

PLAN

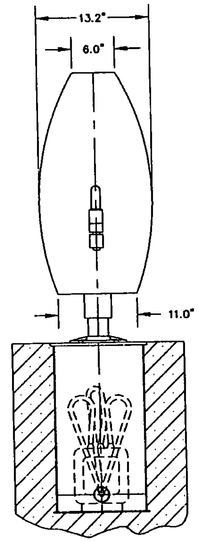

SECTION A–A

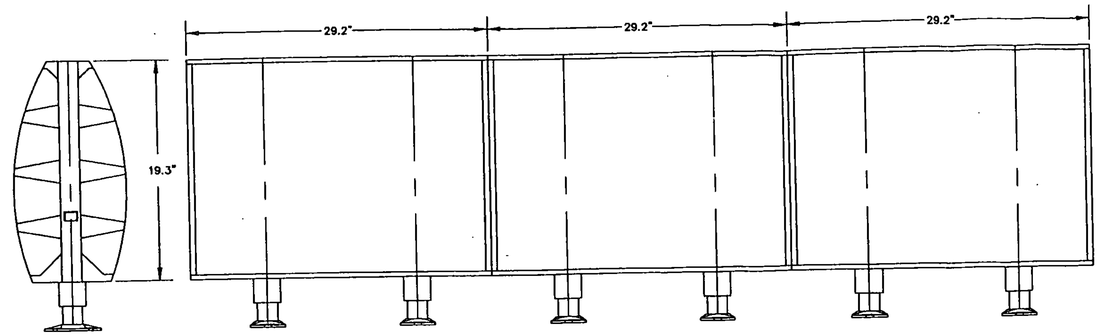

MULTIPLE PANEL TAXIWAY SIGN
N.T.S.

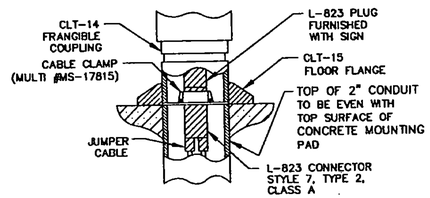

ELECTRICAL CONNECTION DETAIL
N.T.S.

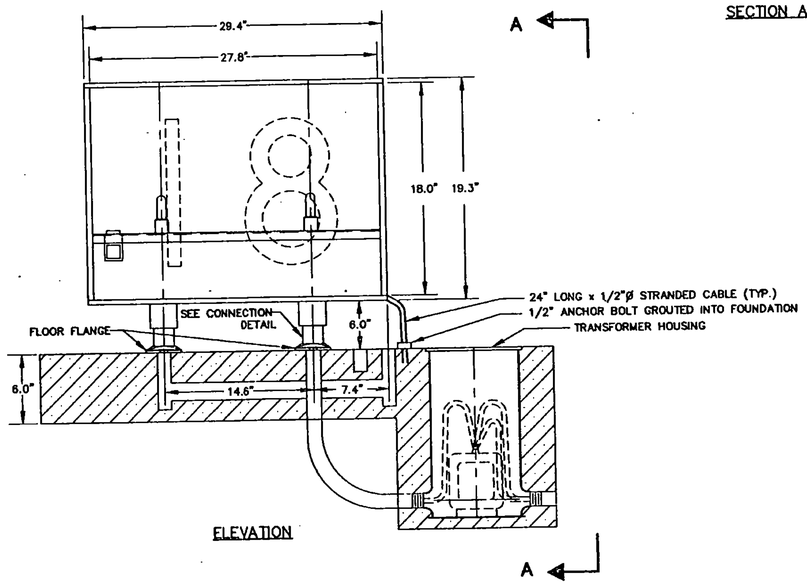

ELEVATION

SINGLE PANEL TAXIWAY SIGN
N.T.S.

NOTE:
ALL TAXIWAY SIGNS ARE LUMACURVE TAXIWAY GUIDANCE SIGNS OR APPROVED EQUAL.

SEAL

REVISION	DESCRIPTION	DRAWN BY	CHECKED BY	APPR. BY	DATE

PROJECT NO. 7804

Envirodyne Engineers, Inc.
41 East 42nd St. Suite 1015
New York, NY 10017

DATE: AUG. 23, 1993 | DESIGNED BY: F.S. | DRAWN BY: D.W. | CHECKED BY: L.G.

NOT TO SCALE

RUTLAND STATE AIRPORT
CLARENDON, VERMONT

TAXIWAY E

ELECTRICAL DETAILS

DRAWING NO.
L4

SHEET 20 OF 41