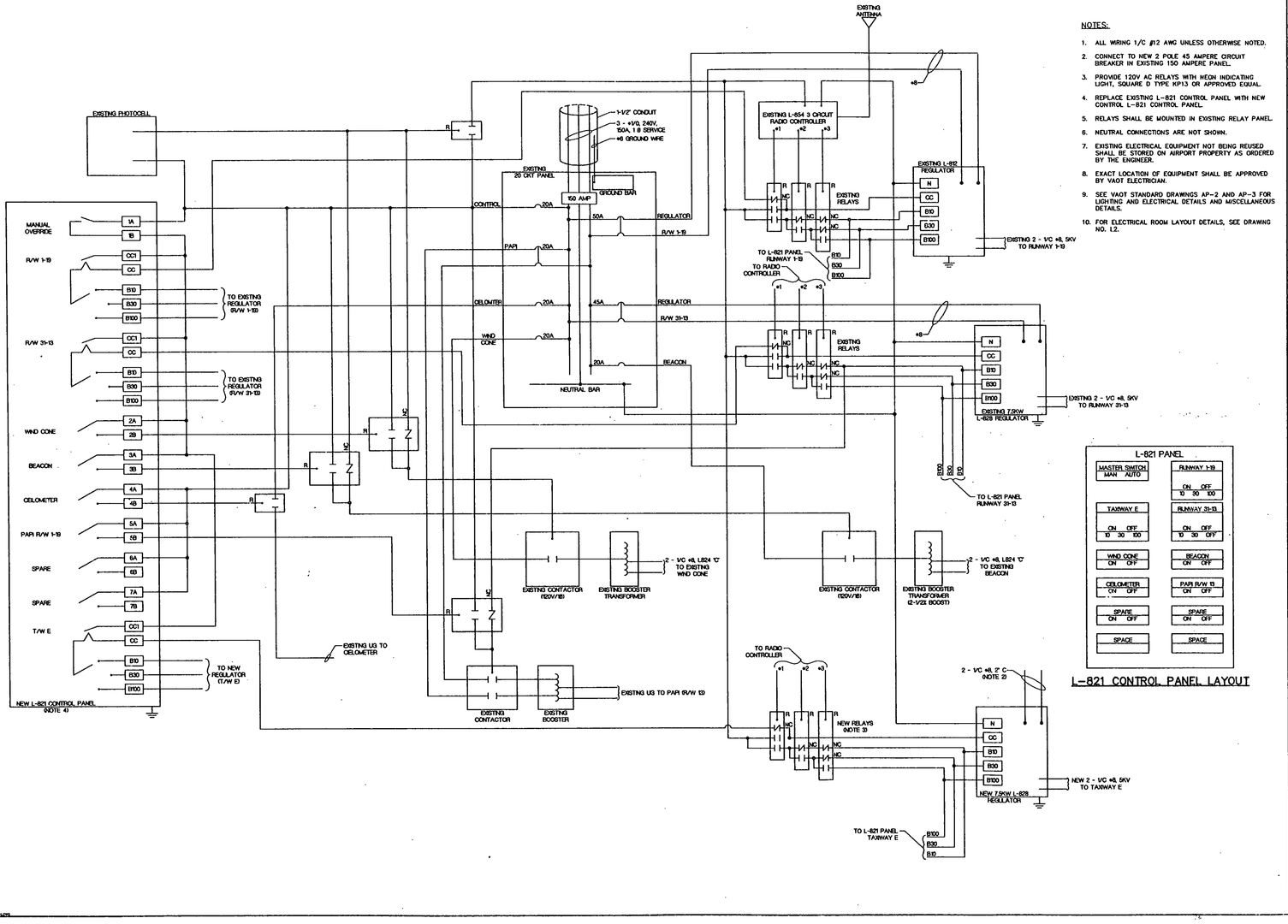

NOTES:

1. ALL WIRING 1/C #12 AWG UNLESS OTHERWISE NOTED.
2. CONNECT TO NEW 2 POLE 45 AMPERE CIRCUIT BREAKER IN EXISTING 150 AMPERE PANEL.
3. PROVIDE 120V AC RELAYS WITH NEON INDICATING LIGHT, SQUARE D TYPE KP13 OR APPROVED EQUAL.
4. REPLACE EXISTING L-821 CONTROL PANEL WITH NEW CONTROL L-821 CONTROL PANEL.
5. RELAYS SHALL BE MOUNTED IN EXISTING RELAY PANEL.
6. NEUTRAL CONNECTIONS ARE NOT SHOWN.
7. EXISTING ELECTRICAL EQUIPMENT NOT BEING REUSED SHALL BE STORED ON AIRPORT PROPERTY AS ORDERED BY THE ENGINEER.
8. EXACT LOCATION OF EQUIPMENT SHALL BE APPROVED BY VAOT ELECTRICIAN.
9. SEE VAOT STANDARD DRAWINGS AP-2 AND AP-3 FOR LIGHTING AND ELECTRICAL DETAILS AND MISCELLANEOUS DETAILS.
10. FOR ELECTRICAL ROOM LAYOUT DETAILS, SEE DRAWING NO. L2.

SEAL

REVISION	DESCRIPTION	DRAWN BY	CHECKED BY	DATE

PROJECT NO. 7804

Envirodyne Engineers, Inc.
41 East 42nd St. Suite 1015
New York, NY 10017

DRAWN BY: D.W.
CHECKED BY: L.C.
DESIGNED BY: F.S.
DATE: AUG. 21, 1993
NOT TO SCALE

RUTLAND STATE AIRPORT
CLARENDON, VERMONT

TAXIWAY E

ELECTRICAL DETAILS

DRAWING NO.
L3

SHEET 19 OF 41